SERVICE MANUAL

SAAB

SAAB 95, 96 AND
MONTE CARLO
YEAR MODEL 1967, 1968, 1969, 1970–

Ordering No. 788626

SAAB–SCANIA
automotive group

TROLLHÄTTAN SWEDEN

FOREWORD

This Service Manual has been prepared to aid SAAB service shops in their work and to contribute towards the attainment of the best results. The recommendations and instructions given in the Manual are based on our accumulated experience up to date. As further experience is gained, or if design modifications are introduced, all SAAB general agents and service shops will be informed accordingly, either through Service Information Bulletins or through complementary pages for the loose-leaf edition of the Service Manual. The Service Information Bulletins should be kept in a special binder, while complementary manual pages should be inserted in the appropriate position according to their chapter, section and page numbers.

The Service Manual, the Repair Timetable and the Spare Parts List are arranged in the same order as the Repair Timetable issued by the Swedish Automobile Servicing and Retailing Employers' Association. This arrangement in similar groups facilitates the use of the different publications.

Description

This comprises a brief description of the design and construction, intended primarily for those wishing to become more familiar with the construction and function of the car.

Shop instructions

Technical data such as dimensions, tolerances, torque ratings, etc., will be found in chapter O. These sections include detailed descriptions of all service jobs and are primarly intended for servicemen who are not familiar with work on the Saab. They include plenty of illustrations, in the belief that a good picture is often more instructive than a lengthy explanation.

SAAB–SCANIA AUTOMOTIVE GROUP
Car Division
TROLLHÄTTAN SWEDEN

Nov. 1970

Produced and edited by Technical Publications
SAAB–SCANIA, Trollhättan, Sweden

Nov. 1970

CONTENTS

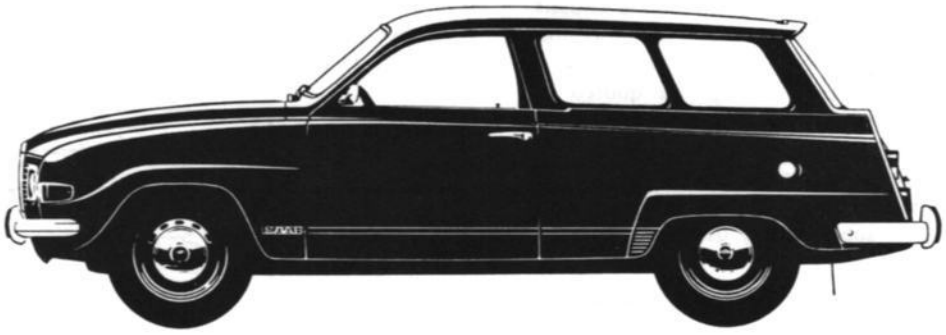

SAAB 95 (SAAB STATION WAGON)

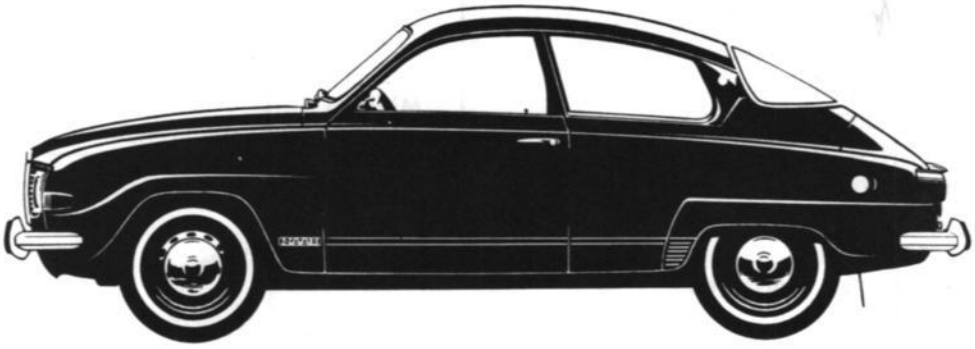

SAAB 96 (SAAB 2 DOOR SEDAN)

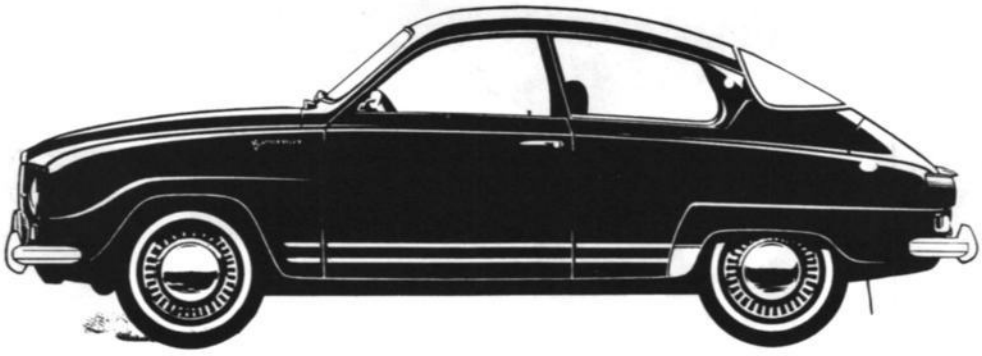

SAAB MONTE CARLO

S 2967

CHASSIS AND ENGINE NUMBERS

The illustrations below show the locations of the chassis and engine numbers. To ensure correct identification in the case of a particular car or engine, these numbers, together with the mileage, must always be quoted in warranty claims, etc. If a service engine is fitted in a car, the number of the original engine must, without fail, be stamped in the appropriate place. This is of the utmost importance if customs difficulties are to be avoided in the event that the car is subsequently used in a country other than that of registration.

Chassis number limits for different year models:

SAAB 95 1967	42001– 50197
SAAB 95 1968	52001– 62059
SAAB 95 1969	65001– 74986
SAAB 95 1970	80001—88371
SAAB 95 1971	95001—
SAAB 96 1967	420001–458526
SAAB 96 1968	470001–507018
SAAB 96 1969	520001–552859
SAAB 96 1970	560001—592844
SAAB 96 1971	600001—
Monte Carlo 1967	420001–458526
Monte Carlo 1968	470001–507018

CARS MADE IN FINLAND

SAAB 95 1970	50600001 – 50600838
SAAB 95 1971	51600001 –
SAAB 96 1970	60600001 – 60601540
SAAB 96 1971	61600001 –

GENERAL TIGHTENING TORQUES

Normal tightening torques for standard bolts and nuts. For special nuts and bolts see the technical data for the appropriate section.

Size	Wrench torques	
	kpm	ft.-lb.
1/4"	0,7— 1,0	5—7
5/16"	1,5—2,5	11—18
3/8"	2,5— 4,0	18—28
7/16"	4,0— 7,0	28—50
1/2"	7,0—10,0	50—72
9/16"	10,0—14,0	72—100
5/8"	14,0—20,0	100—145

Size	Wrench torques	
	kpm	ft.-lb.
M6×1	0,8—1,2	6—9
M8×1	1,6—2,5	12—18
M8×1,25	1,6—2,0	12—15
M10×1,5	3,5—4,3	26—31
M10×1	4,4—5,2	32—38
M12×1,5	7,6—9,0	55—65
M12×1,75	6,9—8,3	50—60

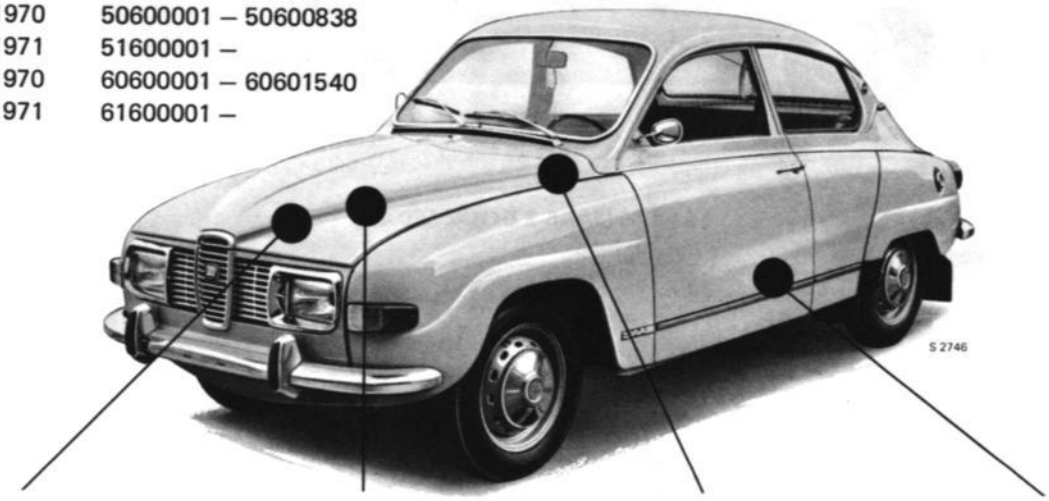

Engine number

Gearbox number

Color code and chassis number signs

Chassis number imprinted in car body

The type designations are 96 V4 for the SAAB V4 passenger car and 95 V4 for the SAAB V4 station wagon.

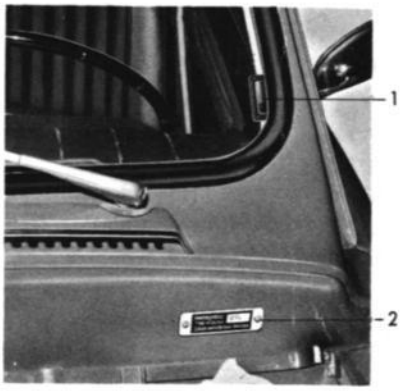

LOCATION OF CHASSIS NUMBER AND PAINT COLOR CODE SIGNS, USA-CARS FROM MODEL 1969

1. Chassis number sign
2. Paint color code sign

GENERAL DATA Model 1967–1968

	SAAB 95	SAAB 96	MONTE CARLO
Overall length, including bumpers (approx.)	14 ft. 0 in. (4270 mm)	13 ft. 8 in. (4170 mm)	13 ft. 8 in. (4170 mm)
Overall width	5 ft. 2 in. (1580 mm)	5 ft. 2 in. (1580 mm)	5 ft. 2 in. (1580 mm)
Overall height, unladen (approx.)	4 ft. 10 in. (1470 mm)	4 ft. 10 in. (1475 mm)	4 ft. 10 in. (1475 mm)
Ground clearance (2 people front) (approx.)	5.1 in. (130 mm)	5.1 in. (130 mm)	5.1 in. (130 mm)
Track, front and rear	4 ft. 0 in. (1220 mm)	4 ft. 0 in. (1220 mm)	4 ft. 0 in. (1220 mm)
Wheelbase	8 ft. 2 in. (2498 mm)	8 ft. 2 in. (2498 mm)	8 ft. 2 in. (2498 mm)
Turning radius (approx.)	17 ft. 5 in. (5.3 m)	17 ft. 5 in. (5.3 m)	17 ft. 5 in. (5.3 m)
Empty weight, incl. fuel, water, tools and spare wheel	2080 lb. approx. (945 kg)	1940 lb. (880 kg)	2000 lb. (910 kg)
Total weight, incl. permissible passengers and luggage	3370 lb. (1530 kg)	2880 lb. (1300 kg)	2880 lb. (1300 kg)
Weight distribution:			
Empty	front 57 %	front 62 %	front 61 %
Fully laden, incl. passengers and luggage	front 44 %	front 52 %	front 51 %
Number of seats	7	5	2+2
Available load luggage space	39 cu. ft. (1.1 m³)	13 cu. f.t (0.37 m³)	13 cu. ft. (0.37 m³)
Loading area with driver +4 passengers	39.4 x 37.4 in. (1000 x 950 mm)	39.4 x 37.4 in. (1000 x 950 mm)	39.4 x 37.4 in. (1000 x 950 mm)
Loading area with driver +1 passenger	63 x 37.4 in. (1600 x 950 mm)	– –	– –
Trunk height	31.4 in. (800 mm)	18.1 in. (460 mm)	18.1 in. (460 mm)

GENERAL DATA Model 1969

	SAAB 95	SAAB 96
Overall length, including bumpers (approx.)	14 ft. 1 in. (4300 mm)	13 ft. 9 in. (4200 mm)
Overall width	5 ft. 2 in. (1580 mm)	5 ft. 2 in. (1580 mm)
Overall height, unladen (approx.)	4 ft. 10 in. (1470 mm)	4 ft. 10 in. (1475 mm)
Ground clearance (2 people front) (approx.)	5.1 in. (130 mm)	5.1 in. (130 mm)
Track, front and rear	4 ft. 0 in. (1220 mm)	4 ft. 0 in. (1220 mm)
Wheelbase	8 ft. 2 in. (2498 mm)	8 ft. 2 in. (2498 mm)
Turning radius (approx.)	17 ft. 9 in. (5.4 m)	17 ft. 9 in. (5.4 m)
Empty weight, incl. fuel, water, tools and spare wheel	2160 lb. approx. (980 kg)	2000 lb. (910 kg)
Total weight, incl. permissible passengers and luggage	3370 lb. (1530 kg)	2880 lb. (1300 kg)
Weight distribution:		
Empty	front 57 %	front 62 %
Fully laden, incl. passengers and luggage	front 44 %	front 52 %
Number of seats	7	5
Available load luggage space	39 cu. ft. (1.1 m³)	13 cu. f.t (0.37 m³)
Loading area with driver +4 passengers	39.4 x 37.4 in. (1000 x 950 mm)	39.4 x 37.4 in. (1000 x 950 mm)
Loading area with driver +1 passenger	63 x 37.4 in. (1600 x 950 mm)	– –
Trunk height	31.4 in. (800 mm)	18.1 in. (460 mm)

GENERAL DATA Model 1970

	SAAB 95	SAAB 96
Overall length, including bumpers (approx.)	14 ft. 1 in. (4300 mm)	13 ft. 9 in. (4200 mm)
Overall width	5 ft. 2 in. (1580 mm)	5 ft. 2 in. (1580 mm)
Overall height, unladen (approx.)	4 ft. 10 in. (1490 mm)	4 ft. 10 in. (1490 mm)
Ground clearance (2 people front) (approx.)	5.1 in. (130 mm)	5.1 in. (130 mm)
Track, front and rear	4 ft. 0 in. (1220 mm)	4 ft. 0 in. (1220 mm)
Wheelbase	8 ft. 2 in. (2498 mm)	8 ft. 2 in. (2498 mm)
Turning radius (approx.	17 ft. 6 in. (5.4 m)	17 ft. 6 in. (5.4 m)
Empty weight, incl. fuel, water tools and spare wheel	2150 lb. approx. (975 kg)	2000 lb. (905 kg)
Total weight, incl. permissible passengers and luggage	3395 lb. (1540 kg)	2990 lb. (1350 kg)
Weight distribution:		
Curb weight incl. driver	front 58 %	front 62 %
Total weight	front 45 %	front 51 %
Max. roof load	220 lb. (100 kg)	220 lb. (100 kg)
Max. trailer weight	2000 lb. (910 kg)	2000 lb. (910 kg)
Number of seats	7	5
Available load luggage space	39 cu. ft. (1.1 m^3)	13 cu. ft. (0.37 m^3)
Loading area with driver + 4 passengers	39.4 x 37.4 in. (1000 x 950 mm)	39.4 x 37.4 in. (1000 x 950 mm)
Loading area with driver + 1 passenger	63 x 37.4 in. (1600 x 950 mm)	60.5 x 37.4 in. (1540 x 950 mm)
Trunk height	31.4 in. (800 mm)	18.1 in. (460 mm)

GENERAL DATA Model 1971–

	SAAB 95	SAAB 96
Overall length, including bumpers (approx.)	14 ft. 1 in. (4300 mm)	13 ft. 9 in. (4200 mm)
Overall width	5 ft. 2 in. (1580 mm)	5 ft. 2 in. (1580 mm)
Overall height, unladen (approx.)	4 ft. 10 in. (1490 mm)	4 ft. 10 in. (1490 mm)
Ground clearance (2 people front) (approx.)	5.1 in. (130 mm)	5.1 in. (130 mm)
Track, front and rear	4 ft. 0 in. (1220 mm)	4 ft. 0 in. (1220 mm)
Wheelbase	8 ft. 2 in. (2498 mm)	8 ft. 2 in. (2498 mm)
Turning radius (approx.	17 ft. 6 in. (5.4 m)	17 ft. 6 in. (5.4 m)
Empty weight, incl. fuel, water tools and spare wheel	2.200 lb. approx. (1000 kg)	2000 lb. (920 kg)
Total weight, incl. permissible passengers and luggage	3395 lb. (1540 kg)	2990 lb. (1350 kg)
Weight distribution:		
Curb weight incl. driver	front 58 %	front 62 %
Total weight	front 46 %	front 52 %
Max. roof load	220 lb. (100 kg)	220 lbs. (100 kg)
Max. trailer weight	2000 lb. (910 kg)	2000 lb. (910 kg)
Number of seats	7	5
Available load luggage space	39 cu. ft. (1.1 m^3)	13 cu. ft. (0.37 m^3)
Loading area with driver + 4 passengers	39.4 x 37.4 in. (1000 x 950 mm)	39.4 x 37.4 in. (1000 x 950 mm)
Loading area with driver + 1 passenger	63 x 37.4 in. (1600 x 950 mm)	60.5 x 37.4 in. (1540 x 950 mm)
Trunk height	31.4 in. (800 mm)	18.1 in. (460 mm)

ENGINE

General data

		USA CARS AS FROM MODEL 1971
Engine, type V4	4-stroke, 4 cylinders	4-stroke, 4 cylinders
Power DIN at 4700 rpm	65 bhp	65 bhp
Max torque at 2500 rpm	85 ft.-lb. (11.7 kpm)	85 ft.-lb. (11.7 kpm)
Compression ratio, nominal	9.0:1	8,0:1
Number of cylinders	4	4
Cylinder bore	3.54 in. (90 mm)	3.54 in. (90 mm)
Stroke	2.32 in. (58.86 mm)	2,63 in. (66,8 mm)
Cylinder volume	91.4 cu. in. (1498 cc)	104 cu. in. (1698 cc.)
Firing order	1—3—4—2	1—3—4—2
Placement of cylinders (from front of car):		
Right hand side	1—2	1—2
Left hand side	3—4	3—4
Idling speed	800—900 rpm	900 rpm
Engine suspension	3-point suspension	3-point suspension
Weight, incl. electr. equipment and carburetor	265 lb. (120 kg)	265 lb. (120 kg)

Cylinder block

Type	60° Vee formation, block and crankcase casted in one piece
Material	Cast iron of a special alloy
Number of main bearings	3
Cylinder block bores for camshaft bushings:	front: 44.65—44.68 mm
	center: 44.27—44.30 mm
	rear: 43.89—43.92 mm
Cylinder block bores for balance shaft bushings:	front: 54.420—54.445 mm
	rear: 57.620—57.645 mm
Cylinder bore:	
Standard	90.030—90.040 mm
Oversize 0.02 in. (0,5 mm)	90.530—90.540 mm
Oversize 0.04 (1,0 mm)	91.030—91.040 mm
Diameter main bearing bore:	red 60.62—60.63 mm
	blue 60.63—60.64 mm
Thrust bearing width:	22.61—22.66 mm

Pistons

Material	Aluminium
Number of piston rings, on each piston	2 compression and 1 oil control ring (tripartite)
Permissible difference in weight (piston and connecting rod) in one and the same engine	0.46 oz. (13 g)
Piston-ring groove width:	upper 2.030—2.055 mm
	center 3.030—3.056 mm
	lower 5.017—5.042 mm
Piston diameter: (The piston is out-of-round and spherical)	Standard 89.978—90.002 mm
	oversize 0,5 90.478—90.502 mm
	oversize 1,0 90.978—91.002 mm
Piston clearance	0.0011 in.—0.0024 in.
	0.03—0.06 mm
Piston, removal	From the upper side of the cylinder block
Position of the piston	The jag to be turned forward

Piston and connecting rod must not be separated. Therefore, only piston with connecting rod mounted is available as a spare part.

Piston rings

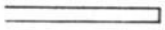

Upper compression ring (chrome plated)

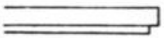

Lower compression ring

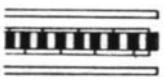

Segment
Center spring } Oil control ring
Segment

S 1267

Upper compression ring:	
Thickness	1.978—1.990 mm
Width	0.15 in. max. (max. 3.76 mm)
Piston-ring clearance in groove	0.0394—0.077 mm
Gap in position	0.250—0.500 mm
Lower compression ring:	
Thickness	2.978—2.990 mm
Width	0.15 in. max. (max. 3.76 mm)
Piston ring play (in groove)	0.040—0.078 mm
Gap in position	0.250—0.500 mm
Oil control ring (tripartite):	
Thickness (total)	4.839—4.991 mm
Width (segment)	3.430—3.580 mm
Piston ring play in groove (total)	0.026—0.203 mm
Gap in position (Segment)	0.380—1.400 mm

Connecting rods

Bore diameter in the big-end	red	56.820—56.830 mm
	blue	56.830—56.840 mm
Vertical inner diameter of fitted con-rod bearing inserts:		
	standard blue	54.004—54.034 mm
	red	54.014—54.044 mm
	undersize 0,05	53.943—53.983 mm
	0,25	53.760—53.800 mm
	0,50	53.506—53.546 mm
	0,75	53.252—53.292 mm
	1,00	52.998—53.038 mm
Diameter of crank pins:	standard blue	53.99 —53.98 mm
	red	54.00 —53.99 mm
	undersize 0,05	53.929—53.919 mm
	0,25	53.476—53.736 mm
	0,50	53.492—53.482 mm
	0,75	53.238—53.228 mm
	1,00	52.984—52.974 mm
Journal clearance in main bearing:	standard	0.014—0.054 mm
	undersize	0.014—0.064 mm

Crankshaft

Crank pin diameter		see above
Number of main bearings		3
Main bearing diameter	standard red	57.000—56.990 mm
	blue	56.990—56.980 mm
	undersize 0,05	56.929—56.919 mm
	0,25	56.746—56.736 mm
	0,50	56.492—56.482 mm
	0,75	56.238—56.228 mm
	1,00	55.984—55.974 mm

Vertical inner diameter of fitted main bearing inserts:	standard blue	57.004—57.020 mm
	red	57.014—57.030 mm
	undersize 0,25	56.760—56.776 mm
	0,50	56.506—56.522 mm
	0,75	56.252—56.268 mm
	1,00	55.998—56.014 mm
Clearance between insert and crank pin:	standard	0.012—0.048 mm
	undersize	0.014—0.058 mm
Thrust journal length (center main bearing)		26.44—26.39 mm
Crankshaft end play		0.102—0.203 mm
Thrust (axial) bearing insert width		26.29—26.24 mm

Balance shaft

Number of bearings		2
Clearance in bushing:	front	0.02 —0.08 mm
	rear	0.03 —0.07 mm
Balance shaft end float		0.05 —0.15 mm
Inner diameter of bushings:	front	50.85—50.88 mm
	rear	54.03—54.05 mm
Bearing diameter of balance shaft:	front	50.83—50.80 mm
	rear	54.00—53.98 mm
Bachlash, new drive gear		0.05—0.14 mm
Backlash, wearing limit		0.40 mm

Camshaft

Number of bearings:		3
Insert diameter:	front	41.516—41.542 mm
	center	41.135—41.161 mm
	rear	40.754—40.780 mm
Bearing clearance	all	0.077—0.0025 mm
Inner diameter of bushings:	front	41.587—41.593 mm
	center	41.186—41.212 mm
	rear	40.805—40.831 mm
Camshaft end float		0.025—0.076 mm
Spacer thickness	red	4.064—4.089 mm
	blue	4.089—4.114 mm
Camshaft drive		gear pinion
Number of teeth on pinion		34
Number of teeth on camshaft gear		68
Backlash, new drive gear		0.05—0.20 mm
Backlash, wearing limit		0.40 mm
Cam lift		0.256 in. (6.490 mm)
Cam heel-to-toe dimension:		34.201—33.998 mm

Valve mechanism

Angle of seat (cylinder head) intake and exhaust		45°
Seat width, intake and exhaust		0.059—0.070 in. (1.5—1.7 mm)
Stem diameter:		
Intake	standard	8.043—8.025 mm
	oversize	8.243—8.225 mm
		8.443—8.425 mm
		8.643—8.625 mm
		8.843—8.825 mm
Exhaust	standard	8.017—7.999 mm
	oversize	8.217—8.199 mm
		8.417—8.399 mm
		8.617—8.599 mm
		8.817—8.799 mm

Stem bore in cylinder head intake and exhaust:		8.063—8.088 mm
Clearance between stem and guide	intake	0.020—0.063 mm
	exhaust	0.046—0.089 mm
Disc diameter	intake	1.46 in. (37 mm)
	exhaust	1.26 in. (32 mm)
Valve lift		0.38 in. (9,7 mm)
Valve clearance, cold engine:		
Intake		0.014 in. (0,35 mm)
Exhaust		0.016 in. (0,40 mm)

	MODEL 1967	AS FROM MODEL 1968	MONTE CARLO
Free length of springs	1,78 in. (45,2 mm)	1,91 in. (48,5 mm)	1,85 in. (47,0 mm)
Fully compressed	1.13 in. (28,6 mm)	1.13 in. (28,6 mm)	1.06 in. (27,0 mm)
Load for compression to 1.59 in. (40.26 mm):	39—47 lbs. (17,8—21,5 kp)	60—68 lbs. (27,2—30,8 kp)	59—66 lbs. (27,0—30,0 kp)

Valve tappet diameter	22.202—22.190 mm
Clearance between tappet and bore	0.023—0.060 mm

Valve timing

Intake opens	21° BTDC	measured at a valve play of 0.425 mm
Intake shuts	82° ATDC	
Exhaust opens	63° BTDC	
Exhaust shuts	40° ATDC	

Lubrication system

Type	Circulation system lubrication under pressure Oil pump of rotor type
Pressure lubricated bearings	Camshaft, crankshaft, balance shaft, connecting rods, rocker arms
Splash lubrication	Piston pins and cylinder walls
Transmission gear, lubrication	Oil spraying
Oil filter, type	"Full-flow" type
Crankcase ventilation, semi enclosed	From the oil filler cap via crankcase to the air filter
Crankcase ventilation, totally enclosed	From air filter via crankcase and NOVO-valve to inlet manifold.

Oil type	Engine oil	SAE 10W 30	Fords spec. ESE—M2C—101B
	alt.	SAE 10W 40	
	Winter, constant temperature below —4°F=20°C	SAE 5W 20	

Warning! This grade of oil must not be used at temperatures above +32°F (0°C).

Oil pan capacity incl. oil filter	3.3 U.S. quarts (3,3 liters)
Oil pan capacity excl. oil filter	3.0 U.S. quarts (3 liters)
Oil pump relief valve opens at	47—55.5 lb./sq.in. (3,3—3,9 kp/cm²)
Oil pressure warning light operates at	4.3—8.5 p.s.i. (0.3—0.6 kp/cm²)
Draining plug, thread	M 14×1,5 (width across flats 0.75 in. = 19 mm)
Oil pump:	
Clearance rotor to housing	0.012 in. (0,3 mm)
Clearance rotor to sealing surface	0.004 in. (0,1 mm)

Wrench torques

BOLT JOINTS	kpm	ft.-lb.
Main bearing cap bolts	10	72
Connecting rod nuts	3,5	25
Crankshaft gear bolt	5,0	36
Flywheel retaining bolts, crankshaft	7,0	50
Camshaft thrust plate, block	2,0	15
Bolt – camshaft gear	5,0	36
Cylinder head to block (to be tightened in 3 stages)	5,5	40
	7,0	50
	9,5	68
Inlet manifold up to and incl. chassis No. 95/66.249, 96/524.379. To be tightened in 2 stages.		
Stage 1 Bolts	0,4–0,8	2,9–5,8
" 2 "	2,2–2,9	16–21
Stage 1 Nuts	0,3–0,5	2,2–3,6
" 2 "	1,5–1,8	11–13
From chassis No. 95/66.250, 96/524.380		
Stage 1 Bolts	0,4–0,8	2,9–5,8
" 2 "	2,1–2,5	15–18
Stage 1 Nuts	0,4–0,8	2,9–5,8
" 2 "	2,1–2,5	15–18
Intermediate plate to block	2,0	15
Transmission cover	2,0	15
Water pump to transmission cover	1,0	7
Pulley to balance shaft	5,0	36
Oil pump to block	1,5	11
Oil pan to block	0,5	4
Thermostat housing to induction manifold	2,0	15
Valve cover to cylinder head	0,5	4
Rocker shaft bracket	4,5	32
Oil filter half a turn after contact between gasket and engine block		

FUEL SYSTEM

Carburetor MODEL 1967—1968

			Engine equipped with SaFree Exhaust Emission Control Device.
Type	Solex 28-32 PDSIT-7	32 PDSIT-4	
Choke	Automatic	Automatic	Automatic
Main jet	125	127,5	127,5
Choke tube	25,5	25.5	25.5
Emulsion jet	110	95	100
Idling jet, fuel	50	50	42,5
Idling jet, air (drilling)	1.5	1.5	1.5
Float valve	1.5	1.5	1.5
Float weight	7.3 gram	7.3 gram	7.3 gram
Acceleration jet	50	50	50
Acceleration pump capacity	0.6±0.12 (cu. in.) 10±2 cm³/10 strokes		
Idling speed		800—900 rpm	800—900 rpm
Fast idling		Stage I	1100—1300 rpm
		Stage II	1700—1900 rpm
		Stage III	2700—2900 rpm
Float level when idling		Nom. 0.59±0.04 in. (15±1 mm) from gasket level	
Float level, fully closed float valve	—	—	—
Float level, fully open float valve	—	—	—

MODEL 1969

		Engine equipped with SaFree Exhaust Emission Control Device.
Type	FoMoCo C8GH-9510-G	C8GH—9510—H
Choke	Automatic	Automatic
Main jet	135	135
Float valve	2,0	2,0
Acceleration pump capacity	0,33—0,45 cu. in. (5,5—7,5 cm³)/ 10 strokes	
Idling speed	800—900 rpm	900 rpm
Fast idling, third step	1800—2000 rpm	1900—2100 rpm
Float level, fully closed float valve	1,08 in. (27,5 mm)	1,080±0,010 in. (27.5±0.25 mm)
Float level, fully open float valve	1,34 in. (34,0 mm)	1,420±0,010 in. (36±0.25 mm)

MODEL 1970

		Engine equipped with SaFree Exhaust Emission Control Device.
Type	FoMoCo C8GH-9510-G	70 TW—9510—AA
Choke	Automatic	Automatic
Main jet	135	135
Float valve	2,0	2.0
Acceleration pump capacity	0,33—0,45 cu. in. (5,5—7,5 cm³)/ 10 strokes	
Idling speed	800—900 rpm	900 rpm
Fast idling speed with headlights lower beam on third step	1800—2000 rpm	1900—2100 rpm
Float level, fully closed float valve	1,08 in. (27,5 mm)	1,080±0,010 in. (27.5±0.25 mm)
Float level, fully open float valve	1,34 in. (34,0 mm)	1,420±0,010 in. (36±0.25 mm)

MODEL 1971		Engine equipped with SaFree Exhaust Emission Control Device.
Type	FoMoCo71TW-9510-JB-JC	71TW-9510-LA
Choke	Automatic	Automatic
Main jet	125*	137
Float valve	2,0	2,0
Acceleration pump capacity	0.27—0.4 cu.in. (4.5—6.5 cm³)/10 strokes	
Idling speed	800—900 rpm	900 rpm
Fast idling speed with headlights lower beam on third step	1800—2000 rpm	1900—2100 rpm
Float level, fully closed float valve	1,08 in. 27,5 mm	1,080±0,010 in (27,5±0,25 mm)
Float level, fully open float valve	1,34 in. 34,0 mm	1,420±0,010 in. (36±0,25 mm)

* The main jet size of the green-blue marked carburetor 71TW-9510-JA will be 132.

Fuel pump

Type	Membrane pump driven by eccentric on the camshaft
Feeding pressure	3.4—4.3 lb./sq.in. (0,24—0,30 kp/cm²) at 4000 crankshaft rpm

Fuel tank

Up to and incl. model 1970	As from model 1971 (Expansion space)
Capacity:	
SAAB 96 and Monte Carlo approx. 10.5 U.S. gal. (approx. 40 liters)	SAAB 96 approx. 10 U.S. gal. (approx. 38 liters)
SAAB 95 approx. 11.5 U.S. gal. (approx. 43 liters)	SAAB 95 approx. 11 U.S. gal. (approx. 42 liters)

Fuel transmitter:

Type designation SAAB 95 up to chassis No. 57.023	Veglia 67-8011
Type designation SAAB 95 as from chassis No. 57.024	VDO 38/20
Type designation SAAB 96 up to chassis No. 475.599	VDO 20.228
Type designation SAAB 96 as from chassis No. 475.600	VDO 38/228

Exhaust system

Exhaust pipe, internal diameter	1.34 in. (34 mm)

Cooling system:

Type	overpressure
Capacity incl. heater:	
Model 1969	7.2 US quarts (6.8 liters)
Model 1969 USA	7.5 US quarts (7.1 liters)
Model 1967–68	7.9 US quarts (7.5 liters)
Thermostat opening range	181°F (83°C), previous type 189°F (87°C)
max. opening	0.28 in. (7 mm)
Radiator pressure cap opens at	2.2–4.3 lb./sq. in. (0.25–0.30 kp/cm^2)
Fan belt, designation	9.5 x 1025 La.

FREEZING POINTS FOR GLYCOL MIXTURES

Volume % glycol	Freezing Point °F	°C
10	25	−4
20	14	−10
30	1	−17
40	−15	−26
50	−38	−39

ELECTRICAL SYSTEM

AS FROM MODEL 1971 LHD-CARS

Battery

Voltage	12 V	12V
Capacity	44 Ah	60 Ah

Alternator, Bosch

Type	K 1 ⟷ 14V 35 A 20	0 120 400 615
Rated voltage		14 V
Rated rpm		2000
Max. permissible continuous load		35 A
Direction of rotation		Clockwise and counter-clockwise
Brush-spring pressure		10,5—14 oz. (300—400 g)
Ratio pulley, engine — alternator		1:1,85
Testing values, see chapter 3		

Charging regulator, Bosch

Type designation	BOSCH AD 1 14 V (not radio suppressed)

Starter motor, Bosch

	MODEL 1967–1968		AS FROM MODEL 1969	
Type designation	EF 12V 0,8 PS	0001208029	GF 12V 1,0 PS	0001311024
Number of teeth on pinion		9		9
Number of teeth on ring gear		138		138
Output		0,8 hp		1,0 hp
Testing values				
Mechanic values:				
Brush-spring pressure	40,5—46 oz. (1150—1300 p (g))		40,5—46 oz. (1150—1300 p (g))	
Pinion backlash	0,0138—0,0236 in. (0,35—0,6 mm)		0,0138—0,0236 in (0,35—0,6 mm)	
Distance between pinion and ring gear	0,0985—0,118 in. (2,5—3,0 mm)		0,0985—0,118 in. (2,5—3,0 mm)	
Contact reserve		0,0395 in. (1,0 mm)		0,0395 in. (1,0 mm)
Rotor axial clearance	0,00197—0,0118 in. (0,05—0,3 mm)		0,00197—0,0118 in. (0,05—0,3 mm)	
Rotor brake friction torque	0,181—0,290 ft-lbs (2,5—4,0 kpcm)		0,181—0,290 ft-lbs (2,5—4,0 kpcm)	
Pinion clearance torque	0,094—0,130 ft-lbs (1,3—1,8 kpcm)		0,094—0,130 ft-lbs. (1,3—1,8 kpcm)	
Electric values:				
Idle speed	11,5V och 30—50A	6500—7700 rpm	11,5V och 35—55A	6500—8500 rpm
Charged	9V och 170—200A	1150—1450 rpm	9V och 205—235A	1000—1300 rpm
Locked starter motor		6V 250—300 A		6V 325—375A
Lowest pull-in voltage for operating solenoid switch		7,5V		8V

Distributor, Bosch

			AS FROM MODEL 1969	USA CARS AS FROM MODEL 1971
Type designation		JFUR 4		
	Previous designation	0 231 146 044 or 0 231 146 024		
	Later designation	0 231 146 033 or 0 231 146 073	0 231 146 084	0 231 167 039
Capacitor:		1 237 330 091		1 237 330 196
Capacity		0,2 µF±10 %	0,2 µF±10 %	0,2 µF±10 %
Ignition setting:				
Basic setting with test lamp		6°, B.T.D.C		3° B.T.D.C. at max 800 rpm and both vacuum hoses disconnected
Basic setting with stroboscope at max 800 rpm with disconnected vacuum hose		6°, B.T.D.C		
Remark!				
1° on the balance shaft pulley corresponds to approx. 0.05 in. (1,2 mm) on the circumference of the pulley.				
Order or firing, cyl. 1 is the furthermost R.-H. one		1—3—4—2		
Breaker gap		0.016 in. (0,4 mm)		
Dwell angle		50±2°		
Contact pressure		14—19 oz. (400—530 g)		
Direction of rotation		clockwise		
Resistance in distributor arm		3000 ohm±20 %		

NOTE! Re ignition advance curves, see chapter 3.

Vacuum chamber

		AS FROM MODEL 1969	USA CARS AS FROM MODEL 1971
Previous designation	1 237 121 215	1 237 121 335	1 237 121 849
Later —"—	1 237 121 261		

Ignition coil, Bosch:

Type designation	K 12
Performances at a primary voltage of 12 V:	
4.000 sparks/minute (1.000 distributor revolutions) Spark length minimum	0.55 in. (14 mm)
16.000 sparks/minute (4.000 distributor revolutions) Spark length minimum	0.24 in. (6 mm)
Primary-winding resistance (between connections 1 and 15)	3.1—3.6 ohm

Spark plugs

	Up to chassis No. 95/55.766,96/487.638. (black or silverpainted engine) For USA up to chassis No. 95/54.854, 96/482.197	As from chassis No. 95/55.767, 96/487.639. (blue engine) For USA as from chassis No. 95/54.855, 96/482.198	USA CARS AS FROM MODEL 1971
Auto-Lite	AE-22	AG-22	AG-32
Auto-Lite interference suppressed	AER-22		
Bosch	W 225 T35	W 200 T30	W145T30
Champion	L 82 Y	N-9Y	N-11Y
NGK	B-7 H	BP 7E	BP-6E
Electrode gap	0.024—0.028 in. (0,6—0,7 mm)		
Tightening torque	22—29 ft.-lb. (3,0—4,0 kpm)		

Ignition cables

Resistance in spark plug connection	1000 ohm±10 %

Bulbs

UP TO MODEL 1968	QTY. SAAB 95	SAAB 96	MONTE CARLO	CAP	EFFECT
Headlights, Sealed Beam	2	2	2	–	50/40 W
Headlights, asymmetric	2	2	2	P 45 T	45/40 W
Parking light and direction indicator light, front	2	2	2	BAY 15 D	21/5 W
Stop light and direction indicator light, rear	4	4	4	BA 15 S	21 W
Tail light	2	2	2	BA 15 S	5 W
Number plate light	2	2	2	S 8,5	5 W
Back-up light	–	–	2	BAY 15 D	21/5 W
Dome light	2	1	1	S 8,5	5 W
Fog- and spot light	–	–	2	BA 20 S	45 W
Temp.- and fuel gauge, speedometer	–	–	4	BA 7 S	2 W
Lighting, clock	–	–	1	BA 9 S	4 W
Lighting, tachometer	–	–	1	BA 9 S	2 W
Control lamps	9	11	6	BA 7 S	2 W
Other instr. lamps	2	–	–	BA 9 S	2 W
Trunk light	–	1	1	BA 9 S	4 W
Fuses	12	12	12		8 A

MODEL 1969–1970

Headlights, Sealed Beam	2	2	—	50/40 W
Headlights asymmetric	2	2	P 45 T	45/40 W
Parking light, front	2	2	BA 15 S	5 W
Direction indicator light, front	2	2	BA 15 S	21 W
Parking and direction indicator lights, front (USA)	2	2	US No. 1073 BAY 15 D	5/21 W
Direction indicator light, rear	2	2	BA 15 S	21 W
Tail light	2	2	BA 15 S	5 W
Stop light	2	2	BA 15 S	21 W
Number plate light	3	2	S 8,5	5 W
Control- and instrument lamps	10	10	Glass	1,2 W
Control lamp, hazard warning signal	1	1	BA 75	2 W
Dome light	2	1	S 8,5	5 W
Trunk light	—	1	BA 9 S	4 W
Back-up light	2	—	BA 15 S	21 W
Side position light (USA)	2	—	BA 9 S Miniature bulb	4 W
Lighting tachometer (USA)	—	2	BA 9 S Miniature bulb	2 W

AS FROM MODEL 1971

Headlights, Sealed Beam	2	2	—	50/40 W
Headlights asymmetric	2	2	P 45 T	45/40 W
Parking light, front	2	2	BA 15 S	5 W
Direction indicator light, front	2	2	BA 15 S	21 W
Parking and direction indicator lights, front (USA)	2	2	US No. 1073 BAY 15 D	5/21 W
Direction indicator light, rear	2	2	BA 15 S	21 W
Tail light	2	2	BA 15 S	5 W
Stop light	2	2	BA 15 S	21 W
Number plate light	3	2	S 8,5	5 W
Control- and instrument lamps	10	10	Glass	1,2 W
Control lamp, hazard warning signal	1	1	BA 75	2 W
Dome light	2	1	S 8,5	5 W
Trunk light	—	1	BA 9 S	4 W
Back-up light	2	—	BA 15 S	21 W
Side position light (USA)	2	—	BA 9 S Miniature bulb	4 W
Lighting tachometer (USA)	—	2	BA 9 S Miniature bulb	2 W
Fuse, headlight wipers	1	1		2,5A

Flasher unit

Type designation:

	UP TO MODEL 1968	AS FROM MODEL 1969
Lucas	FL5 12V 42 W	Tungsol 550-12
Hella	91 PSt 2×32 Cp 12 V	Hella 91P3V2-4×21W-12

Horn, Hella

Type designation B 32/5—12 V

Heater fan motor

Type designation, Electrolux KS 3430/220 12 V

Windshield wiper motor

Type designation, Lucas up to and incl. model 1969 DL 3 A

Type designation, Lucas as from model 1970 15 W

Windshield washer

Monte Carlo model 1967	Make Dahlberg
Windshield washer from model 1968 (all models)	Make MEAB

Headlight wiper motor

Type designation	4E3876
Output	approx. 25 W
Tightening torque, wiper arm screw	7,23 ft.-lbs. (100 kpcm) (locked with Loctite)

Transmission

Oil capacity	approx. 1.4 U.S. quarts (approx. 1,4 liters)
Type of oil	EP-oil SAE 80
Gear ratios, total:	
1st gear	17,0:1
2nd gear	10,2:1
3rd gear	6,3:1
4th gear	4.1:1
Reverse	15,5:1
Differential gear ratio, pinion: ring gear	4,88:1
Number of teeth, pinion: ring gear	8:39

Road speed in m.p.h. at 1000 rpm engine speed:

	SAAB 95		SAAB 96		MONTE CARLO	
Tire dimension	5,60 x 15"		5,20 x 15"		155 x 15"	
1st gear	4.2 m.p.h.	6.8 km/h	4.2 m.p.h.	6.7 km/h	4.2 m.p.h.	6.7 km/h
2nd gear	7.1 m.p.h.	11.4 km/h	7.0 m.p.h.	11.2 km/h	6.9 m.p.h.	11.1 km/h
3rd gear	11.5 m.p.h.	18.5 km/h	11.3 m.p.h.	18.2 km/h	11.2 m.p.h.	18.0 km/h
4th gear	17.7 m.p.h.	28.4 km/h	17.2 m.p.h.	27.8 km/h	17.1 m.p.h.	27.6 km/h
Reverse	4.7 m.p.h.	7.5 km/h	4.7 m.p.h.	7.4 km/h	4.5 m.p.h.	7.3 km/h

Pinion/ring-gear adjustment: specified dimension ±0.002 in. (0,05 mm)
Ring-gear backlash: specified dimension ±0.002 in. (0,05 mm)

MATCHED GEAR SETS

3rd speed gear
Pinion shaft 3rd gear
4th speed gear
Pinion shaft 4th gear
Ring gear
Pinion shaft
Synchromesh

Tightening torques, gear box

Bolt joints	Bolts		Tightening torques	
	Quant.	Size	kpm	ft.-lb.
Transmission case end cover	6	5/16"	2,5	18
Differential bearings	4	3/8"	4	29
Ring gear bolts	12	5/16"	2,5	18
Pinion-shaft nut. First tightening	1	7/8"	12	87
Then slacken and retighten			6	44
Nut, primary shaft	1	3/4"	5	36
Nut, countershaft	1	9/16"	8	60

Clutch

Fichtel & Sachs Clutch

Clutch type	single dry plate
Clerance, release bearing — clutch measured at the slave cylinder	0.16 in. (4 mm)
Clearance between release plate and flywheel	approx. 1 in. (26 mm)
Pressure-plate springs:	
Length compressed	0.96 (24.5 mm)
Tension when compressed	134—147 lb. (61—67 kp)
Dimensions of clutch facing	5—6.5 in. (127×190,5 mm)
New clutch disc:	
Thickness, unloaded	0.33±0.04 in. (8.4±0.1 mm)
Thickness, loaded with 825 lbs. (375 kg)	0.28±0.01 in. (7.2±0.3 mm)
Max throw clutch disc	0.024 in. (0.6 mm)
Engagement pressure	750—935 lb. (340—425 kp)

Clutch operation, hydraulic

UP TO MODEL 1968	Master cylinder	Slave cylinder
Make and type	Girling 5/8"	Girling 3/4"
Cylinder diameter	5/8"	3/4"
Max. permissible stroke	1.38 in. (35 mm)	
Hose connection	3/8" UNF-24	3/8" UNF-24
Hose length between master and slave cylinder		14 in. (355,6 mm)
Distance from clutch-pedal foot plate to the lower part of the dash panel (max. pedal stroke)		approx. 6.3 in. (ca 160 mm)
Clearance, release bearing — clutch measured at the slave cylinder		0.16 in. (4 mm)

AS FROM MODEL 1969

Make and type	Lockheed 5/8"	Girling 3/4"
Cylinder diameter	5/8"	3/4"
Stroke	1.22 in. (31 mm)	
Hose connection	7/16"–20 UNF-2B	7/16"–20 UNF-2B
Hose length between master and slave cylinder	15.3 in. (388,6 mm)	
Distance from clutch—pedal foot plate to the lower part of the dash panel (max. pedal stroke)	5.1 in. (130 mm)	
Clearance, release bearing—clutch measured at the slave cylinder	0.16 in. (4 mm)	

BRAKE SYSTEM

General

Make	Lockheed
Type, front	Disc brake
Type, rear	One leading shoe
Footbrake up to and incl. model 1968	Hydraulic, diagonal twocircuit type
Footbrake, from model 1969	Hydraulic, diagonal twocircuit type with vacuum servo[1)]
Handbrake	Mechanical

[1)] On R.H.D. cars there are no vacuum servo.

As from model 1971, LHD-cars:	
Master cylinder	ATE

Dimensions, etc.:

Brake disc, front	10½" (266,70 mm)
Brake drum, rear	8" (203,2 mm)
Master cylinder model 1967, 1968	¾"
Master cylinder as from model 1969	13/16"
Wheel cylinder, front	2"
Wheel cylinder, rear	SAAB 96, Monte Carlo: 5/8" SAAB 95 up to and incl. model 1969: 3/4" SAAB 95 as from model 1970: 5/8"
Brake shoes, rear	8"×1½"
Brake hoses, front, length of	8½"
Brake hoses, rear, length of	SAAB 96 and Monte Carlo 8½" SAAB 95 6½"
Other brake lines	3/16" Bundy tube
Clearance between master-cylinder piston and push-rod	0.024—0.047 in. (0.6—1.2 mm)
Same clearance at tip of brake pedal	0.12—0.24 in. (3—6 mm)
Distance from brake-pedal footplate to the lower part of the dash panel max. stroke approx.	6.3 in. (160 mm)
Brake fluid	Satisfying the requirements of spec. SAE J 1703a or SAE 70R3
Grinding of brake disc permitted to min. thickness:	0,355 in. (9 mm)
Adjustment machining of brake drums permitted to max. diameter:	
Rear	8.06 in. (204.7 mm)
Max. total indicated radial brake-drum throw	0.006 in. (0.15 mm)
Max. total indicated axial brake disc throw	0.08 in. (0.2 mm)
Centerless grinding of brake linings	Thickness of rear brake lining: 0.020—0.022 in. (0.50—0.56 mm) less than that of the drum
Tightening torques:	
Castle nut, front wheel hub	18 kpm, 130 ft.—lb.
Castle nut, rear wheel hub	9 kpm, 65 ft.-lb.

Vacuum servo

	MODEL 1969—1970	AS FROM MODEL 1971, LHD-CARS
Make	Lockheed	ATE
Type	4258—193	T51/734

FRONT ASSEMBLY, STEERING

Wheel alignment

Front wheel alignment, no load:	
"King-pin" inclination	7± 1°
Caster	2±½°
Camber	¾±¼°
Toe-in at wheel rim	0.08 ± 0.04 in. (2 ± 1 mm)
Turning angles:	
Outside wheels	20°
Inside wheels	22½ ± 1½°

Steering gear

	UP TO AND INCL. MODEL 1968	FROM MODEL 1969
Steering-gear adjustment:		
Pinion axial clearance	0.004–0.008 in. (0.1–0.2 mm)	max. 0.005 in. (0.12 mm)
Radial clearance of rack	max. 0.012 in. (0.3 mm)	max. 0.01 in. (0.25 mm)
Steering ratio, steering wheel/road wheels average	14:1	15.5:1
Wheel travel between limit positions	2 1/4 turns	2.7 turns
Tie-rod ends		
Distance between wrench flat (end of thread) and lock nut	max. 1.5 in. (40 mm) [1]	max. 1,0 in. (25 mm)
Permissible difference between lefthand and righthand dimension	max. 0.08 in. (2 mm)	max. 0.08 in. (2 mm)

[1] The following is valid for certain cars of model 1968. The distance between end of thread and lock nut must not exceed 1,0 in. (25 mm)

Tightening torque

Nut, tie-rod end:	3.5—5 kpm, 25—36 ft.—lb.

Rear wheel alignment

Camber	0 ± 1°
Toe-in (toe-out):	0 ± 1°
Both wheels together or Measured rim-to-rim	0 ± 0.28 in. (7 mm)
Toe-in (toe-out) per wheel must not exceed	0 ± ¾°
Max. difference in wheelbase, left and right (front wheels pointing straight ahead)	0.6 in. (15 mm)

Front shock absorbers

		FROM MODEL 1968
Type of shock absorber	Telescopic, hydraulic	
Length of front shock absorber	9¾ in. (250 mm) Extended 15⅜ in. (390 mm)	
Front shock-absorber stroke, fitted	3¼ in. (82 mm)	3 1/3 in. (85 mm)

Rear shock absorbers

	SAAB 95	SAAB 96 AND MONTE CARLO
Type of shock absorber	Arm, hydraulic	Telescopic, hydraulic
Length or rear shock absorber between centre hole and shoulder for washer		10" (255 mm)
Extended		16 7/16" (417 mm)
Stroke, shock absorbers	4¼ in. (106 mm)	4¼ in. (106 mm)

Wheels

Type	"wide base" disc wheels (from model 1969 with safety rim)
Size	4J × 15"
Depth of drop center	1.77 in. (45 mm)
Permissible out-of-round of rim, see fig. A	0.06 in. (1.5 mm)
Permissible rim throw, see fig. B	0.06 in. (1.5 m)

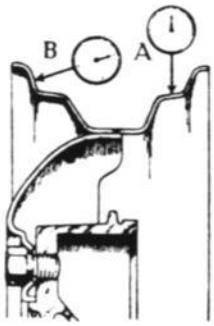

MEASURE POINTS ON THE RIM

Tires Saab 95 and 96

Size, Saab 96	5.20 x 15" or 5.60 x 15" or 155SR 15"
Size, Saab 95	5.60 x 15" or 155SR 15"

Tire pressure Saab 96 (5,20×15"):	Front	Rear
Light load	24psi (1,7 kp/cm²)	24psi (1,7 kp/cm²)
Full load	27psi (1,9 kp/cm²)	27psi (1,9 kp/cm²)

Tire pressure Saab 95 (5,20×15"):	Front	Rear
Light load	24psi (1,7 kp/cm²)	24psi (1,7 kp/cm²)
Full load	27psi (1,9 kp/cm²)	30psi (2,1 kp/cm²)

Tires Monte Carlo

Size, Monte Carlo, with tube		155×15"
Tire pressure	Front	Rear
Light load	21 p.s.i. (1.5 kp/cm²)	20 p.s.i. (1.4 kp/cm²)
Full load	24 p.s.i. (1.7 kp/cm²)	24 p.s.i. (1.7 kp/cm²)

For fast driving the tire pressure should be 24 lbs/sq. in. (1,7 kp/cm² both front and rear, irrespectively of load.

SUSPENSION, WHEELS

Front coil spring:	MODEL 1967	MODEL 1968–1970	MODEL 1971	MODEL 1971 – EXPORT MARKETS
Max. spring expansion	5,5 in. (140 mm)	5,7 in. (145 mm)	5,7 in. (145 mm)	5,7 in. (145 mm)
Number of spring coils	9,5	10,5	10,5	9,75
Length of coil spring	15,4 in. (391 mm)	16,0 in. (405 mm)	16,4 in. (416 mm)	14,5 in. (368 mm)
Wire diameter	0,46 in. (11,7 mm)	0,47 in. (12 mm)	0,47 in. (12 mm)	0,51 in. (13 mm)
Colour marking	yellow	green	blue	white

Rear coil spring:	MODEL 1967	
	SAAB 95	SAAB 96 AND MONTE CARLO
Max. spring expansion	6,75 in. (170 mm)	6,75 in. (170 mm)
Number of spring coils	9	9
Length of coil spring	13,5 in. (342 mm)	13,5 in. (342 mm)
Wire diameter	0,45 in. (11,4 mm)	0,43 in. (11,0 mm)
Colour marking	white	yellow

Wheel bolts

Width across flats	3/4 in. (19.05 mm)	3/4" in. (19.05 mm)
Thread SAAB 95 and 96	UNC 9/16"	UNC 9/16"
Thread Monte Carlo	UNC 5/8"	UNC 9/16"

Tightening torques

Castle nut, front wheel hub	18 kpm	130 ft.-lbs.
Castle nut, rear wheel hub	9 kpm	65 ft.-lbs.
Wheel bolts	8—10 kpm	58—72 ft.-lbs.

BODY

Specifications

Body dimensions (approximate)	SAAB 95	SAAB 96 AND MONTE CARLO
Overall length	13 ft. 7 in. (4160 mm)	12 ft. 10 in. (3930 mm)
Overall width	5 ft. 2 in. (1585 mm)	5 ft. 2 in. (1585 mm)
Overall height	4 ft. 1½ in. (1256 mm)	4 ft. 1 in. (1240 mm)
Weight of body, total	646 lb (293 kg)	555 lb (252 kg)
excl. hood, doors, fenders and luggage-compartment cover	496 lb (225 kg)	415 lb (188 kg)

Enamel:

Colour code	Colour	Manufacture
BK1B	Black	Beckers
BK1L	Black	Beckers
B6L	Middle blue	Beckers
B7H	Middle blue	Herberts
B7L	Middle blue	Beckers
Gn5L	Olive green	Beckers
Gn6L	Sea-green	Beckers
Gn7H	Tyroler green	Herberts
Gy4L	Ore-grey	Beckers
R2B	Red	Beckers
R2L	Red	Beckers
RB1B	Silvermink	Beckers
W1L	White	Beckers
W1B	White	Beckers
Y5L	Light beige	Beckers
Y6H	Savann beige	Herberts

INSTRUMENTS

Speedometer drive ratio

Model	Ratio ring gear: pinion	Dynamic radius of road wheel in.	mm	Speedometer Rev. per kilometer covered	Rev. per mile covered
95	8:39	12.2	310	565	910
96	8:39	11.8	305	575	926
Monte Carlo	8:39	11.8	300	585	942

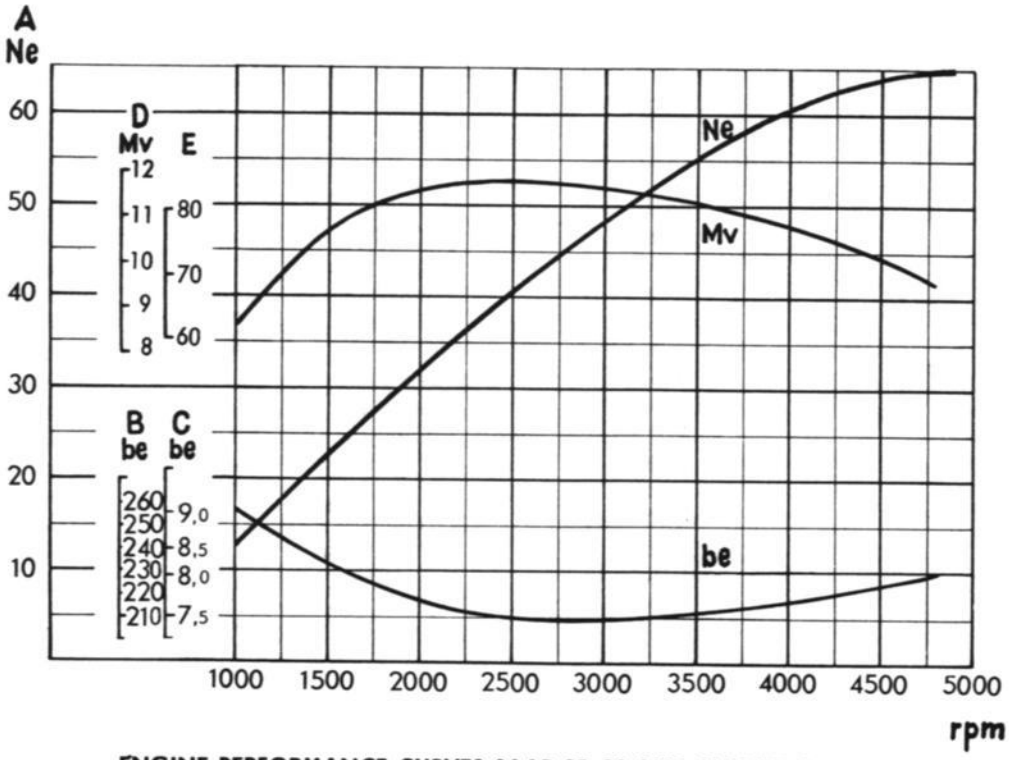

ENGINE PERFORMANCE CURVES SAAB 95, 96 AND MONTE CARLO S 2161

Ne = output (DIN)
Mv = Torque
be = fuel consumption
A = net output b.h.p.
B = g/hph
C = oz/hph
D = Torque kpm
E = Torque ft.-lbs.

TROUBLE SHOOTING

General

The localization of faults in a car is often the most difficult part of the service work, and no written instruction on the subject can replace familiarity with the car and knowledge of its construction. The information contained in this section has been prepared with the object of facilitating systematic diagnosis, but does not claim to be exhaustive. Under each heading, the most likely sources of trouble are listed in order of probability, together with the appropriate corrective measures. Since a number of different auxiliary apparatuses may be used to facilitate trouble shooting, the instructions given for each individual problem should be followed.

Engine

Source of trouble	Remedy
STARTING DIFFICULT, COLD ENGINE	
Faulty spark plugs. Gaps too wide.	Clean, adjust and test or replace.
Faulty distributor.	Check, adjust.
Poorly charged battery.	Check condition of battery. Recharge if the specific gravity of the electrolyte has dropped to 1.23.
Faulty capacitor.	Test.
Weak ignition coil.	Test.
Faulty interference suppressors on spark plugs.	Replace.
No fuel in the carburetor.	Check that the pump is feeding fuel by pulling off hose at carburetor and running with starter motor. If no fuel is supplied, check pump filter, pipes, hoses and fuel filter for leaks and clogging. If fuel supply still fails after a new test, running with starter motor for about 12–15 sec., the pump itself is probably defective. Remove the pump for examination, and repair if necessary.
Clogged jets and passages.	Blow jets and passages clean with air.
No primary current to coil and distributor. No secondary current.	Check cable connestions, and especially the starter switch, to confirm that current is supplied to ignition system when starter motor is on. The cable may be ruptured at the ignition switch.

Source of trouble	Remedy
Choke strangler flap fails to close.	Remove air cleaner. Check that choke spindle runs easily. If spindle binds, clean its bearing surfaces with gasoline or trichloroehylene.
Faulty carburetor gaskets.	Replace.
Incorrect fast-idle adjustment.	Check adjustment. See section headed "Fast-idle adjustment" in Chapter 2.
Oil to viscous or dirty	Change oil.
Poor compression caused by worn cylinders, pistons or piston rings. Piston rings stuck in ring grooves. Leaking valves.	Measure compression in all cylinders.
Leaking cylinder head gasket.	Replace gasket.
STARTING DIFFICULT, WARM ENGINE	
Incorrect float level. Damaged float or leaking needle valve.	Check, adjust if necessary. Replace any faulty parts.
No primary current to coil and distributor. No secondary current.	Check, correct as instructed above.
Dirt in jets or passages.	Blow jets and passages clean with air.
Flooded carburetor.	Check needle valve and float. Clean or replace.
ENGINE DOES NOT IDLE	
Incorrect float level. Leaking needle valve.	Check, adjust if necessary.
Idling fuel jet clogged with dirt.	Clean.
Improperly adjusted idling screw and/or air-regulating screw.	Check, adjust.
Faulty gasket between induction manifold and carburetor.	Replace gasket.
Leakage at vacuum connection.	Check, repair.

Source of trouble	Remedy
PINGING	
Ignition timed too early.	Adjust ignition timing. See Chapter 3, Electrical System.
Wrong jets in carburetor. (Mixture too lean.)	Fit jets of right size. See Chapter 0.
Automatic ignition advance in distributor sticks at earliest timing.	Test distributor on test rig, if available. Clean and lubricate all parts. Replace any worn parts.
Heavy deposits of carbon in compression chambers due to excessive city driving.	Decarbonize cylinder head.
Octane number of fuel is too low.	Change fuel next time tank is refilled.
IGNITION BY INCANDESCENCE	
Wrong spark plugs.	Make certain that correct type of plug is fitted. See Chapter 3, Electrical System.
Heavy deposits of carbon in compression chambers.	Decarbonize cylinder head.
Engine idles too fast.	Adjust idling speed.
EXCESSIVE FUEL CONSUMPTION	
It should be borne in mind that apparently excessive fuel consumption may result from extraneous causes such as a car top carrier, snow tires, predominately city driving, etc. A small tank installed in the engine compartment may be used to check fuel consumption. Connect up the small tank ahead of the fuel tank so that the same pump pressure is obtained. A test based merely on consumption between two fill-ups cannot be regarded as reliable.	
Damaged fuel tank.	Check, repair if necessary.
Damaged fuel line.	Check, replace if necessary.
Leaking nipples or fittings.	Tighten or replace.
Ignition improperly adjusted.	Check, adjust.
Faulty distributor.	Test, adjust.
Faulty ignition coil.	Test, replace if necessary.
Faulty capacitor.	Test, replace if necessary.
Carburetor improperly adjusted. Float level too high, wrong type of jets fitted, or air-regulating screw improperly adjusted.	Check carburetor settings and adjust if necessary. See Chapter 2.
Automatic choke improperly adjusted.	Check, adjust.
Clogged air cleaner.	Blow air cleaner clean with air. Replace if necessary.
Dragging brakes.	Check brake adjustment and free rolling of wheels. NOTE! Make sure that handbrake wire returns properly.

TROUBLE SHOOTING

Source of trouble	Remedy
LACK OF POWER	
Engine not firing on all cylinders.	Check spark plugs and connections at plug terminals and distributor cover. Check radio interference suppressors if fitted. Set air preheater device to winter position.
Carburetor adjusted improperly.	Check carburetor jet sizes, float level and richness adjustment.
Icing in carburetor.	Set air preheater device to winter position.
Unsatisfactory fuel.	Empty and clean tank.
Leaking valves in fuel pump.	Replace.
Fuel-pump filter clogged with dirt.	Remove and clean.
Air cleaner clogged.	Remove and clean.
Dirt in jets.	Clean.
Poor compression caused by worn cylinders, pistons or piston rings.	Measure compression in all cylinders.
Leaking valves.	Decarbonize and grind valves.
OVERHEATING	
Insufficient coolant.	Replenish coolant as required.
Fan belt slipping.	Adjust belt tension.
Damaged pump impeller.	Replace.
Faulty thermostat.	Test, replace if necessary.
Clogged radiator.	Clean.
Hoses and passages clogged by dirt and sludge.	Clean.
Clogged water distribution pipe.	Remove, clean.
Ignition improperly adjusted.	Check, adjust if necessary.
Air/fuel mixture too lean.	Clean, adjust carburetor.
ENGINE MISSES	
Unsatisfactory fuel. Water in fuel.	Empty tank, then remove and clean.
Partially clogged fuel line.	Check, flush clean.
Faulty fuel pump.	Check, repair if necessary.

Source of trouble	Remedy
Poor contact at ignition coil connection.	Check, test and repair.
Open contacts at primary circuit connections.	Check, correct.
Primary circuit open or shorted.	Check, correct.
Faulty ignition cables.	Clean connections. Replace cables if insulation is damaged.
Burnt breaker contact points.	Replace.
Incorrectly gapped breaker contact points.	Check, adjust.

EXCESSIVE OIL CONSUMPTION

Remember that it is advisable to ascertain the conditions under which the car is driven before examining the engine or taking corrective measures when oil consumption is high. If possible, ask the driver about his driving habits and the type of driving for which the car is used. It's a good idea to let the driver take the car out for a spin and watch how he operates it. Abrupt acceleration, racing the engine and high speed driving lead to excessive oil consumption. Excessive oil consumption may be caused by keeping the oil level too high. It is not necessary to add oil until the level has dropped to (or just above) the lower mark on the dipstick. However, the level must never be permitted to drop beneath the lower mark.

Leakage at oil pan gasket.	Tighten the bolts. Replace gasket if faulty.
Faulty gasket between fuel pump and cylinder block.	Replace gasket if faulty.
Damaged gasket in transmission cover.	Replace gasket.
Damaged crankshaft seal.	Replace seal.
Leakage at valve cover.	Check that cover is correctly fitted. Replace gasket if necessary.
Faulty seal at oil filter.	Check. Replace oil filter cartridge if necessary.
Worn cylinders, pistons or piston rings.	Measure compression.
Piston rings stuck in grooves or broken.	Replace piston rings.
Damaged valve stem seals.	Replace seals.
Worn valve guides.	Reaming of valve guides. Installation of oversize valves.

Source of trouble	Remedy
LOW OIL PRESSURE	
Faulty oil pressure gauge.	Test, replace if necessary.
Damaged wiring to oil pressure gauge.	Replace wiring.
Relief valve stuck in open position.	Remove, replace.
Relief valve spring broken or too weak.	Replace.
Worn relief valve plunger.	Replace.
Oil pump strainer clogged with dirt.	Clean.
Worn rotor in pump.	Replace.
Damaged or worn main and/or connecting rod bearings.	Replace. Regrind crankshaft if damaged or worn.
Faulty overflow valve in oil filter.	Replace oil filter cartridge.
ENGINE JERKS AND SPITS ON ACCELERATION	
Faulty spark plugs.	Test, replace if necessary.
Flash-over in ignition cables. Moisture in distributor cover.	Check and wipe ignition cables and distributor cover. Replace if necessary.
Faulty ignition coil.	Test, replace if necessary.
Acceleration pump inlet valve leaks.	Blow clean with air.
Acceleration pump outlet valve leaks.	Blow clean with air.
Acceleration jet clogged with dirt.	Clean jet.
Water in fuel.	Look for water in fuel-pump filter (at lowest point) and in float chamber.
Irregular fuel supply.	Check jets, float level, fuel-pump pressure, etc. See Chapter 2. Check that no air leakage occurs at gasket between induction manifold and cylinder block or at carburetor.

Source of trouble	Remedy
FUEL PUMP OPERATES IMPROPERLY OR NOT AT ALL	
Leakage at connections and pump housing cover.	Check fuel-hose connection nipples and cover gaskets.
Impurities in fuel.	Check that pump filter and fuel lines between tank and carburetor are not clogged.
Condensed water in fuel causes fuel system to freeze up in winter.	Check for icing in fuel-pump filter and fuel lines. Drain tank and refill with fresh fuel if necessary.
Leaking pump diaphragm and valves.	Check pump diaphragm and valves, and replace if necessary. Check pump pressure with manometer. See Chapter 2.
CARBURETOR FLOODS OR LEAKS FUEL	
Dirt in needle valve.	Clean valve and seat.
Worn valve or seat.	Replace.
Incorrect float level.	Check float level.
Excessive fuel-pump pressure.	Check pressure.
Leakage at fuel-pipe connections	Replace faulty connections.
Damaged float.	Replace.
UNEVEN IDLING	
Volume-control screw adjusted improperly.	Adjust.
Dirt in idling jet.	Remove, clean.
Idling passage clogged.	Remove carburetor and clean passage.
Air leakage at carburetor or induction manifold gaskets.	Tighten screws or replace gaskets. Adjust.
FAULTY FUEL GAUGE	
Fuel gauge registers too low or too high.	Remove tank sender unit and adjust by carefully bending float arm.
Fuel gauge works intermittently or not at all.	Fit a new gauge or tank sender unit in order to localize the fault. Faulty part can either be replaced or sent to local SAAB agent for repair.

Source of trouble	Remedy
Cooling system	
OVERHEATING	
See under "OVERHEATING" in section "ENGINE" of TROUBLE SHOOTING.	
LOW COOLANT TEMPERATURE	
Difficulty in maintaining sufficiently high coolant temperature in winter.	Check thermostat opening temperature. (One method is to install a new thermostat for comparison). It is recommended that air flow be screened at the front panel.
Electrical system	
BATTERY RUNDOWN	
Fan belt slipping.	Adjust belt tension. See Chapter 3, Electrical System.
Battery cells dry.	Check fluid level in battery.
Faulty battery.	Check that specific gravity is same in all cells after charging.
Alternator or relay giving insufficient current.	Carry out charging test. Check cable connections.
Short circuit in starter switch.	Disassemble and inspect switch.
Brakes	
BRAKE WARNING LIGHT GLOWS	
A. The light glows because of too great pedal travel, but the braking effect is good.	Adjust the rear wheel brake shoes.
B. The light glows because of too great pedal travel. The braking effect is poor or uneven.	Investigate and repair leakage on brake lines, hoses or cylinders.

CONTENTS

GENERAL HINTS

General

All shop personnel will be aware of the importance of tidiness and good order in the shop; similarly, every experienced mechanic realizes that certain parts of a car must be treated with care and protected from dirt and foreign matter while being serviced. For the new man, who may not be so familiar with the kind of work involved, the following hints may be of help:

1. Protect fenders and other painted areas with suitable covers while working with the car. It is easy to get grease stains or scratches on the paintwork, but it is far more difficult to remove them.
2. Protect the upholstery from oil, etc., by using protective covers.
3. Clean the car thoroughly under fenders and around the rear axle before starting work on hubs and axles. Apart from making work easier, this prevents dirt and grit from getting into bearings and other susceptible parts.
4. Before removing a spark plug, carefully clean the recess around its head.
5. One of the basic prerequisites of good service is the choice of a suitable place for each job. It would be most unsuitable, for instance, to dismantle an engine or a gearbox on or near a bench used for filing or similar abrasive operations.

Instructions for jacking-up the car

The construction of the car, with its self-supporting body, offers no natural lifting points at which to apply a jack, as on cars with a conventional chassis. Two special fittings are provided one on each side, to take the jack included in the tools for the car. They are intended for use when changing wheels, etc. As from chassi No. 428.784 for the SAAB 96, and from chassis No. 45.505 for the SAAB 95, there is instead one support at each end of the sill. The sills, to which the jack supports are welded, form a beam on either side and are strong enough to take an ordinary shop jack for lifting one side of the car. Under the front of the engine compartment floor, immediately behind the front muffler, a welded fitting provides a support for a shop jack. This is the best point at which to lift the front of the car in order to lubricate the ball joints. A similar jacking point is provided under the rear part of the car, where the floor is reinforced. This point is located on the center line of the car, immediately in front of the rear-axle tunnel. Most shop jacks feature a lifting head shaped like a low fork, and it is therefore advisable to place a wooden block of suitable size on this in order to avoid damaging the floor.

For certain jobs it is necessary to support the front or rear part of the car on trestles. Most of the stands usually available will be found suitable for the Saab. Make sure that the weight of the car is borne up on the strongest part of the sills, i.e. in the immediate vicinity of the wheel houses.

Thread system and wrench sizes

The thread system used in the Saab car is the UNC, i.e. UNIFIED COARSE THREADS, in which inches are the unit of measurement.

Wrench sizes for nuts and bolts are expressed in inches and the dimensions are the same as the designations of the tools. In a few cases, UNF, i.e. UNIFIED FINE, threads are used.

Exceptions to the thread system will be encountered in the case of components supplied by sub-suppliers, such as Bosch, S.U. and Solex, etc.

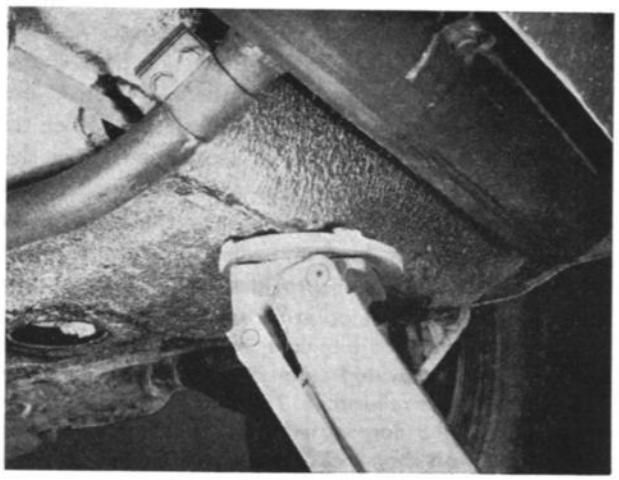

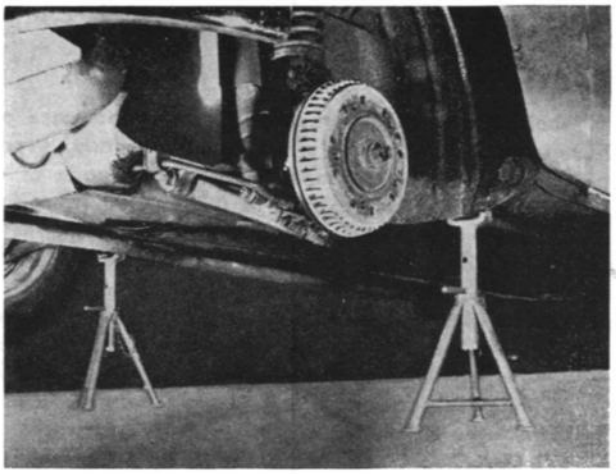

JACKING-UP AND SUPPORTING THE FRONT END

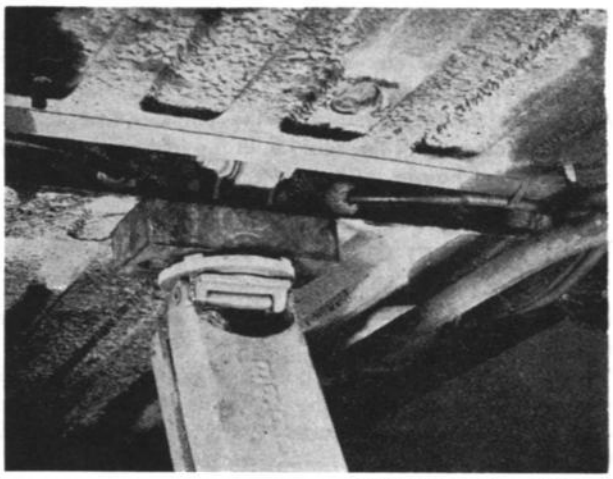

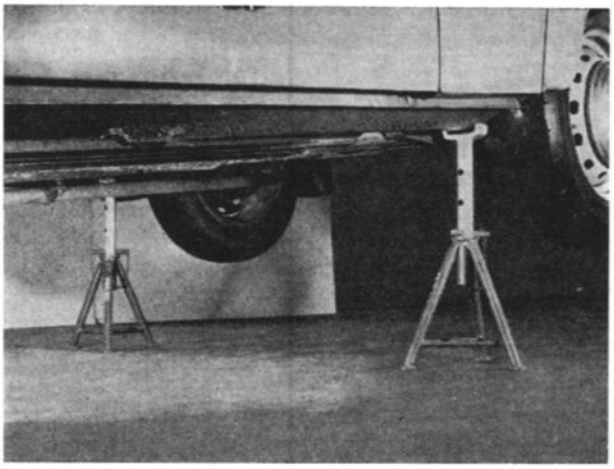

JACKING UP AND SUPPORTING THE REAR END

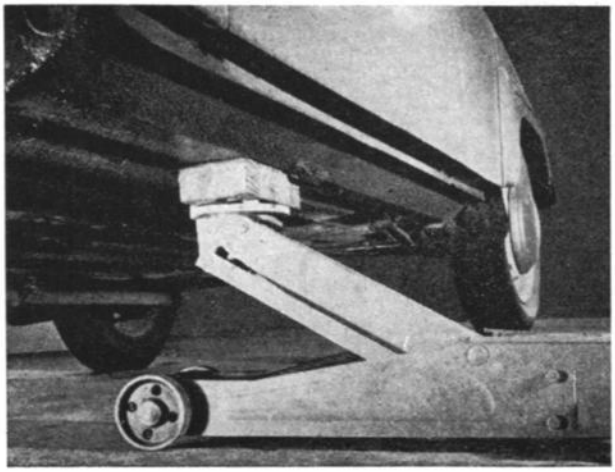

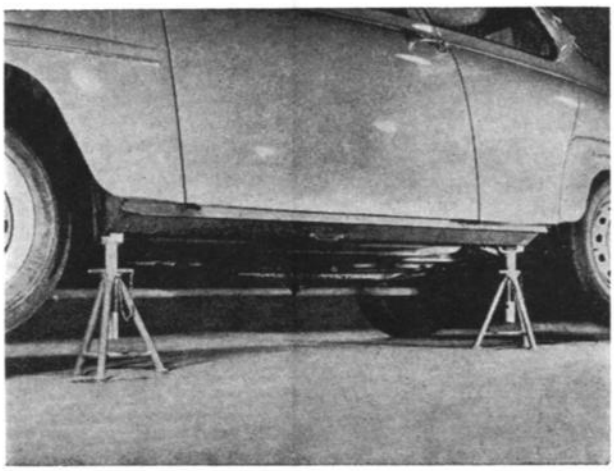

JACKING UP AND SUPPORTING ONE SIDE

Special tools — engine

Spare part and tool No.	Description	Indispensability 1	2	3	Illustration	Remarks
						Fords' order No.
786201	Strap tool for oil filter cartridge	1			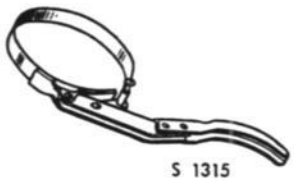 S 1315	GC 6883
786202	Lifting tool for power unit				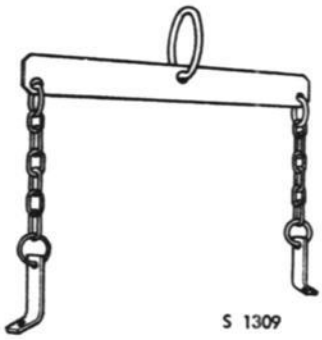 S 1309	GC 6000
786102	Valve seat cutter		2		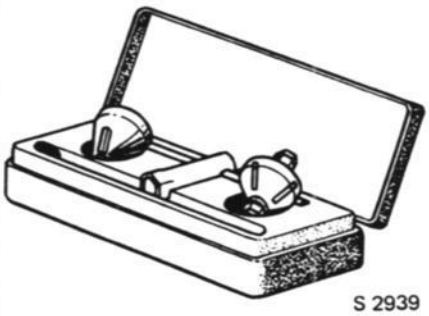 S 2939	Alternative to prior cutters spare parts
786103	Cutter 75°		2			
786104	Cutter 11° and 45°		2			
786105	Guide spindle		2			
786106	T-shaped key		2			

Special tools — engine (cont.)

Spare part and tool No.	Description	Indispensability 1	2	3	Illustration	Remarks
						Fords beställn.-nr
786210	Reamer, valve guide, over-size 0,2		2		 S 1325	GB 6085-B
786211	Reamer, valve guide, over-size 0,4		2			
786212	Reamer, valve guide, over-size 0,6		2			GB 6085-C
786213	Reamer, valve guide, over-size 0,8		2			GB 6085-D GB 6085-E
786214	Removing and centering tool, oil seal, balance shaft	1			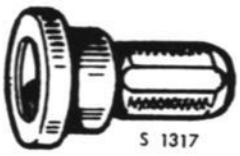 S 1317	GC 6059
786215	Installing tool, oilseal, balance shaft and bushing, distributor	1			 S 1316	GC 7600-B
786216	Removing tool, rear crankshaft seal	1			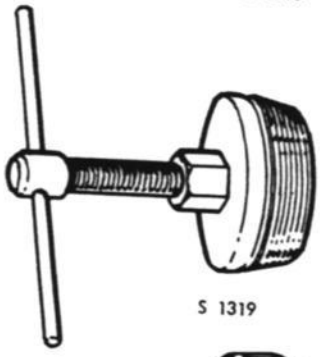 S 1319	GC 6701-A
786217	Installing tool, rear crankshaft seal	1			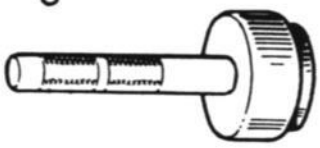 S 1318	GC 6701-B
786218	Removing tool, crankshaft gear	1			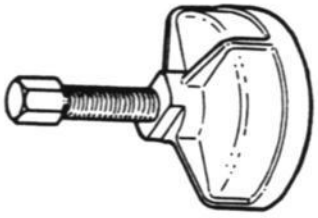 S 1320	GC 6306
786219	Installing tool, water pump shaft	1			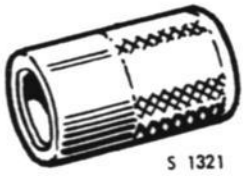 S 1321	GC 8501-A

Special tools — engine (cont.)

Spare part and tool No.	Description	Indispensability 1	2	3	Illustration	Remarks
786220	Installing tool, water pump impeller	1			 S 1322	GC 8501-B
786079	Floor stand			3	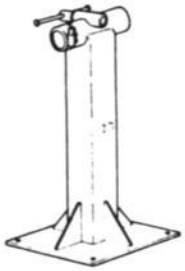 S 2940	Also SAAB 99
786087	Bench stand			3	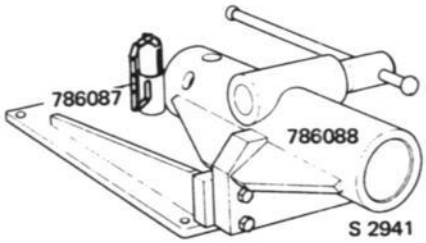 S 2941	
786088	Vise stand			3		Part of 786087 Also SAAB 99
786080	Oil pan			3	 S 2942	Also SAAB 99
839047	Shaft			3	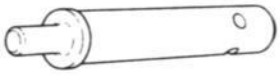 S 2943	Also SAAB 99
786085	Retainer, engine			3	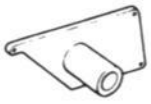 S 2944	
786147	Engine stand			3	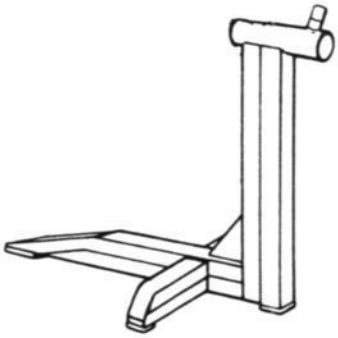	Alternative to 786079 Also SAAB 99

Special tools — engine (cont.)

Spare part and tool No.	Description	Indispensability 1	2	3	Illustration	Remarks
						Fords' order No.
786227	Removing tool, valve spring		2		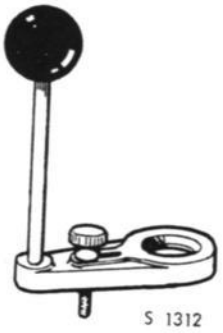 S 1312	GK 6513-A
786228	Installing tool, piston	1			 S 1314	
786098	Level tube, float level		2		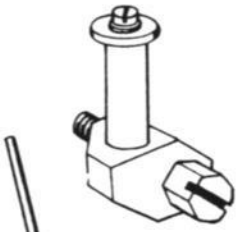	
786240	Valve retainer		2		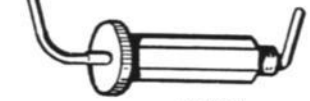 S 1313	GK 6513-B
786091	Key, fast idling setting			3	 S 2945	

Special tools — engine (cont.)

Spare part and tool No.	Description	Indispensability 1	2	3	Illustration	Remarks
839204	Adaptor, ignition timing	1			 S 2363	Fords' order No. Also SAAB 99
839205	Adaptor, dwell angle setting				 S 2364	Also SAAB 99
786062	Key, bolts, inlet manifold	1			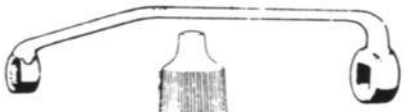	GK 9424
786051	LOCTITE locking liquid			3		Also SAAB 99
786805	Atmosit sealing compound, inlet manifold					
786050	Plastigage, for measuring bearing clearance	1			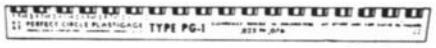 S 1328	

Special tools – transmission

Spare-part and Tool No.	Description	Indispensability 1	2	3	Illustration	Remarks
784064	Centering tool clutch–clutch disc	1				
784062	Dial indicator (incl. two spare points)	1			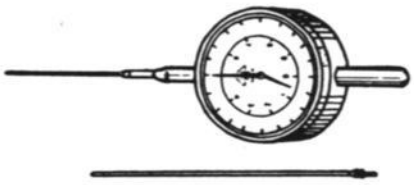	Also SAAB 99
784146	Measuring fixture, pinion adjustment		2		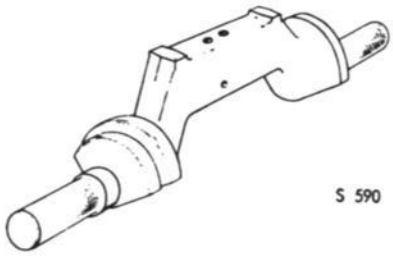 S 590	
879030	Installing and removing tool, freewheel		2			Also SAAB 99
879031 879032	Sleeve Key				 S 2368	spare parts
784237	Testing device for shimming of end-cover		2		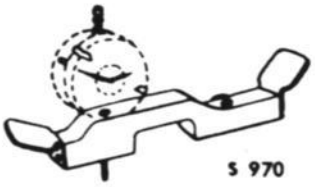 S 970	
784069	Holders, poppet balls (2)				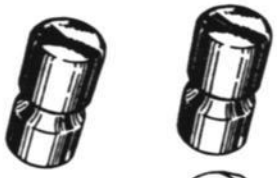	
784094	Wrench, intermediate shaft end nut, gearbox		2		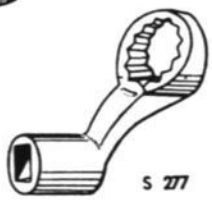 S 277	Up to and incl. gearbox No. F 108.910
786132	——— " ———					As from gearbox No. F 108.911

Special tools – transmission (cont.)

Spare-part and Tool No.	Description	Indispensability 1	2	3	Illustration	Remarks
784100	Assembling and disassembling fixture, transmission case		2		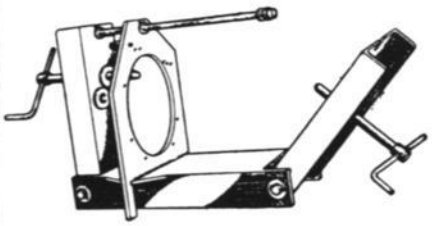	
784097	Attacher, dial indicator					
784085	Screw					Spare parts to 784100
784118	Bushing					
784119	Nut					
784126	Supplementary kit for earlier fixture, which was designed for 3-speed transmission only					
784101	Puller, pinion-shaft bearing		2		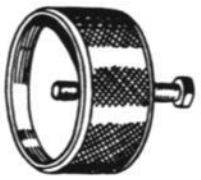	
784102	Aligning arbor, pinion shaft		2		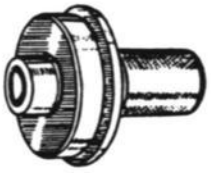	
784104	Driving-out arbor, primary shaft		2			
784106	Driving-on sleeve, pinion shaft		2			
784107	Driving-on sleeve, primary shaft		2			

Special tools – transmission (cont.)

Spare-part and Tool No.	Description	Indispensability 1	2	3	Illustration	Remarks
786134	Driving-on tool, intermediate-shaft gear		2		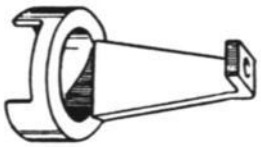	
784109	Installing tool, bearing		2			
786058	Arbor, intermediate shaft		2		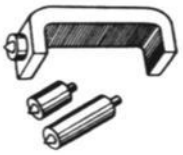	
784111	Point, short, for 784110					Spare part
784112	Point, medium, for 784110					Spare part
784113	Point, long, for 784110					Spare part
784114	Aligning arbor, primary shaft		2		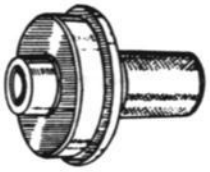	
784115	Puller, pinion-shaft bearing		2		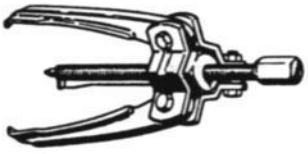	
784121	Supporting tool		2		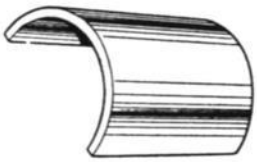	
786052	Puller, inner ring, pinion-shaft bearing		2		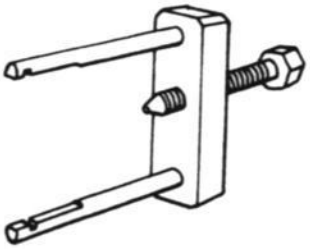	

Special tools — transmission (cont.)

Spare-part and Tool No.	Description	Indispensability 1	2	3	Illustration	Remarks
784122	Aligning arbor, pinion shaft		2		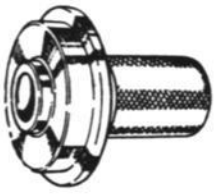	
784123	Supporting tool, gear		2		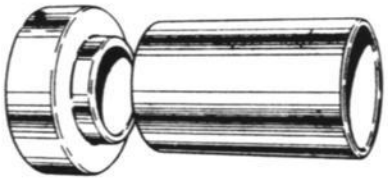	
784124	Locating key, intermediate shaft		2			
784125	Supporting tool, intermediate shaft		2		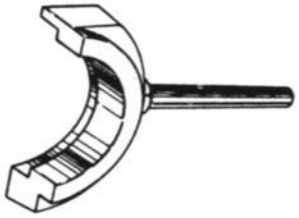	
784142	Driving-out arbor			3	 S 591	
784161	Circlip pliers, outer universal joint	1			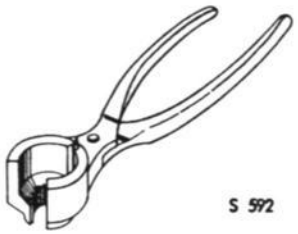 S 592	Also SAAB 99
784202	Arbor, outer universal joint	1			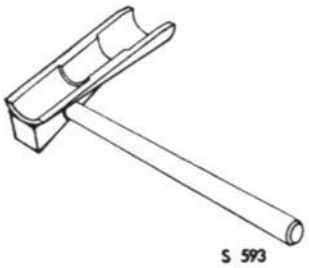 S 593	Also SAAB 99

Special tools — transmission (cont.)

Spare-part and Tool No.	Description	Indispensability 1	2	3	Illustration	Remarks
784220	Removing and installing tool, clutch shaft seal		2		 S 695	
783846	Protective cover, inner universal joints (required, 2)		2		 S 594	Also SAAB 99 model 1969
732373	Protective cover, bearing, inner drive shaft (required 2)		2		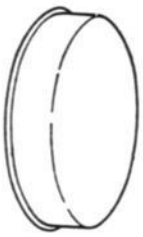	Also SAAB 99 model 1969
839153	Key, drain plug, gearbox	1			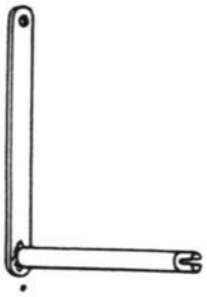 S 2365	As from gearbox No. F 118.182 Also SAAB 99
879036	Key, drain plug, gearbox				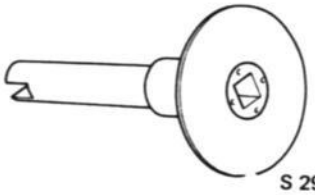 S 2946	Alternative to 839153 Also SAAB 99

Special tools – chassis

Spare-part and Tool No.	Description	Indispensability 1	2	3	Illustration	Remarks
784001	Rule, toe-in measuring	1			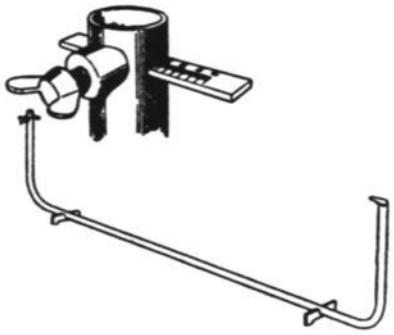	Also SAAB 99 Not necessary if other suitable equipment available
899569	Graduated scale					Spare part Also SAAB 99
784002	Puller, wheel hub	1			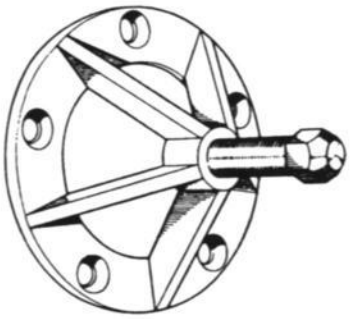	
784178	Screw for 784002	1				Spare part
899540	Extractor, tie rod end		2		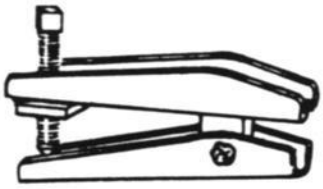 S 2366	Also SAAB 99

Special tools – chassis (cont.)

Spare-part and Tool No.	Description	Indispensability 1	2	3	Illustration	Remarks
784020	Spanner, shaft-seal nut, front wheel hub	1				
784030	Shaft, driving tools		2			
784032	Installing tool, rear-axle ball bearing		2		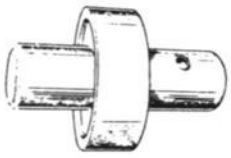	
784033	Installing tool, rear-axle ball bearing		2		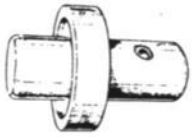	
784036	Installing sleeve, grease cup rear axle		2		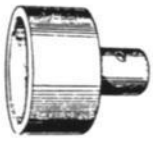	
784071	Wrench, steering-gear bearing housing 1 off	1				
783962	"	1				
784073	Removing and installing tool, bushing rear axle		2		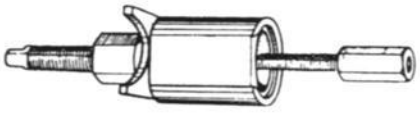	

Special tools – chassis

Spare-part and Tool No.	Description	Indispensability 1	2	3	Illustration	Remarks
784075	Installing arbor, frontwheel ball bearing		2		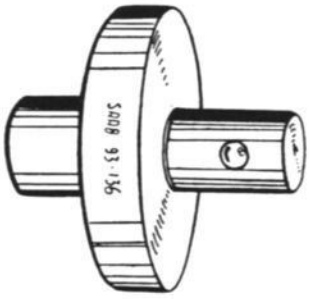	
784076	Supporting arbor for bushing, rear-axle link		2			
784081	Compressor, coil spring	1				
784082	Removing and inserting clamp, coil spring	1			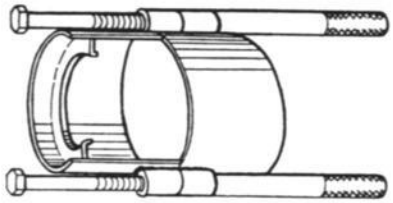	
784249	Bolt and nut					Spare parts for 784082
784133	Pressing tool, upper rubber bushing, control arm		2		 S 394	
784134	Pressing tool, lower rubber bushing, control arm		2		 S 395	

Special tools – chassis (cont.)

Spare-part and Tool No.	Description	Indispensability 1	2	3	Illustration	Remarks
786043	Clamp, brake piston	1			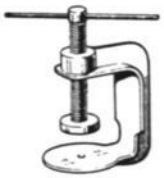 S 158	
784199	Pliers, circlip, master cylinder		2		 S 597	
784330	Pliers, hose clamps		2		 S 2367	Also SAAB 99
784464	Key, brake adjustment	1			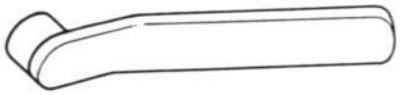 S 2947	

Special tools – miscellaneous

Spare-part and Tool No.	Description	Indispensability 1	2	3	Illustration	Remarks
829014	Aligning bench, body			3 3	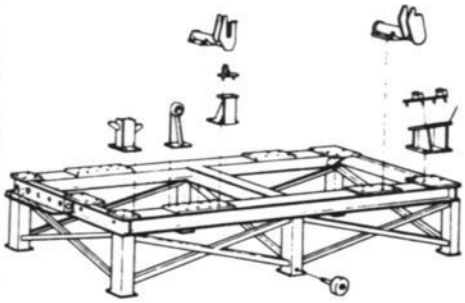 S 2369	Also SAAB 99
829027	Trestle cpl.			3	 S 2370	Also SAAB 99 Concerning intergral parts, see the spare parts catalogue group 1.
829032	Straightener			3	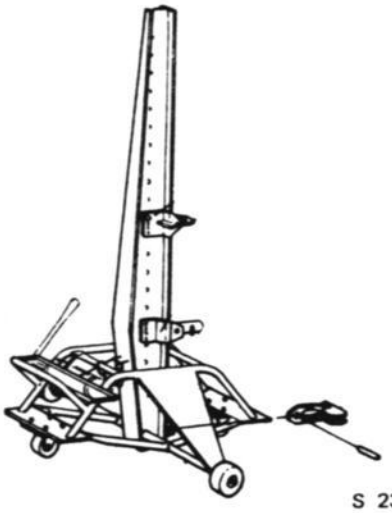 S 2371	Also SAAB 99

Special tools, miscellaneous

Spare part and tool No.	Description	Indispensability 1	2	3	Illustration	Remarks
784077	Aligning tool, body, diagonal measurements			3	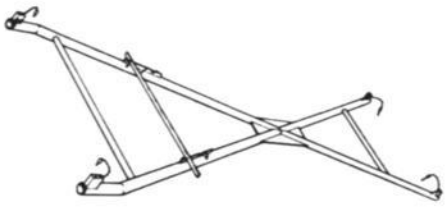	Reservdel
784168 784170 784144	Support for 784077 Locating pin for 784077 Modification kit for earlier aligning tool 784077		2		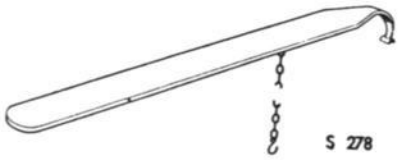 S 278	Spare part Spare part Spare part
784096	Tool for fitting of headlining		2			
784145	Aligning tool, front wheelhouses			3	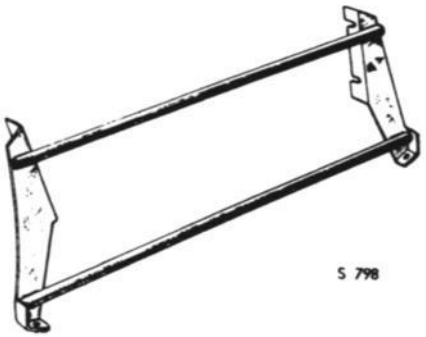 S 798	
786046	Aligning tool, power unit			3	 S 1327	
788416 788417 788418	Retainer, door Retainer Stay			3 3 3	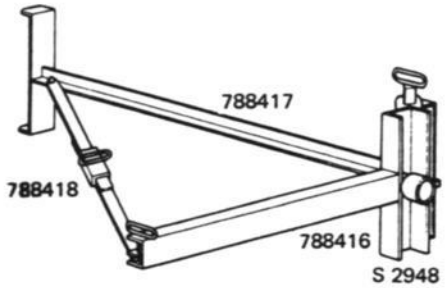 S 2948	Stand, see special tools engine 788416 and 788418, also SAAB 99
786057	Retaining tool, door window frame			3	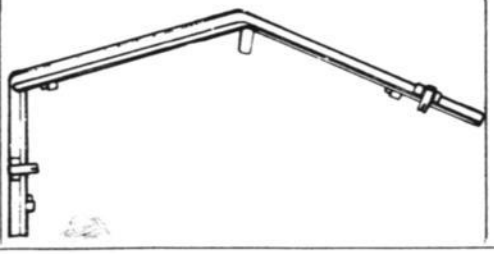	

Special tools – miscellaneous

Spare-part and Tool No.	Description	Indispensability 1	2	3	Illustration	Remarks
784093	Pliers, contact crimping of pre-insulated terminals			3		Also SAAB 99
786069	Pliers, contact crimping of uninsulated terminals		2			Also SAAB 99
786070	Pliers, contact crimping of round pegs		2			Also SAAB 99

GENERAL TOOLS

Hand tools

Hand tools are among the most important items of equipment in an automobile repair shop. It is highly important that an adequate range of suitable tools is available — and used.

Saab Service Information No. 20—2—134 contains a list of suitable tools to meet all requirements. The complete set of recommended tools can be seen in the adjacent illustration.

Other essential aids

This group includes tools and equipment which cannot be characterized as special tools but which, like hand tools, are obtainable through the normal channels of supply or can easily be made by the repair shop. Some of these items are indispensable, and even those which are not absolutely essential often considerably simplify repair jobs.

COMPLETE SET OF HAND TOOLS

STROBOSCOPE, 12-VOLT

Used for ignition adjustment. Essential.

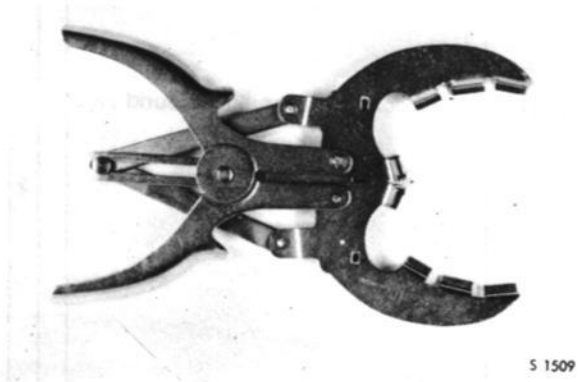

PISTON- RING TOOL

Used to extract and fit piston rings. Essential.

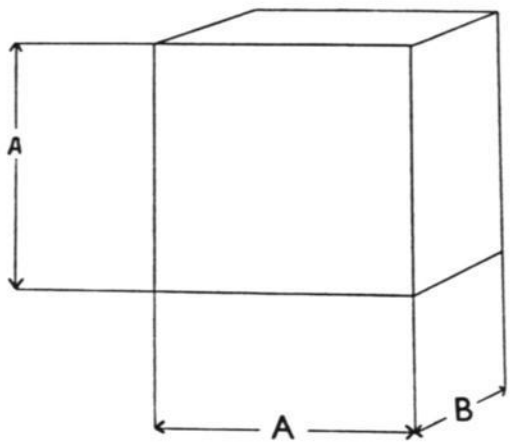

SUPPORT FOR TRANSMISSION CASE

Used when lifting out the engine, being placed under the transmission case. Made of hard wood.

A = 3½ in. (90 mm)
B = 2 in. (50 mm)

SERVICE INSPECTIONS

General

In order for the car-owner to enjoy trouble-free motoring at the lowest cost it is essential that the car receives the necessary care and attention.

The service book provided with every new car contains a number of vouchers and a specification listing the jobs which are necessary in the first instance for the proper maintenance of the car. The first voucher is for the Delivery Service which is carried out before the car is handed over to the customer.

The second voucher is valid for a free service inspection after 1,200 miles (2,000 km). Oil is to be paid by the car owner. The remaining vouchers are for service inspections carried out at intervals of 6,000 miles (10,000 km) and for which fixed prices are charged. Lubrication service and changing oil are included in the maintenance service, implying that the driver will have to do without his car for the shortest possible time, as servicing and lubrication are carried out simultaneously. In order to carry out these service inspections efficiently, a special place in the workshop should be reserved for them. This part of the shop should be fitted with all necessary equipment for lifting the car, checking wheel alignment, lubrication, adjusting headlamps, etc.

LUBRICATION

General

Proper lubrication is vital to good car maintenance and must on no account be neglected. The car should be lubrication serviced at intervals of 6,000 miles (10,000 km) or at least twice a year, subject to the use of SAAB Special Chassis Grease and to a strict watch being kept on the condition of rubber boots and seals. Lubrication service is therefore included in the regular service inspections carried out at intervals of 6,000 miles (10,000 km), for which vouchers are provided in the Service Book.
The intention is for service inspections and lubrication to be carried out at the same time by an approved service shop, thus reducing to a minimum the time during which the owner must do without his car.

> NOTE
> Always use only SAAB Special Chassis Grease for greasing jobs.

It is available as a spare part under reference SAAB Special Chassis Grease. The grease is stocked both in a cartridge pack (length 9.33 in. or 237 mm, diameter 2.09 in. or 53 mm) for a manual grease gun and in drums. Various makes of manual grease gun designed to take these grease cartridges are available, e. g. "Tecalemite" model 2840-Ta, with hose 110 B.

If, for some particular reason, SAAB Special Chassis Grease is not used, lubrication must be carried out more frequently, i. e. at intervals of 3,000 miles (5,000 km). SAAB Special Chassis Grease must not be mixed with ordinary chassis grease, so that either the one or the other must be used.
In some types of lubricating plant, difficulty may be experienced in feeding the grease to the grease pump. In such cases, a feeder lid can be fitted to the drum. Suitable lids are obtainable from suppliers of lubricating equipment.
Cleanliness is a matter of the utmost importance during lubrication work, as it is during all work on the car, and great care must be taken to avoid leaving grease marks on bodywork or upholstery.

> WARNING
> Caution must be observed when using SAAB Special Chassis Grease, as if spilled it may, in some cases, damage the paintwork of the car.

When lubricating the ball joints of the front assembly, the car should be jacked up to lift the wheels off the floor.

LUBRICATION TABLE, MODEL 1971

Lubrication Chart intervals 6.000 miles (10.000 km) or twice a year

Index	Lubrication points	Number	Lubricant	Instructions
1	Upper & lower ball joints, L & R	4	SAAB Special Chassis grease	Grease gun.
2	Steering gear and drag rod ends	3	SAAB Special Chassis grease	Grease gun. Steering wheel turned fully to the left. To the right on RHD cars.
3	Accelerator and clutch pedal	5	SAE 40 Oil	Oil can
4	Hydraulic brake system	1	Brake fluid according to SAE J 1703a or SAE 70 R 3	Check, intervals of max. 3 months*
5	Hydraulic operated clutch	1	Brake fluid according to SAE J 1703a or SAE 70 R 3	Check, intervals of max. 3 months
6	Handbrake links	3	SAE 40 Oil	Oil can
7	Hinges and locks	10	SAE 40 Oil	Oil can
8	Door stops	2	Vaseline	Grease
9	Tracker cam	1	Bosch Ft 1v4	Grease
10	Distributor, lubr. felt under rotor	1	Motor oil	Oil
11	Gearbox	1	EP oil SAE 80 according to API GL-4 or GL-5 (3 Imp. pints = 1.7 litres)	Check every 6.000 miles (10.000 km), change every 12.000 miles (20.000 km)
12	Latch, rear side window SAAB Station wagon	2	Vaseline	Grease
17	Engine	1	**Follow instructions on page 120-4**	Replace oil filter Use only original filter

* The brake fluid should be changed every 36.000 miles (60.000 km) or at intervals not exceeding 3 years.

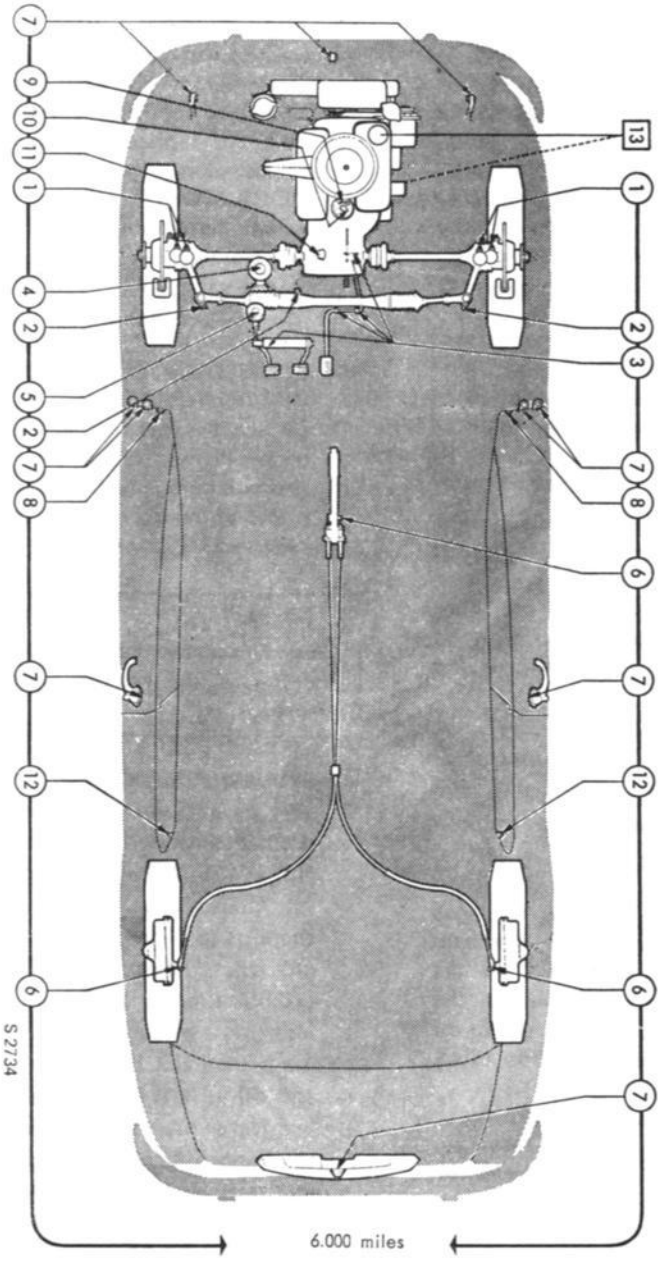

LUBRICATION CHART

Positions refer to the lubrication table on the preceeding page and the description on the following pages.

Lubrication interval: 6000 miles (10000 km) or at least twice a year

1. UPPER AND LOWER BALL JOINTS, LEFT AND RIGHT
   When lubricating the ball joints, the front of the car should be jacked up to lift the wheels off the floor. Turn each wheel outwards to provide easy access to ball joints and outer drive shaft universal joints.
2. STEERING GEAR AND TIE-RODS
   Avoid excessive lubrication of the steering gear.

> NOTE
> While greasing, turn the steering wheel to full left lock so that the grease penetrates also to the right-hand part of the steering gear.

Check that rubber boots are not abnormally swollen after lubrication and that they are free of defects likely to cause loss of grease. Defective parts must be renewed. The tie-rod grease nipples are more easily reached if the front part of the car is jacked up and the wheels turned full lock towards the opposite side.

3. THROTTLE CONTROL AND CLUTCH PEDAL
   All bearings belonging to the throttle-control assembly are accessible from inside the engine compartment. The clutch pedal should be lubricated at the bearing on the shaft.
4. BRAKE SYSTEM
   The brake-fluid reservoir must always be kept well filled. Check the fluid level once every 3 months and after bleeding the hydraulic system. At the same time, check that the breather holes in the cover are not choked. Always use the grade of brake fluid recommended in the lubrication table.
5. HYDRAULIC CLUTCH OPERATION
   The reservoir must always be kept filled with brake fluid up to the mark on the outside of the reservoir. Check the fluid level at least once every three months.
6. HANDBRAKE JOINTS
   One joint inside each rear wheel backplate, as well as the ratchet mechanism and joints at the handbrake lever.
7. HINGES AND LOCKS
   The various lubrication points are: four door hinges, two door locks with striker plates, one support and one lock for the luggage compartment lid. See Chapter 8. Striker plates should be treated with a lubricant that does not soil clothing. Door hinges are provided with special lubrication fittings, comprising a rubber plug with a through hole. To lubricate, press the oil can against the rubber plug.
8. DOOR STOPS
   Smear the door stops with a lubricant that does not soil clothing.
9. BREAKER CAM
   Grease with Bosch Ft 1 v 4.
10. DISTRIBUTOR, LUBRICATING FELT UNDER DISTRIBUTOR ARM
    Drench the felt pad in the upper end of the shaft under the distributor arm (which must be removed first) with oil. Lubricate the breaker cam assembly by greasing the actual cam. The distributor cap must be removed.

> NOTE
> Avoid excessive lubrication of distributor parts, as grease on the breaker points causes burning of these.

11. TRANSMISSION CASE
    The transmission case and differential are filled and drained through the same openings. As from gear box No. F 118.182, drain plugs of a new designation are introduced. Special tool No. 839153 is necessary for there plugs. The plugs are not interchangeable to the old ones. Check the oil level every 6,000 miles (10,000 km) by unscrewing the level-control plug and inserting a piece of wire in the opening. If the level is more than 0.2 in. (5 mm) below the plug opening, add oil until it flows through the level-control opening. Never mix two different sorts of oil. When about to change oil, run the engine for 15—20 minutes before draining off the dirty oil. Flush the transmission case and clean the magneto plug before filling with fresh oil until oil flows from the level opening. The transmission case and differential together hold about 3 US pints (1.4 liters).
    Change the oil in the transmission case for the first time after 1,200 miles (2,000 km), and thereafter at intervals of 12,000 miles (20,000 km) or at least once every year. Use EP oil, SAE 80, all the year round.
12. WINDOW CATCHES (OPENING SIDE WINDOWS)
    Smear the joints of the catch mechanism sparsely with vaseline.

In connection with reconditioning

When reconditioning, repack the following lubrication points with SAAB Special Chassis Grease.

Front wheel bearings.
Rear wheel bearings.
Outer shaft universal joint.
Inner shaft universal joint (the joint should be filled).
Oil change in engine should be done for the first time at 1200 miles (2000 km). Next oil change at 6000 miles (10.000 km) and then each 6.000miles (10.000 km). At these changes also the oil filter should be changed. Oil capacity 5.3 Imp. pints (3 litres), incl. oil filter 5.8 Imp. pints (3.3 litres).
Oil according to Fords specification ESE-M2C-101 B should be used.

Oil type: Engine oil SAE 10W 30
alt. SAE 10W 40
Winter, constant temperature
below —4°F=20°C SAE 5W 20

Warning! This grade of oil must not be used at temperatures above +32°F (0°C).

When changing the oil filter always use genuine filter.

When refilling the fuel tank

FUEL

Gasoline with an octane number of minimum 97 is recommended.

Other attention

When refilling the fuel tank, the following points should also be checked regularly. Top up as required:

1. The brake-fluid level in the master cylinders for brakes and clutch.
2. The electrolyte level in the battery.
3. The coolant level in the radiator.
4. The tire pressure.

Rear shock absorbers, Saab 95

Open the filler plugs on the rear shock absorbers on the Saab 95 in order to check the fluid content and refill if necessary.

Other lubrication

Whenever necessary, also lubricate the following points:

1. Lubricate the seat rails with chassis grease if stiff. Wipe off all superfluous grease to avoid staining clothes and upholstery.
2. Lubricate the felt bushings in the gear-shift shaft bearing moderately with paraffin oil whenever the bushing is removed.
3. Lubricate the gear-shift shaft bearing at the dash panel with SAE 40 oil.

Laying up

If the car is to be laid up for any length of time, e. g. during the winter months, it should first be lubrication serviced. To avoid corrosion and other internal damage to the engine, the engine oil should be changed. Also remove the battery and store it at room temperature in well-charged condition.

WASHING AND POLISHING

General

Proper care and attention is necessary to retain the gloss, durability and protective properties of the enamel finish.

Washing

A new car should be washed frequently in order to harden the enamel, improve its toughness and retain its gloss more effectively. Use water only, as additives tend to dry out the enamel. If washing with water does not suffice, however, a weak soap solution (not more than 2 %) can be used, but great care must be taken to remove all traces of it from the car after washing. This is best done by the generous use of water and thorough sponging. Never wash the car in strong sunshine, and always dry the enamel with a clean chamois leather. If the car is left to dry naturally in the sun, lime in the water may cause patchiness.

Polishing

Generally speaking, synthetic enamels should never be polished until polishing is absolutely essential. In any event, the enamel must not be polished until it has hardened properly, which takes about 5 or 6 months. The purpose of polishing is to impart an attractive appearance to the enamel finish and to provide it with fats to prevent drying-out. Never use polish containing an abrasive on a new car. Treatment of this kind may possibly be necessary after a number of years in order to remove oxidation products and suchlike from the finish. Always clean the car thoroughly before undertaking any form of polishing, as otherwise the finish will get scratched.

Waxing

After polishing, the car can be waxed. As with polishing, a new car should not be waxed until at least 5—6 months after enameling. After rubbing in the wax on a small area at a time, rub the surface very thoroughly to remove all accumulations of wax.

UNTERBODY COATING AND RUST-PREVENTIVE TREATMENT

Touching-up of underseal

To retain the advantages afforded by underseal composition, the underbody, too, should be regularly inspected and the underseal touched up as necessary. Apart from protecting against corrosion, the underseal improves sound insulation. This protection is particularly important with regard to the fenders, which are continuously exposed to wear from a constant barrage of flying stones and gravel. Before covering worn or bare parts with fresh underseal composition, clean the metal thoroughly with a scraper and a steel-wire brush and then wash with gasoline or suchlike. Before applying of rust inhibitive, and then apply an approx. 0.06 in. (1.5 mm) coating of composition before the rust inhibitive has dried. Excessive application will result in the composition running and it may even pull right away from the metal which it is intended to protect.

Naturally, new metal panels, such as fenders, must always be treated in a similar manner after fitting. If underseal is applied prior to spraying it is essential that all composition be washed off the surfaces which are to be enameled.

Rust-preventive treatment

SAAB cars are given an underbody coating before they leave the factory.

In spite of this there is risk of corrosion due to salt and other preparations used on the roads. The underbody coating is subject to constant wear from gravel and grit. We therefore recommend that the underside of the car be examined at least once a year. This is particularly important in areas where cars are specially liable to corrosion. Where necessary the car can be given a rust-preventing treatment by the application of some well-known type of rust-preventing treatment by the application of some well-known type of rust-preventive by a specialist firm.

Treatment with rust-inhibitives

In order to prevent corrosion, the body should be treated once a year with a reputable make of rust-inhibitive, proceeding in the manner prescribed by the manufacturer thereof. The parts of the Saab body requiring protection against corrosion are indicated in the following description.

SAAB 96 AND SPORT

To facilitate anti-corrosion treatment, the following parts should be removed from the car:

1. Wheels and hub caps.
2. Battery.
3. Door and side panel trims. Remember to refit the cardboard for water deflection in the doors.
4. Rear seat cushion and back.
5. Mats.
6. Spare wheel and tools. Trunk floor.
7. Scuff plates. The four covers must be sealed effectively when refitted.

Drilling of holes for spraying

Holes drilled for spraying must be 11 mm 0.43 in. or less. 11-mm holes can appropriately be plugged with plug No. 716306.

The following parts of the body are to be treated by spraying:

1. The insides of the scuff. plates through the holes provided in the front and rear end, and through a hole drilled in the middle of the underside of the scuffs. See fig. This hole must be plugged.
2. The filler plate on the scuff plate at the rear door pillar, is to be folded out and sprayed inside.
3. The wheelhouses and the entire underside, all seams and joints. The insides of the front and rear fenders, especially the joints between the body and the fenders. Note! Cover the holes leading in to the engine compartment.
4. The front and rear spring supports through holes drilled as indicated in the sketch. The holes must be plugged.
5. The front shock-absorber bracket through holes drilled as indicated in the sketch. The holes must be plugged.
6. The muffler bracket on the rear, righthand wheel house. Spray thoroughly at point of attachment to wheel house.
7. The real-axle tunnel, especially round the rear-axle attachment to the body.
8. Brake and fuel pipes in channels on the floor, joints and seams on the inside of the floor. The space between the seat member and the floor as well as the rear side valances, especially the lower part. The insides of the doors especially at seams between inner and outer plate.
9. The real axle tunnel through the two large openings and through hole drilled in the middle of the tunnel about 20 mm. (3/4 in.) from the foor. The hole must be plugged. See item 1.
10. Spray with reduced pressure inside the doors and on the hinges. Spray towards the door bottoms. Don't spray the lock mechanism.
11. The space around the fuel tank and the spare wheel compartment. The rear crossmember in the spare wheel compartment through the two holes provided.

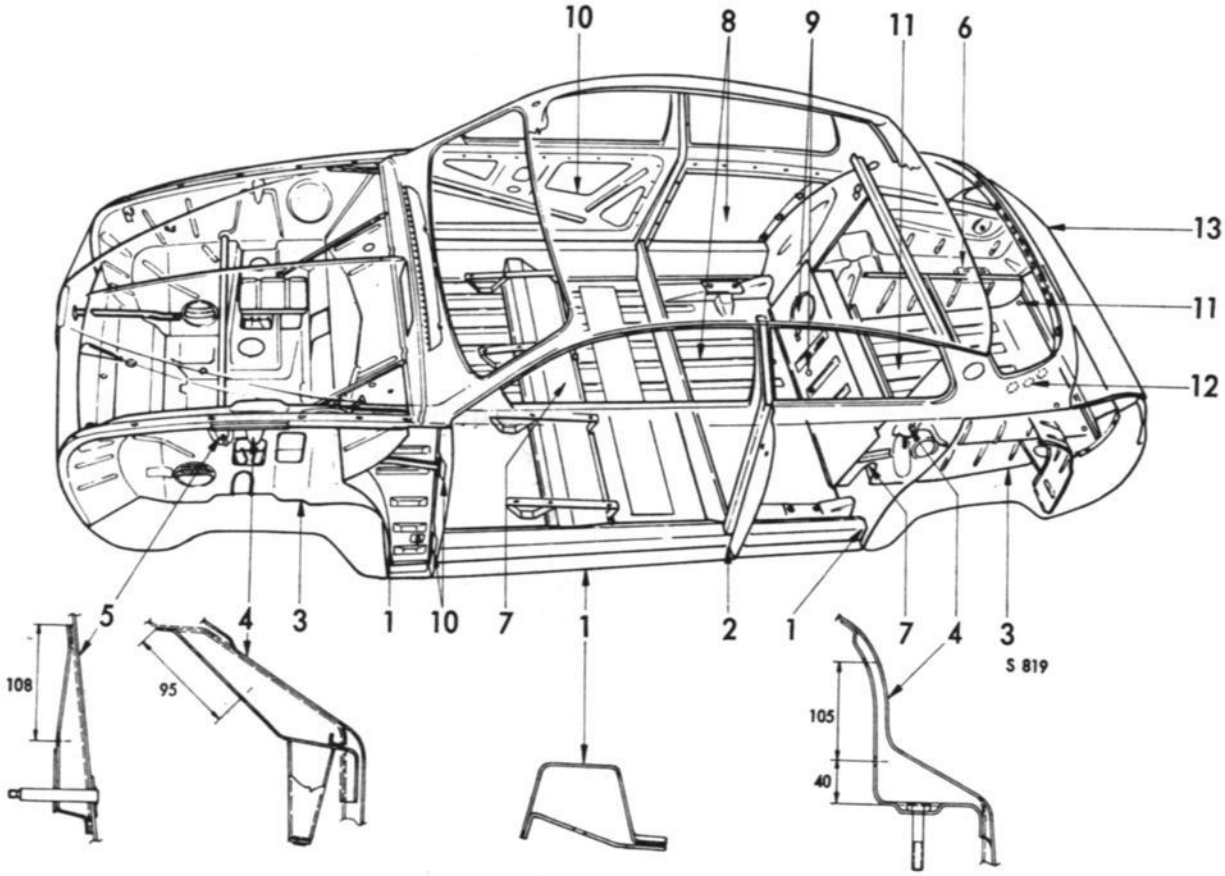

RUSTPREVENTING TREATMENT SAAB 96, SPORT AND MONTE CARLO 850

Positions refer to the text on this and the preceeding page.

12. The ventilation duct through the holes from the luggage compartment.
13. The luggage compartment door between the inner and outer panels (sparingly). The insides of the bumpers. Don't spray on the paintwork.

> NOTE
> Mask carefully brake discs and brake housings when spraying.

The following details are to be treated by brushing:

Battery ledge, hub caps and mouldings.

SAAB 95

To facilitate rustpreventing treatment, the following parts should be removed from the car:

1. Wheels and hub caps.
2. Battery.
3. Door and side panel trims. Remember to refit the cardboard for water deflection in the doors.
4. Rear seat cushion and back.
5. Mats.
6. Spare wheel and tools. Trunk floor.
7. Scuff plates. The four covers must be sealed effectively when refitted.

Drilling of holes for spraying

Holes drilled for spraying must be 11 mm 0.43 in or less. 11-mm holes can appropriately be plugged with plug No. 716306.

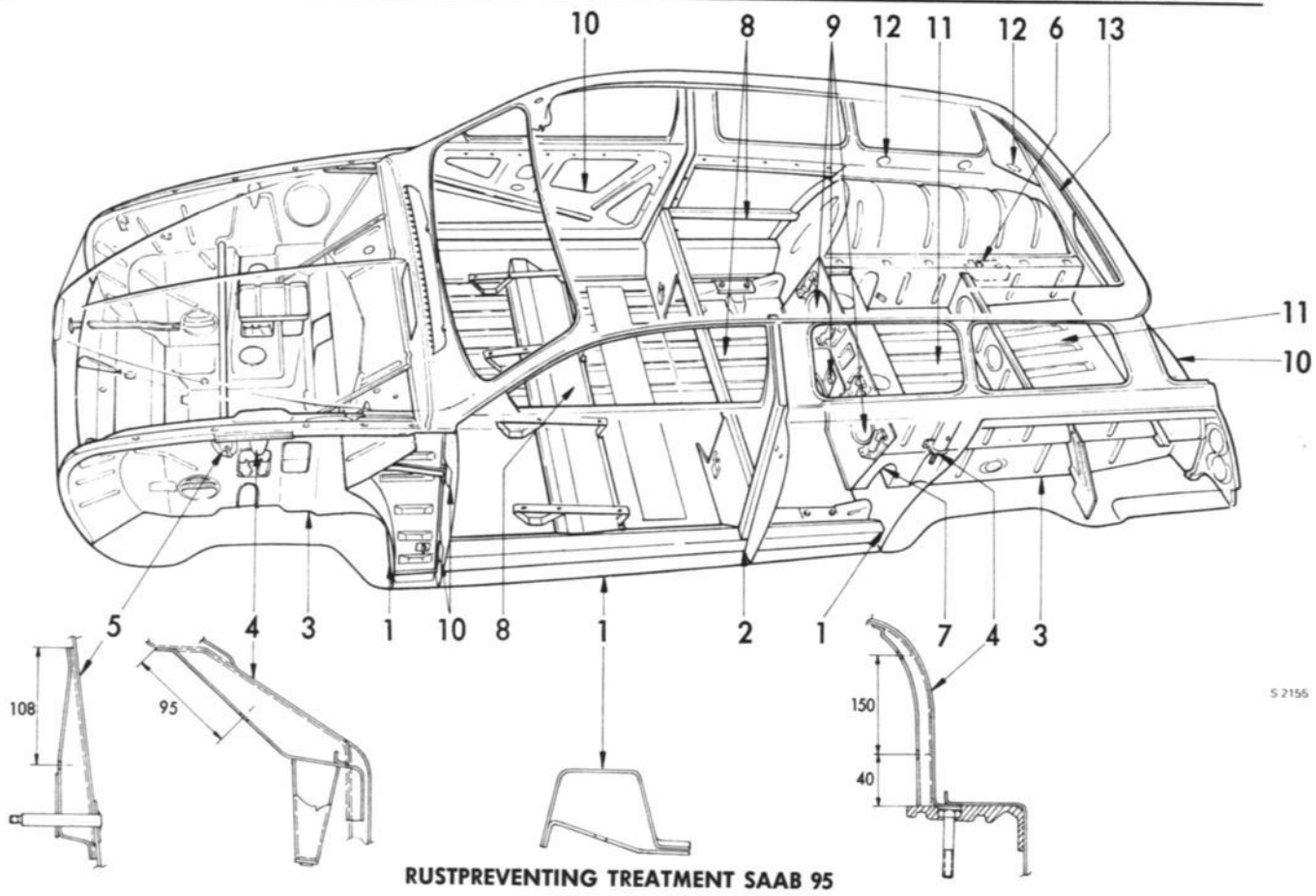

RUSTPREVENTING TREATMENT SAAB 95
Positions refer to the text below.

The following parts of the body are to be treated by spraying:

1. The insides of the scuff plates through the holes provided in the front and rear end, and through a hole drilled in the middle of the underside of the scuffs. See fig. This hole must be plugged.
2. The filler plate on the scuff plate at the rear door pillar, is to be folded out and sprayed inside.
3. The wheelhouses and the entire underside, all seams and joints. The insides of the front and rear fenders, especially the joints between the body and the fenders. Note! Cover the holes leading into the engine compartment.
4. The front and rear spring supports through holes drilled as indicated in the sketch. The holes must be plugged.
5. The front shock-absorber bracket through holes drilled as indicated in the sketch. The holes must be plugged.
6. The muffler bracket on the rear, righthand wheel house. Spray thoroughly at point of attachment to wheel house.
7. The rear-axle tunnel, especially round the rear-axle attachment to the body.
8. Brake and fuel pipes in channels on the floor, joints and seams on the inside of the floor The space between the seat member and the floor as well as the rear side valances, especially the lower parts. The insides of the doors especially at seams between inner and outer plate.
9. The rear axle tunnel through the two large openings and through hole drilled in the middle of the tunnel about 20 mm. (3/4 in.) from the floor. The hole must be plugged. See item 1.
10. Spray with reduced pressure inside the doors and on the hinges. Spray towards the door bottoms. Don't spray the lock mechanism.
11. The space between the fuel tank, and the foot-space floor all joints and seams.
12. The vent duct, through the round holes provided under the rear side windows. Through the round vent holes in the gusset plate at the rear side wall partly straight rearwards out into the fins, partly upwards towards the roof. Upwards to be sprayed with reduced pressure in order not to damage the headlining.
13. Air slot, through holes on the underside.

> NOTE
> Mask carefully brake discs and brake housings when spraying.

The following details are to be treated by brushing:

Battery ledge, hub caps and mouldings.

CONTENTS

DESCRIPTION

General

The engine is a four-cylinder, water-cooled, overhead valve unit, with the cylinders arranged pairwise in a 60° Vee formation, and operates on the four-stroke cycle.
The carburetor is a single downdraught carburetor with an automatic choke device.
The cylinder heads have separate inlet ports and common exhaust ports for each bank of cylinders.
Engine balance is provided for by means of a balance shaft, located on the righthand side of the block. It is driven by the crankshaft and revolves at engine speed. The crankshaft and camshaft run in three bearing bushes, whereas the balance shaft runs in two.

Cylinder block

The cylinder block is of special cast iron and is cast in one piece. The cylinder bores, which are surrounded by cooling jackets, are machined directly into the cylinder block. Oil drillings for the lubrication system are provided in the cylinder block.

Cylinder heads and valves

The two fully identical cylinder heads are bolted to the cylinder block. The combustion chambers are partly machined and have 0.551 in. (14 mm) threads for spark plugs. The valves of special steel are suspension-mounted in the cylinder heads. The valves operate in guides machined directly in the cylinder head and there are thus no separate valve guides and valve seats.

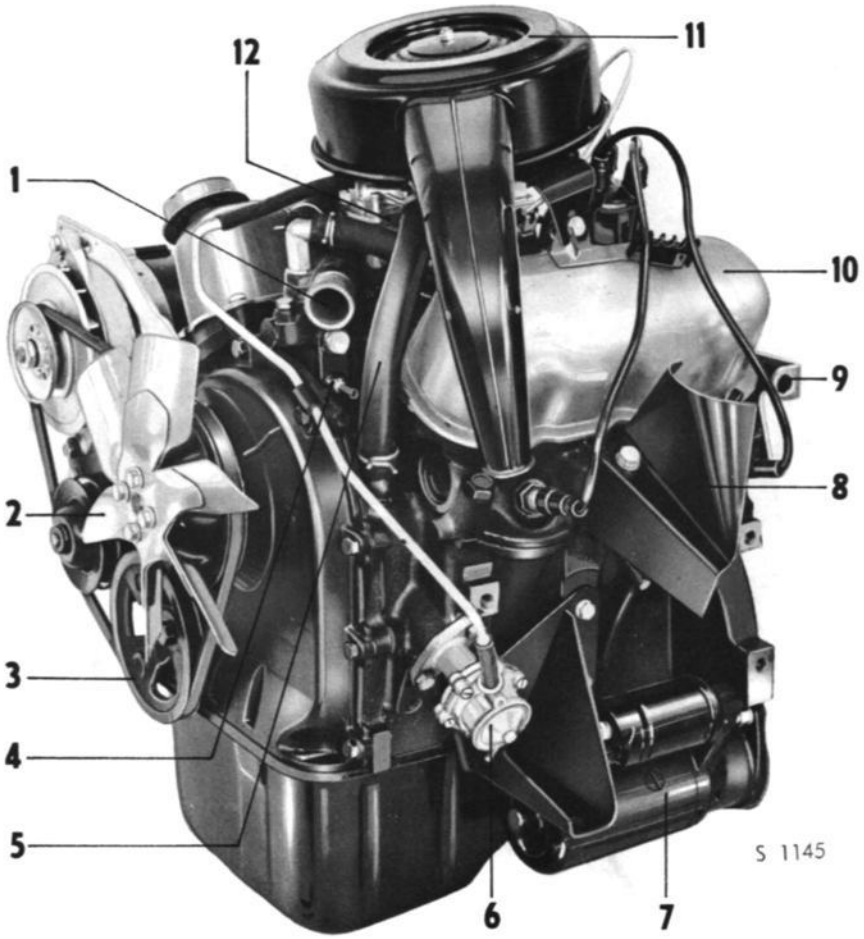

ENGINE, LEFTHAND VIEW

1. Hose connection, upper radiator hose
2. Water pump
3. Balance shaft pulley
4. Temperature transmitter
5. Hose, crankcase ventilation
6. Fuel pump
7. Starter
8. Preheater plate
9. Bracket, engine side stay
10. Valve casing
11. Air filter
12. Carburetor

Crankshaft with bearings

The cast-iron crankshaft has hardened and ground bearing journals. It runs in three main bearings, the middle one of which also serves as an axial guide bearing. Oilways for lubricating oil are drilled in the shaft. All main bearing inserts are interchangeable.

Camshaft and tappets

The camshaft is a cast unit with hardened and phosphated cams. It is driven by the crankshaft via a gear with a ratio of 2:1. To ensure quiet running, the camshaft gear is made of fiber. Guidance in the axial direction is provided by a thrust plate located in the front end of the shaft. The axial clearance is determined by a spacer located behind the said thrust plate. The tappets are actuated directly by the camshaft. They are carried in the cylinder block and transmit the movement to the valves via push rods and rockers. The tappets are accessible upon removal of the cylinder heads.

Connecting rods, pistons and piston rings

The connecting rods are shrunk onto the piston pins and are thus not detachable from the pistons. Consequently, only a piston with connecting rod is available as a spare part. The big-end bearing inserts are readily exchangeable.

The pistons are made of aluminium. They have grooves for two compression rings and one oil control ring. The upper compression ring is chromeplated and plain. The lower compression ring has oil-scraping properties. The oil control ring itself is tripartite.

ENGINE RIGHTHAND VIEW

1. Automatic choke
2. Distributor
3. Water distribution pipe
4. Clutch
5. By-pass line
6. Flywheel
7. Oil filter
8. Oil drain plug
9. Hose connection, lower radiator hose
10. Water pump
11. Alternator
12. Oil filler cap

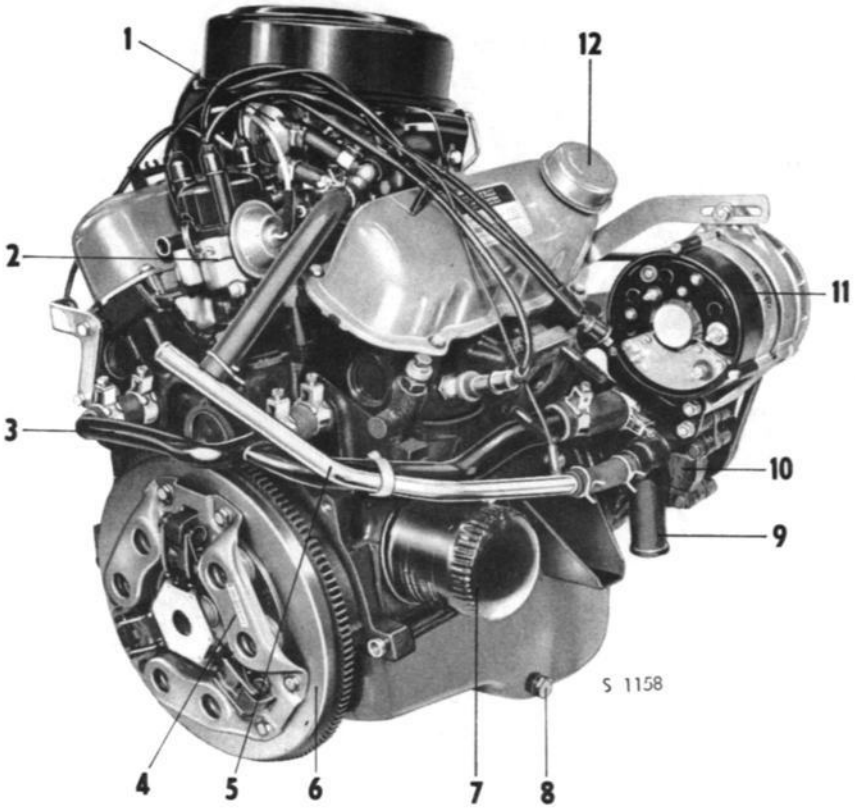

Lubrication system

The engine lubrication system is of the forced feed type — see fig. The pressure is generated by a rotor-type pump driven by the camshaft. The pump is mounted in the oil pan under the crankshaft. The pump rotor forces the oil past a relief valve incorporated in the pump itself and on through the oil filter and oilways to the various lubrication points. The oil filter is of the full-flow type, which means that all oil force-fed to the lubrication points passes through the filter.

Oil pump, relief valve

The oil pump (see fig.) is of the bi-rotor type. Its shaft is connected to the distributor shaft which is driven by the camshaft via an angle drive. When the pump is working, oil is drawn into the spaces formed between the inner and outer rotors from the suction side to the discharge side. The pump suction line is fitted with a strainer.

The relief valve is incorporated in the pump body and consists of a spring-loaded plunger. The valve opens at a pressure of 45—55 p.s.i. (3,2—3,9 kp/cm²) and admits oil to the suction side of the pump.

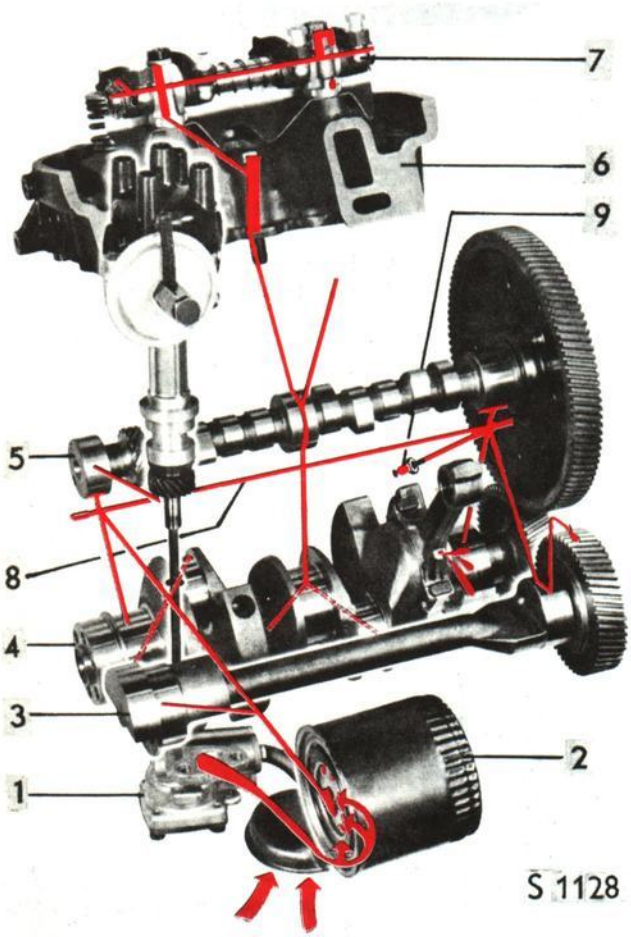

LUBRICATION SYSTEM

1. Oil pump
2. Oil filter
3. Balance shaft
4. Crankshaft
5. Camshaft
6. Cylinder head
7. Rocker assembly
8. Gallery line
9. Oil pressure switch

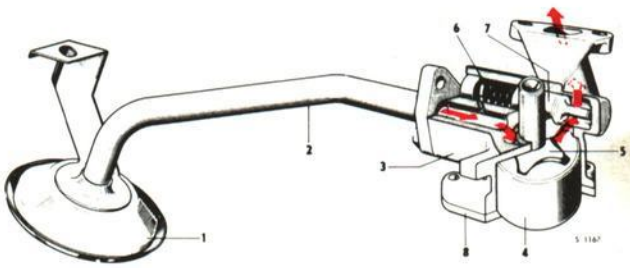

OIL PUMP, DISMANTLED

1. Housing with strainer
2. Suction line
3. Pump body
4. Birotor
5. Rotor
6. Spring
7. Relief valve
8. Cover

Oil filter

The oil filter (see fig.) is made as a unit complete with cartridge. The filter is of the full-flow type and is screwed directly onto the cylinder block. The oil forced out to the various lubrication points in the engine passes first through the oil filter. The filter is fitted with an overflow valve which allows the oil to flow past the filter if flow resistance becomes excessive due to clogging of the filter.

Ignition system

The distributor is driven by the camshaft via a bevel gear. The rotor revolves in the clockwise direction. The firing order is 1—3—4—2. The ignition timing in relation to the engine speed is regulated by a centrifugal governor and in relation to the load by a vacuum governor.

Fuel system

The diaphragm-type fuel pump draws fuel up from the tank to the carburetor. The pump is located on the left-hand side of the engine and is driven by the camshaft by means of a push rod from a special cam on the shaft. The pump is equipped with an idling device which ensures that pumping is no longer effective when a sufficiently high pressure has been attained. On its way to the carburetor, the fuel passes through a nylon filter housed in the fuel pump. The filter is accessible upon removal of the pump cover.

As from model 1970, a filter is also installed in the hose between the fuel pump and the carburetor.

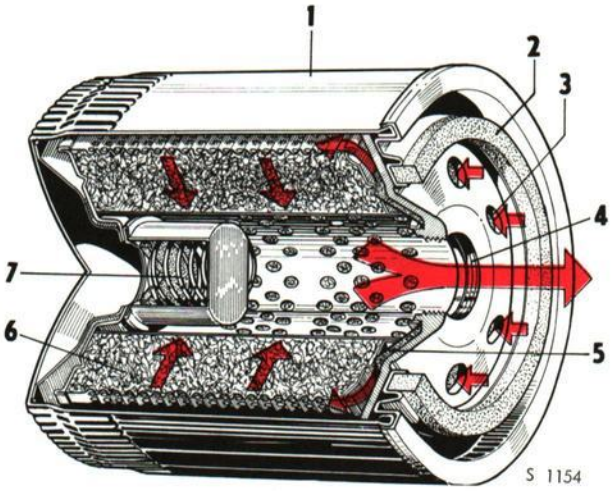

OIL FILTER

1. Filter housing
2. Rubber seal
3. Oil inlet
4. Oil outlet
5. Check valve
6. Filter part
7. Overflow valve

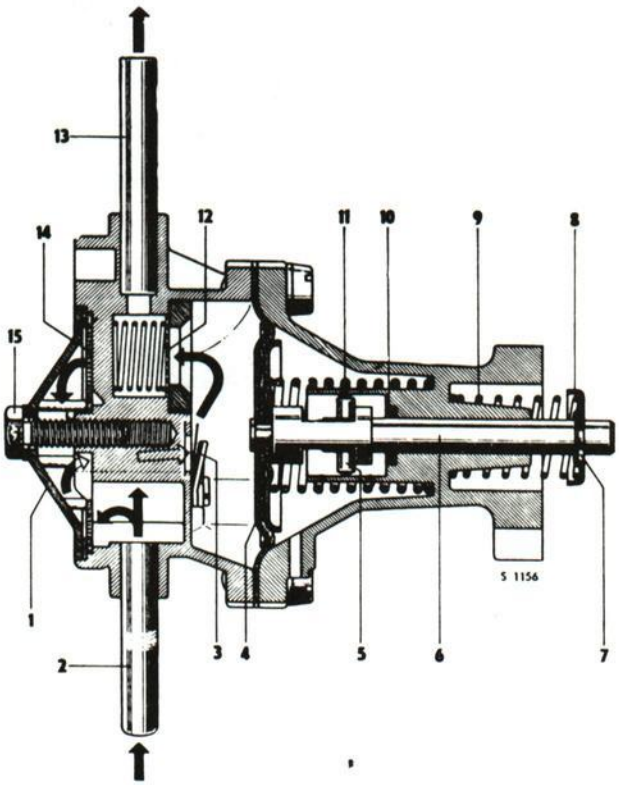

FUEL PUMP, SECTIONED

1. Cover
2. Fuel inlet
3. Inlet valve
4. Diaphragm
5. Retaining pin
6. Diaphragm rod
7. Lock washer
8. Retaining washer
9. Return spring
10. Seal
11. Compression spring
12. Outlet valve
13. Fuel outlet
14. Filter
15. Screw for cover

Fuel tank as from model 1971

As from model 1971, the fuel tank is designed so as to allow internal expansion of the fuel. The expansion space is opened by a valve which is actuated by the filler cap.

Fuel tank ventilation

When fuel is poured in, the tank (1) will not be completely filled, and instead the level rises only slightly above the lower opening on the venting tube (3). The reason for this is that an air cushion is formed above this level and prevents further filling of the tank.

The formation of this air cushion is due in its turn to the fact that a spring-loaded valve (5) located in the filler pipe (2) blocks the upper opening on the venting tube (4) from the upper side of the tank.
When the tank cap (7) is screwed on, a lever is actuated which opens the valve, thus providing a communication from the upper part of the tank to the surrounding air via the ventilation hose (6) which runs out under the rear fender. The fuel, which increases in volume when the temperature rises, is now able to expand inside the tank instead of being pressed up through the filler pipe (2). As the fuel level becomes lower in course of driving, air is drawn into the tank via the ventilation hose (6).

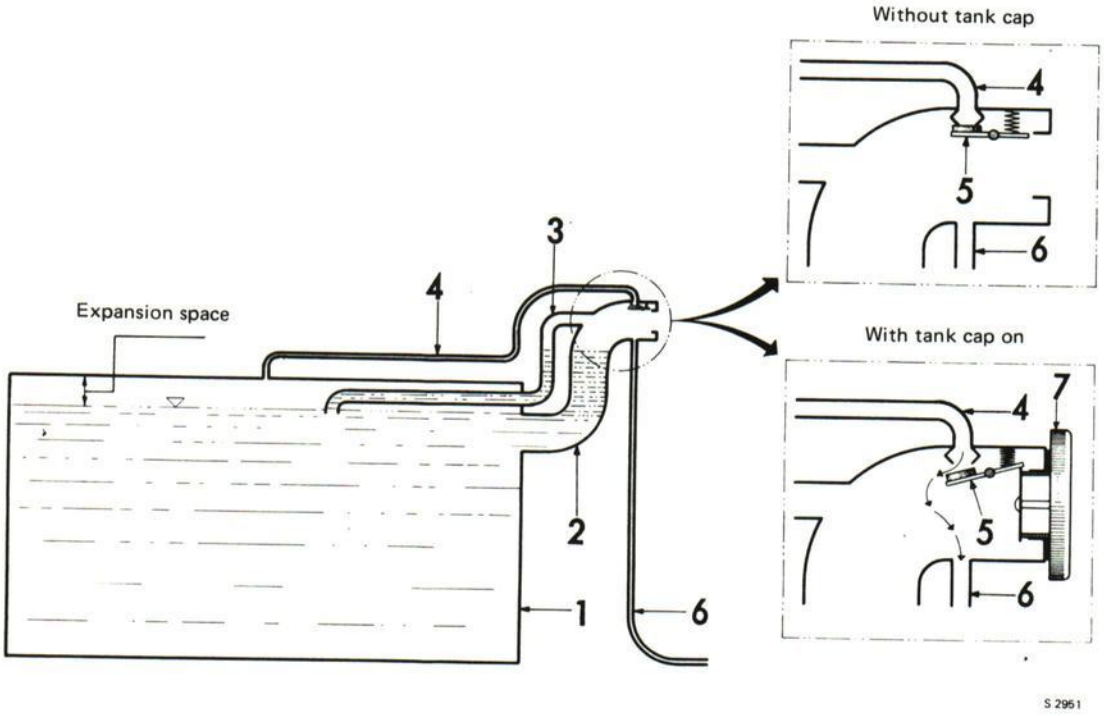

FUEL TANK VENTILATION, ARRANGEMENT DIAGRAM

1. Fuel tank
2. Filler pipe
3. Venting tube
4. Venting tube
5. Spring-loaded valve
6. Ventilation hose
7. Tank cap

Evaporative loss control unit USA cars as from model 1971

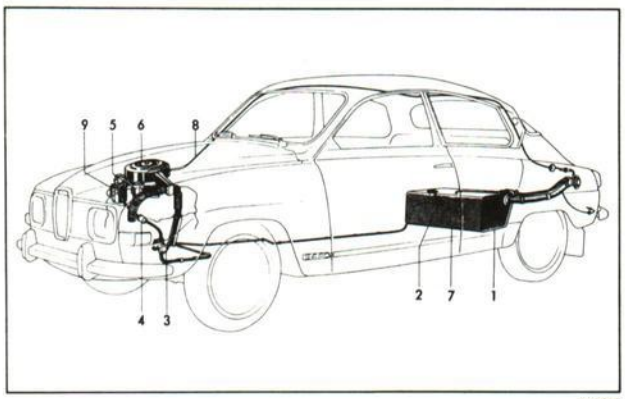

S 2897

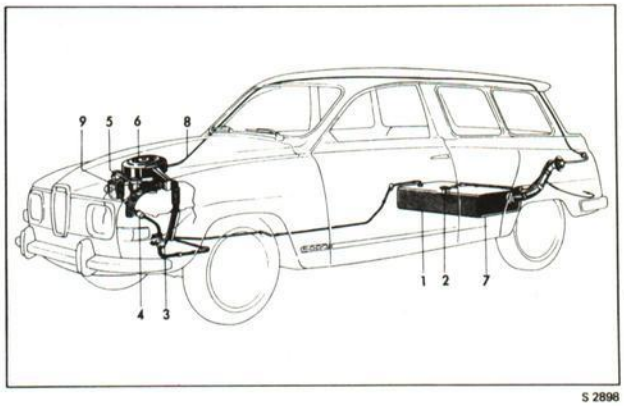

S 2898

FUEL SYSTEM USA-CARS AS FROM MODEL 1971

1. Fuel tank
2. Fuel transmitter
3. Fuel pump
4. Fuel filter
5. Carburetor
6. Suction silencer with aircleaner
7. Drain plug (accessible from beneath the car)
8. Vapor hose
9. Charcoal canister

The evaporative loss controll unit includes a charcoal canister which is placed in the engine compartment. It absorbs the vapor from the tank when the engine is not running. The charcoal is purged when the engine is running. This is achieved by fresh air which is sucked through the filter in the bottom of the canister and further to the carburetor.

The canister filter should be renewed at intervals according to the directions given in the Service Book.

Carburetor

The carburetor is a Solex downdraught carburetor.
Up to and includ. engine No. 16.100 (chassis No. -434.173 for the Saab 96 and Monte Carlo, and -46.137 for the Saab 95) the designation is 28-32 PDSIT-7. As from engine No. 16.101 (chassis No. 434.174- for the Saab 96 and Monte Carlo, and No. 46.138- for the Saab 95), the designation is 32 PDSIT-4.
As from model 1969, the carburetor is of the FoMoCo make.
The fuel supply is regulated by fixed jets mounted in the carburetor body. The body contains not only fuel drillings but also air drillings and a certain amount of air is mixed with the fuel at an early stage in the emulsion tube.
The carburetor features an automatic choke device with rapid idling, an acceleration pump and a pressure-controlled booster system known as an econostat. The various carburetor functions are dealt with in the following sections.
The illustrations show carburetor 28—32 PDSIT-7, but the functions described refer to carburetor 32 PDSIT-4 as well.

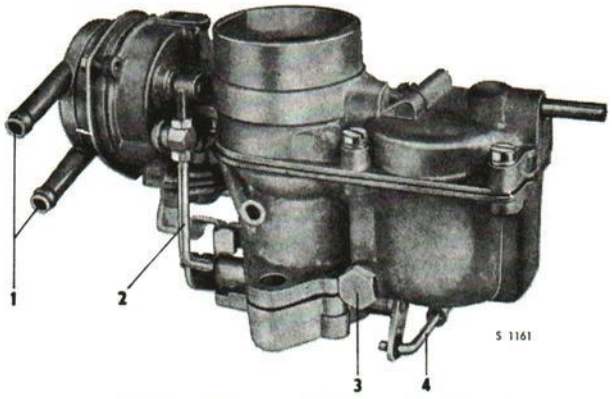

CARBURETOR, RIGHTHAND VIEW UP TO AND INCL. ENGINE NO. 16.100

1. Water connections
2. Control link, fast idling
3. Plug for main jet
4. Control link, acceleration pump

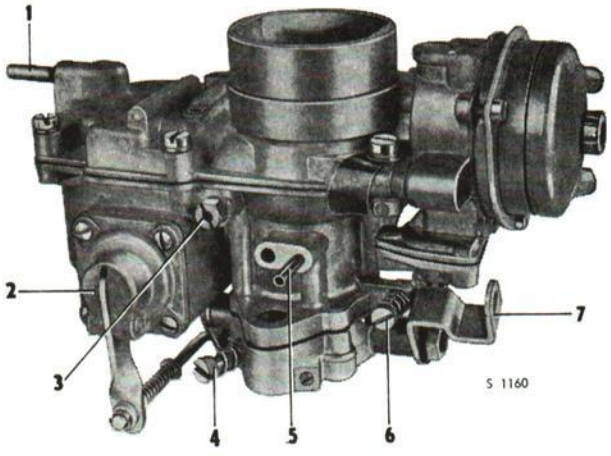

CARBURETOR, LEFTHAND VIEW UP TO AND INCL. ENGINE NO. 16.100

1. Fuel inlet
2. Acceleration pump
3. Idling fuel jet
4. Air-regulating screw, idling mixture
5. Vacuum outlet
6. Adjusting screw, idling
7. Throttle control

Float

The fuel level in the float chamber is adjusted by means of the float. As the fuel flows into the chamber, the float is lifted up and presses the needle valve against the seat. As soon as the correct level is reached, the fuel supply is cut off. The procedure is repeated when the level falls. The float is made of nylon and is fitted with a fixed lever. In order to keep the float level stable, the needle valve

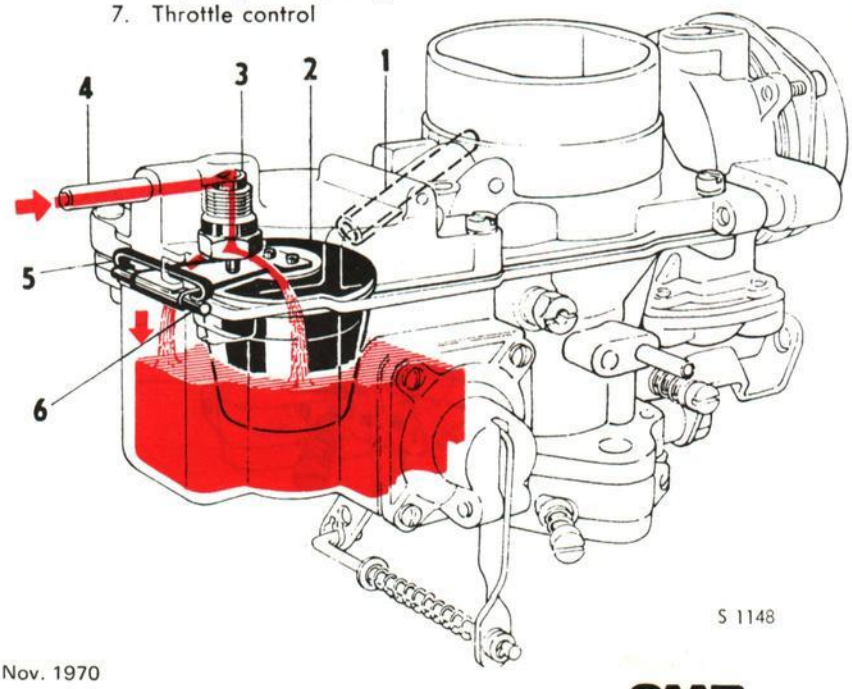

FLOAT SYSTEM

1. Ventilation duct
2. Float
3. Float valve
4. Fuel hose connection
5. Holder
6. Shaft

is fitted with a spring-loaded ball. The float chamber is internally ventilated, i.e. the ventilation emanates in the neck of the carburetor. Carburetor 32 PDSIT-4 is, however, equipped with a valve which opens when the throttle valve is closed, the float chamber then being ventilated outwards.

Choke device with rapid idling

To facilitate cold-starting, the carburetor is equipped with a spring-loaded strangler flap in the upper part of the carburetor neck. When the flap is closed, the underpressure below it increases and so does the fuel supply. The strangler flap is regulated automatically by means of a bimetal spring the function of which is directly dependent on the prevailing coolant temperature. The bimetal spring keeps the choke closed as long as the engine is cold, but as the temperature of the cooling water rises the strangler flap gradually opens and is wide open at a temperature of 140—149°F (60—65°C.)

The starting automatics feature a vacuum-regulated diaphragm which, via a pull rod, opens the strangler flap slightly as soon as the engine has started, thus providing sufficient engine air and preventing suffocation.

To ensure that this demand will be satisfied even when the vacuum falls in conjunction with acceleration, a device is provided which on such occasions forces the strangler flap to open. The starting automatics include a ratchet device (ratchet wheel with three steps) which serves to increase the idling speed when starting from cold. The ratchet wheel is controlled by the bimetal spring and the amount of increase in idling speed is determined by the position adopted by the ratchet wheel.

In order to engage the fast-idling device when starting from cold, the accelerator pedal must be pressed right down and then released before an attempt to start is made. This is necessary in order to release the ratchet wheel, thus enabling the latter to take up the position decided by the bimetal spring. The throttle flap is then actuated by the adjustable control rod and the idling function of the throttle flap is now moved from the idling screw to the ratchet wheel.

Idling system

When the engine is idling, the throttle flap is almost fully closed (regulated by the idling screw) so that there will be a large vacuum (negative pressure) around and under it. The vacuum in the idling passage emanating under the throttle flap will then be so great as to cause fuel to be drawn up through the main jet and through a special duct up to the idling jet. After having passed this jet, the fuel is partly mixed with the air admitted to the idling system through its special air jet. The air jet is in the form of a drilling and cannot be altered. The obtained mixture of fuel and air is now drawn through the idling duct via the air-regulating screw into the engine.

The said air-regulating screw is used to vary the throughput area for the fuel, thus regulating the mixture of fuel and air. As a certain amount of air is always passing the throttle flap, the engine fuel-air mixture when idling will be richer if the screw is screwed out and thinner if it is screwed in.

IDLING SYSTEM

1. Idling air jet
2. Main jet
3. Idling duct
4. Air-regulating screw, idling mixture
5. Throttle flap
6. Adjusting screw, idling
7. Idling fuel jet

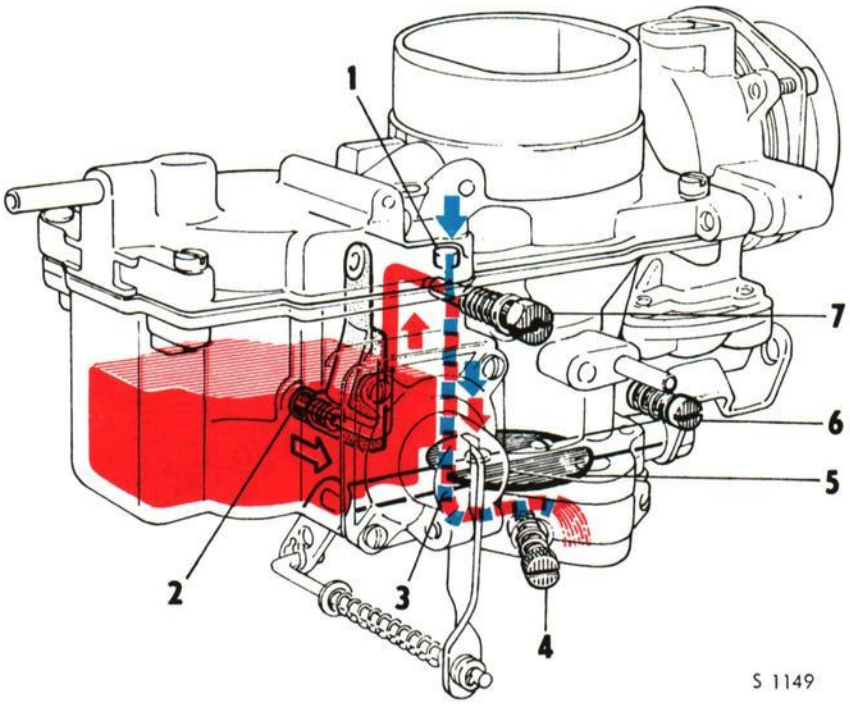

Low-speed system

To facilitate the transfer from the idling system to the main system, i.e. from idling to normal driving, the carburetor is fitted with a transitional system known as a low-speed system. This latter system communicates with the idling system and receives all its fuel-air mixture from the idling passage of the latter.

The fuel-air mixture of the low-speed system is supplied to the engine through two holes drilled in the neck of the carburetor. These holes are located immediately above the closed position of the throttle flap. As the flap opening is slowly increased from idling, the mixture of fuel and air is drawn not only from the idling system but also through one or both of these holes, depending on the position of the throttle flap. The low-speed system cannot be adjusted or altered, as its function is set exactly by the manufacturer.

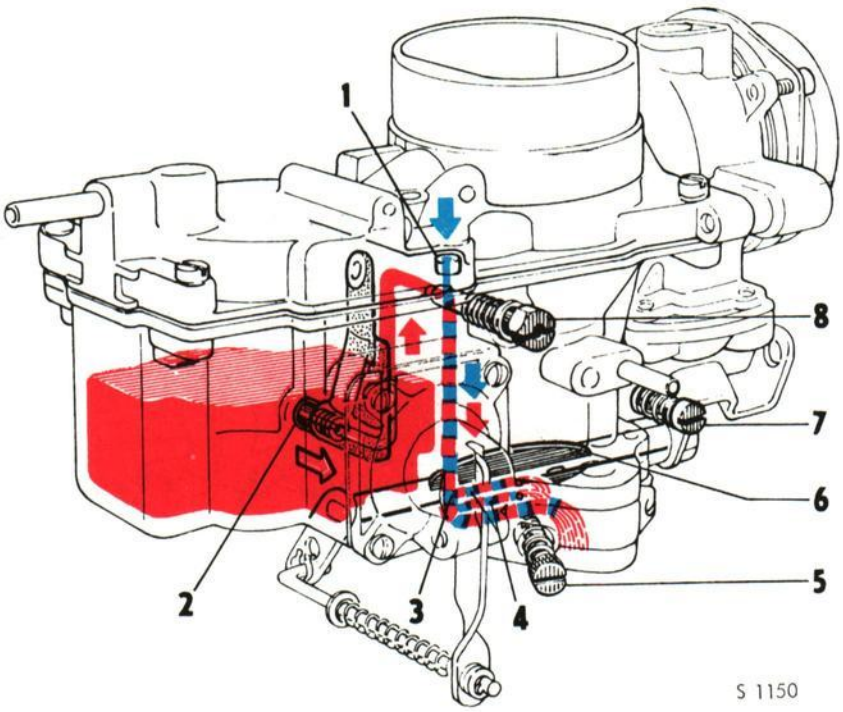

LOW-SPEED SYSTEM

1. Idling air jet
2. Main jet
3. Idling duct
4. Transition hole
5. Air-regulating screw, idling mixture
6. Throttle flap
7. Adjusting screw, idling
8. Idling fuel jet

High-speed system

At higher speeds and heavier loads, fuel is supplied to the engine through the main system of the carburetor. The fuel passes the main jet before reaching the emulsion tube pressed into the carburetor body.
As the fuel passes through the emulsion tube, an amount of air determined by the emulsion jet is mixed with it. The obtained mixture of fuel and air then flows into the neck of the carburetor through an atomizer.

HIGH-SPEED SYSTEM

1. Cover plate
2. Emulsion jet
3. Emulsion tube
4. Main jet
5. Choke tube

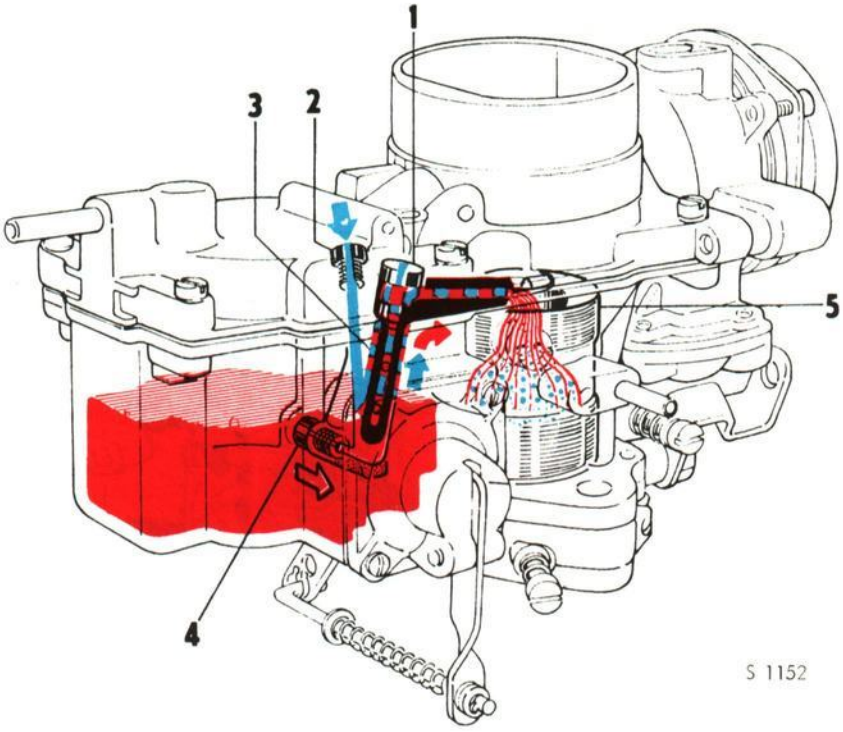

Econostat system

In order for the engine to receive enough fuel at higher full-load speeds, the carburetor is provided with a booster system known as an econostat. This works parallel with the main system and is fed directly from the float chamber. The system consists of a calibrated riser which is press-fitted in the float chamber cover. From the riser, a duct leads to the atomizer pipe which is also press-fitted in the cover. The opening of the atomizer pipe is placed in the neck of the carburetor at a point where a slight vacuum prevails at low speed and low load. Only as the speed and load increase does the vacuum at this point become high enough to cause fuel to be drawn up through the riser.

Acceleration system

If the throttle flap is opened quickly, the air-fuel mixture tends to be lean. The reason for this is that the air moves more easily than the fuel and thus reaches the engine sooner.

To compensate for this, a certain amount of fuel is therefore injected into the engine with the aid of the acceleration pump. The latter, which is located on the right-hand side of the float chamber, is a diaphragm pump which works with a spring-loaded link from the throttle flap.
The fuel to the acceleration system is sucked from the float chamber via an inlet valve inside the acceleration pump. Pump strokes cause the inlet valve to be closed and the fuel is forced past the ball in the inlet duct and out into the throat of the carburetor via acceleration jet and injector tube.
When injection ceases and the diaphragm returns to the normal position, the ball closes the outlet duct and fuel fills the acceleration pump again through the open inlet valve.
In order to prevent acceleration fuel from flowing into the engine when it expands on account of the carburetor getting warm, the acceleration pump is connected with the float chamber via a small leakage hole. This has made it necessary to increase the pump stroke.

ECONOSTAT SYSTEM

1. Riser
2. Spray pipe

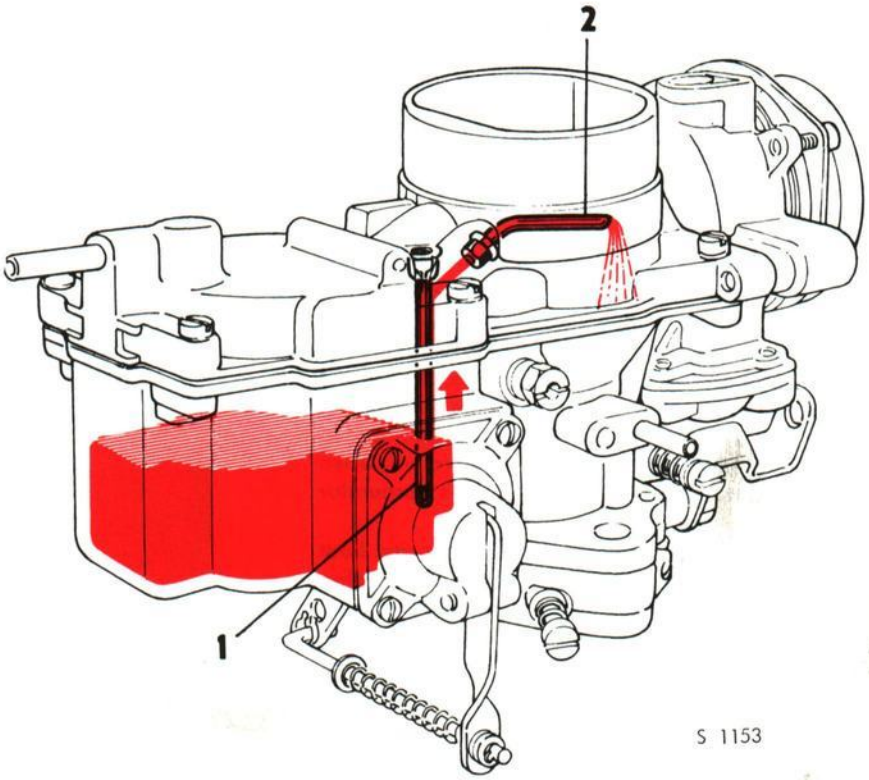

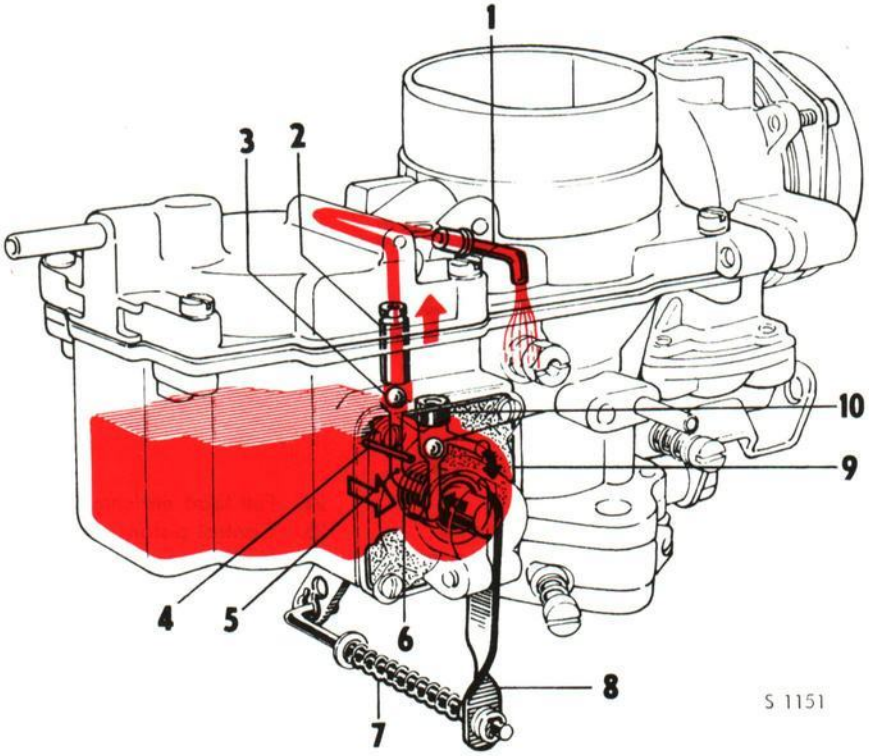

ACCELERATION SYSTEM

1. Injector tube
2. Acceleration jet
3. Ball
4. Leakage hole
5. Outlet duct
6. Spring
7. Control link
8. Lever
9. Diaphragm
10. Inlet valve

Carburetor, model 1969–1970

General

As from the 1969 model, the SAAB 95 and 96 are equipped with a FoMoCo down-draught carburetor. The fuel feeding is regulated fy fixed jets mounted in the carburetor body. Only the main jet is removable. In the body there are drilled fuel ducts, and also air ducts. In the emulsion tube is — at an early stage — a certain amount of air being mixed in with the fuel.

The carburetor has an automatic choke device with fast idle and accelerating pump. The carburetor differs from the Solex carburetor previously used, especially by it that only the main jet is removable and the fast idle device situated on the outside of the carburetor. The fast idle has four steps, out of which the fourth step is engaged at the start only. As soon as the accelerator pedal is touched upon, the said step is disengaged independently of the cooling water temperature. Then fast idle works with three steps like the Solex carburetor previously used.

Adjustment of fast idle, accelerating pump capacity, float chamber ventilation and float level is made by bending control rods and levers. These have, at the factory, been adjusted to prescribed measurements, and a readjustment at the garage is therefore — as a rule — not required.

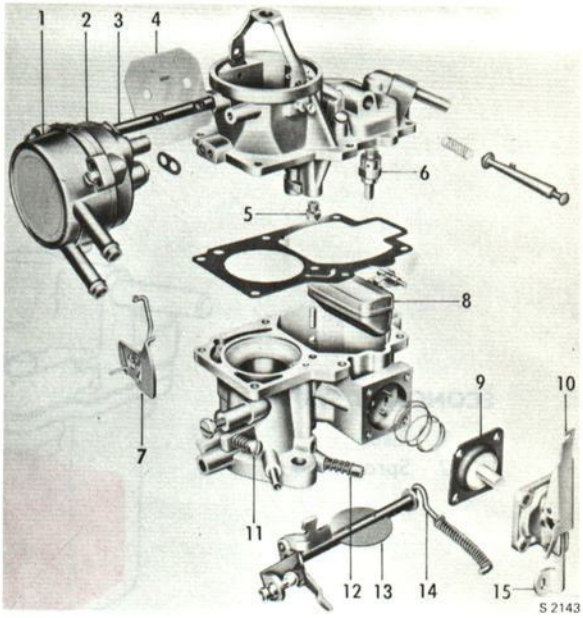

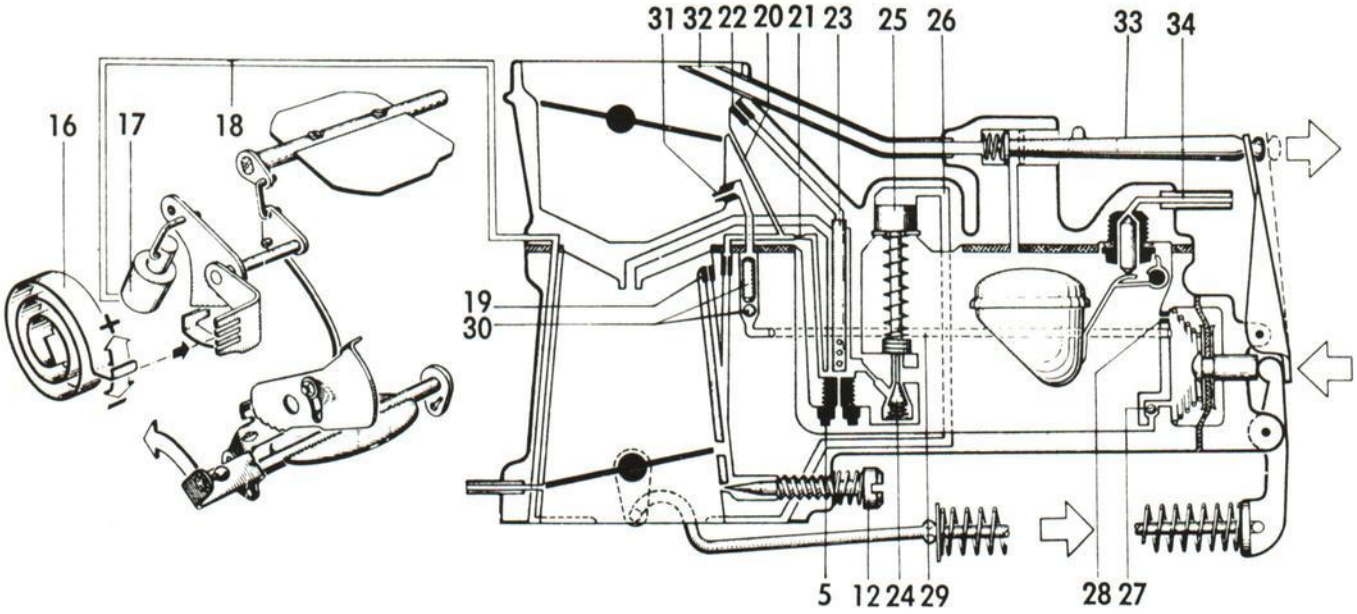

CARBURETOR, EXPLODED VIEW

S 2142

1. Thermostatic spring housing
2. Automatic choke housing
3. Choke plate shaft
4. Choke plate
5. Main jet
6. Float needle valve
7. Step cam
8. Float with shaft
9. Diaphragm piston
10. Vent actuating lever
11. Idle adjusting screw
12. Idle mixture control screw
13. Throttle valve
14. Accelerating pump rod
15. Accelerating pump lever
16. Thermostatic spring
17. Vacuum piston
18. Vacuum passage
19. Idle air jet
20. Idle air channel, mixing air
21. Idle fuel channel
22. Air correction jet
23. Mixing tube
24. Full load enrichment
25. Control piston
26. Vacuum passage
27. Inlet valve
28. Pressure-equalising hole
29. Pump discharge passage
30. Ball check valve (discharge) and weight
31. Pump jet
32. Vent tube
33. Vent push rod
34. Fuel supply tube

Float

The fuel level in the float chamber is governed by the float. When the fuel flows into the chamber, the float is lifted and presses the valve against the seat. Once the intended level is obtained, the fuel supply is cut off. When the level sinks, the course is repeated.

To ensure a stable float level, the needle valve is equipped with a spring-loaded ball.

The carburetor is equipped with a valve, which governs the ventilation of the float chamber. When the throttle valve is closed, the ventilation is directed outwards, when open inwards i.e. to the carburetor neck.

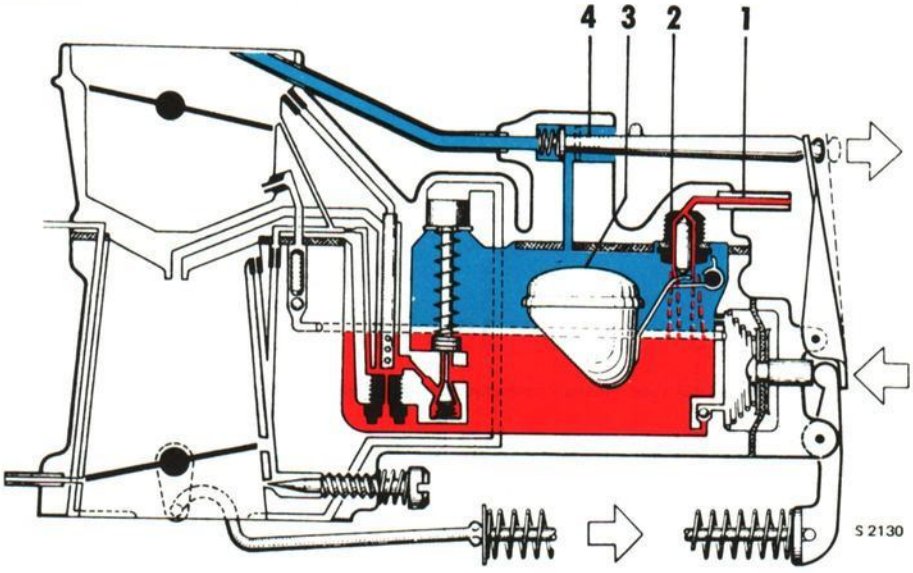

FLOAT SYSTEM

1. Connection for fuel supply hose
2. Float needle valve
3. Float
4. Vent push rod

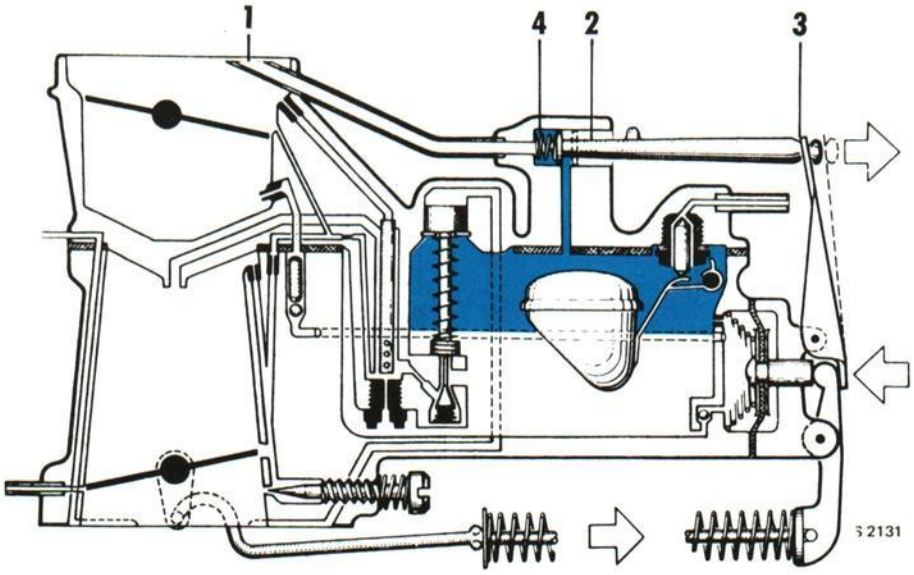

FLOAT CHAMBER VENTILATION

1. Float chamber ventilation
2. Vent push rod
3. Lever
4. Spring

Starting automatics

To facilitate cold-starting, the carburetor is equipped with a choke plate in the upper part of the carburetor neck. When the plate is closed, the vacuum under it increases and so does the fuel supply.

The choke plate is regulated automatically by means of a thermostatic spring the function of which is directly dependent on the prevailing coolant temperature. The choke plate is closed as long as the engine is cold, b· as the temperature of the cooling water rises the choke plate gradually opens and is wide open at a temperature of approx. 140°F (60°C).

The starting automatics feature a vacuum-regulated piston which, via a lever, open the choke plate slightly as soon as the engine has started, thus providing sufficient engine air and preventing "suffocation".

Furtermore, there is a mechanical device which forces the choke plate to open, when the vacuum falls due to remarkable accelaration.

The starting automatics include a step cam which serves to increase the idling speed when starting from cold. In order to engage the fast idle device when starting from cold, the accelerator pedal must be pressed right down and then released before an attempt to start is made. This is necessary in order to release the step cam thus enabling the latter to take up the position decided by the thermostatic spring.

The position of the throttle valve is then not governed by the idling screw any longer but by the position of the stop on the step cam.

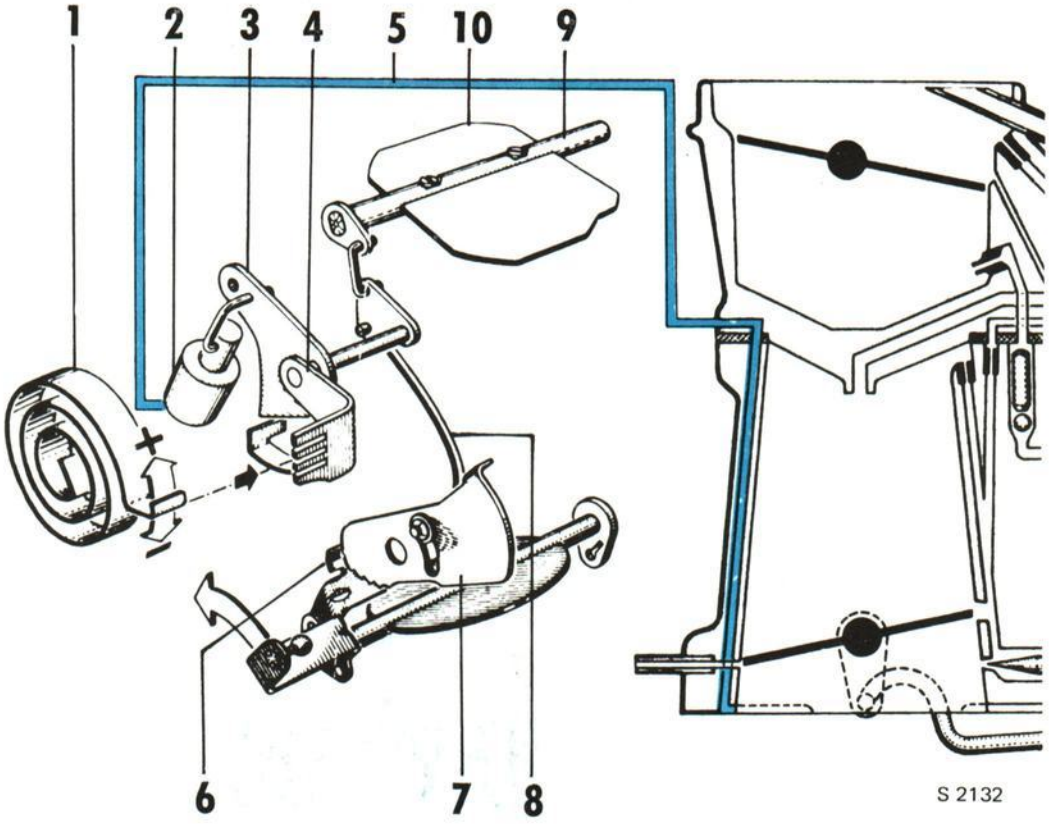

STARTING AUTOMATICS

1. Thermostatic spring
2. Vacuum piston
3. Lever
4. Thermostatic spring lever
5. Vacuum passage
6. Fast idle stop dog
7. Step cam
8. Link rod
9. Choke plate shaft
10. Choke plate

Idling system

When the engine is idling, the throttle valve is almost fully closed (regulated by the idling screw) so that there will be a large vacuum under the throttle valve.

The vacuum in the idle air channel emanating under the throttle valve, will then be so great as to cause fuel to be drawn up through the main jet and through a special idle fuel channel up to the idle fuel jet, consisting of an accurately calibrated constriction of the channel. The fuel is then partly mixed with the air admitted through a special air channel. The fuel-air mixture then passes another constriction, and receives more air from a pressure-equalising hole, which is placed further down in the neck of the carburetor. The purpose of this is to get the correct relationship between fuel and air, before the mixture — via the mixture control screw — is suctioned into the engine.

In order to make the transition from idling system to main system more uniform, there is — in the carburetor neck, just above the idle mixture control screw — a slot, which becomes visible when the throttle valve is opened. This system receives its fuel from the idling system.

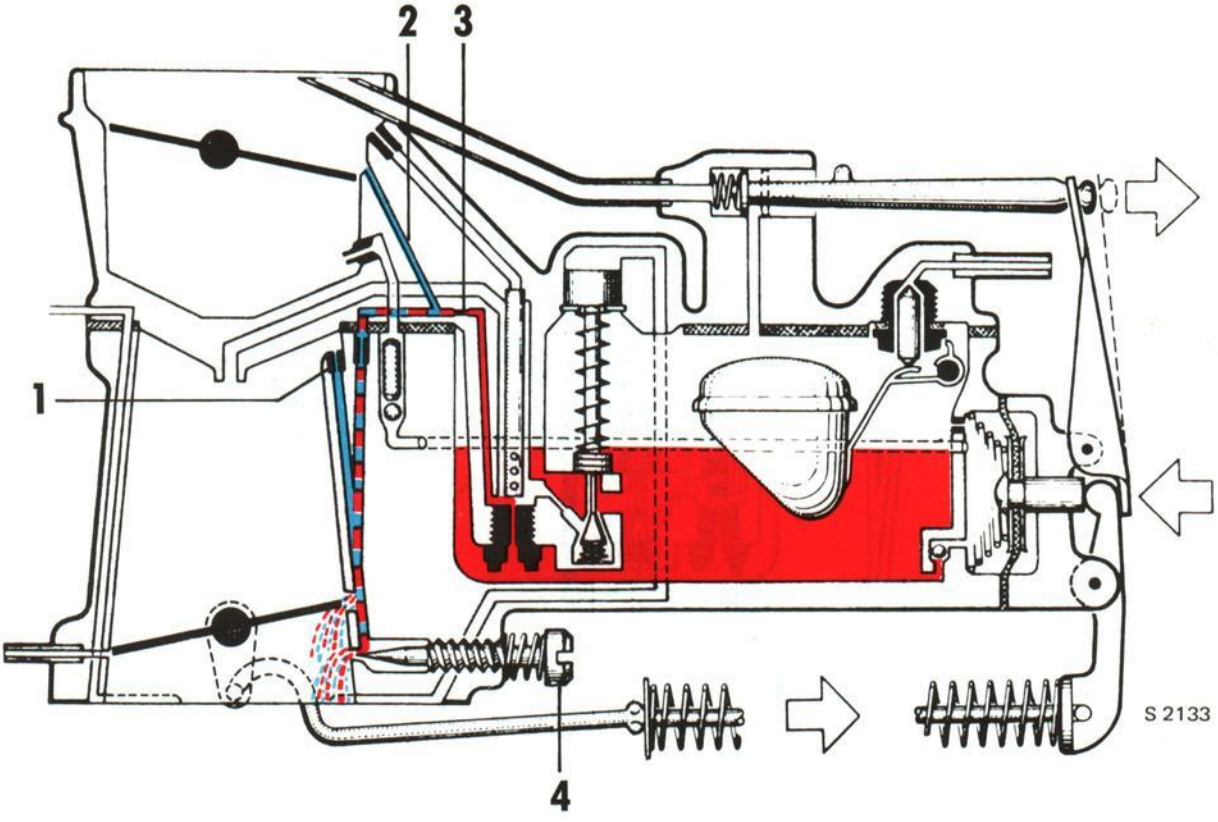

IDLING SYSTEM

1. Idle air jet
2. Idle air channel, mixing air
3. Idle fuel channel
4. Idle mixture control screw

Main system

At higher speeds and heavier loads, fuel is supplied to the engine through the main system of the carburetor. The fuel passes through the main jet before reaching the mixing tube pressed into the carburetor body. As the fuel passes by the mixing tube, an amount of air determined by the mixing tube is mixed with it. The obtained mixture of fuel and air then flows into the neck of the carburetor through an spray pipe.

In order for the engine to receive enough fuel at higher full-load speeds, the carburetor is provided with a vacuum regulated full-load-enrichment system. The system consists of a piston, which via a channel communicates with the carburetor neck. The piston is actuated by the vacuum prevailing in the neck. When the engine speed is low and the throttle valve closed, the vacuum is large and the piston is lifted, and a spring-loaded valve — situated close by the main jet — kept shut. When the throttle valve is wide open, the vacuum diminishes and the piston is depressed by a spring, which opens the valve. The fuel then flows direct into the main system through the main jet.

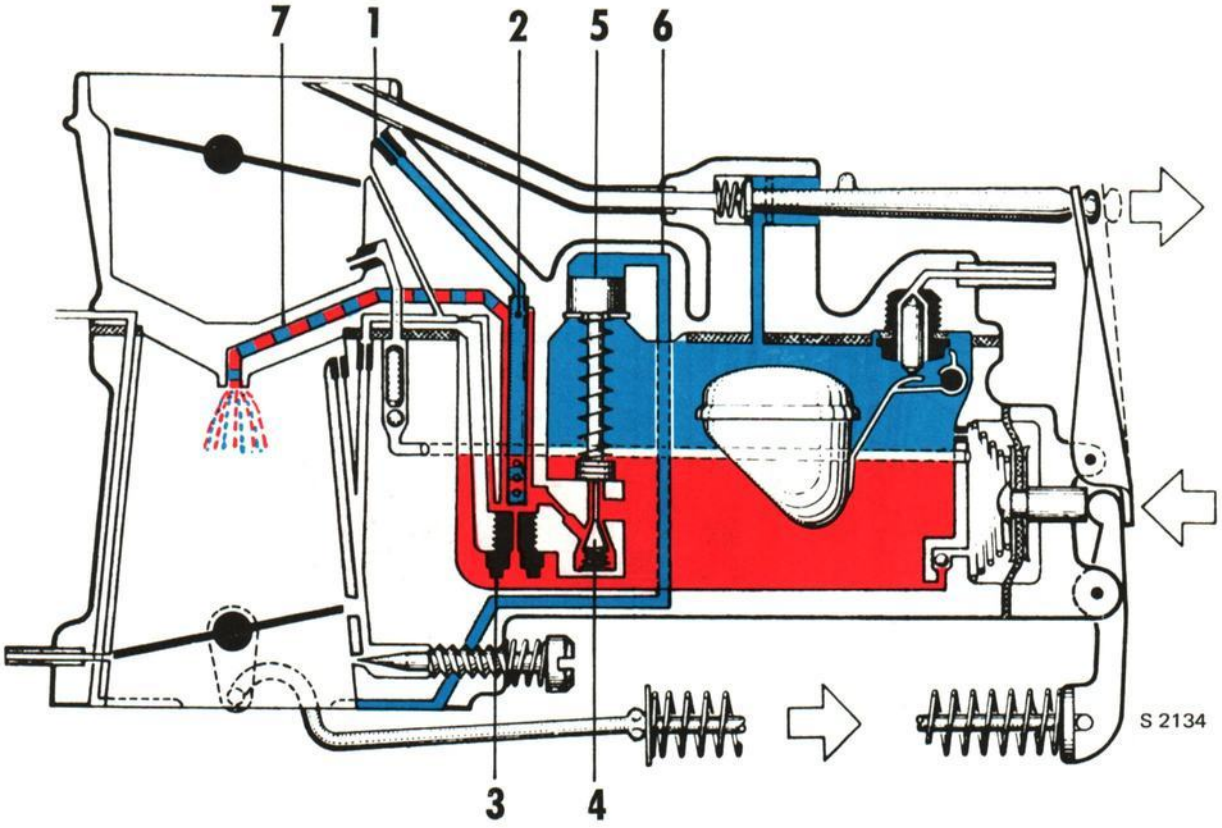

MAIN SYSTEM

1. Air correction jet
2. Mixing tube
3. Main jet
4. Full load enrichment
5. Control piston, full load enrichment
6. Vacuum passage
7. Spray pipe

Acceleration system

If the throttle valve opens quickly, the air-fuel mixture tends to be lean. The reason for this is, among other things, that the air moves more easily than the fuel and thus reaches the engine sooner.

To compensate the "leanness", a certain amount of fuel is therefore injected into the engine with the aid of the accelerating pump. The latter is a diaphragm pump which works with a spring-loaded link from the throttle valve. The fuel to the acceleration system is sucked from the float chamber via an inlet valve inside the accelerating pump. Pump strokes cause the inlet valve to close and the fuel is forced past the ball in the outlet duct and out into the carburetor neck via the acceleration jet.

When injection ceases and the diaphragm returns to the normal position, the ball closes the outlet duct and fuel fills the accelerating pump again through the open inlet valve.

In the outlet duct of the acceleration system, there is — above the ball — a weight which serves as non-return valve. The fuel supply to the acceleration system is regulated by it that a certain pressure is required to lift the ball and the weight. In this way fuel injection is prevented, when the valve opens slowly.

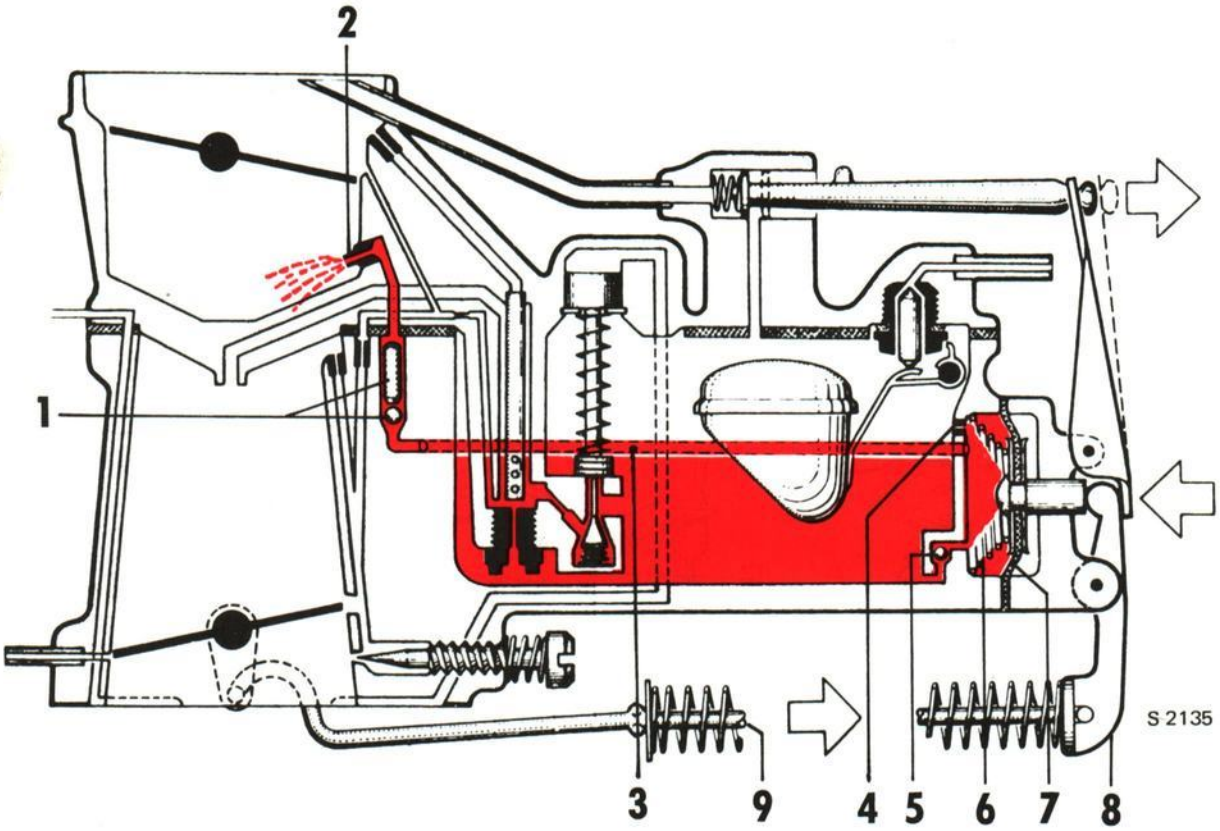

ACCELERATION SYSTEM

1. Ball check valve (discharge) and weight
2. Acceleration jet
3. Fuel channel
4. Pressure-equalising hole
5. Ball check valve (inlet)
6. Spring
7. Diaphragm
8. Lever
9. Accelerating pump rod

Carburetor as from model 1971

In order to satisfy the demands on cleaning of the exhaust gases, the V4 engine as from model 1971 is equipped with an emission carburetor. This carburetor differs from the version in earlier models in that it is made with narrower, tolerances and each carburetor has been subjected to a flow test. As from chassis No. 95 95060 and 96 600233 respectively, the float chamber ventilation has been modified so that it now takes place via a nipple on the float chamber cover. A hose attached to this nipple opens out into the left wheel house.
The preceding functional description is valid also for this carburetor.

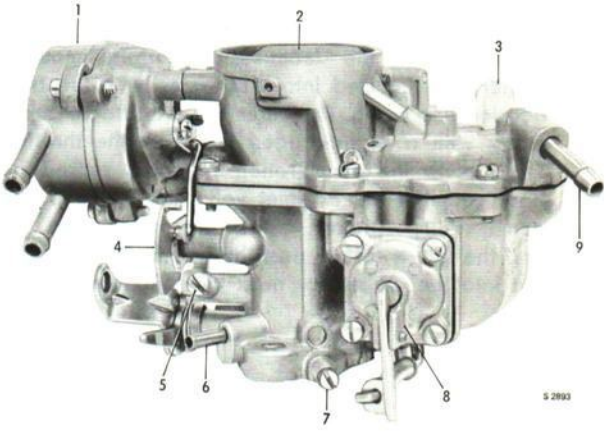

CARBURETOR AS FROM MODEL 1971

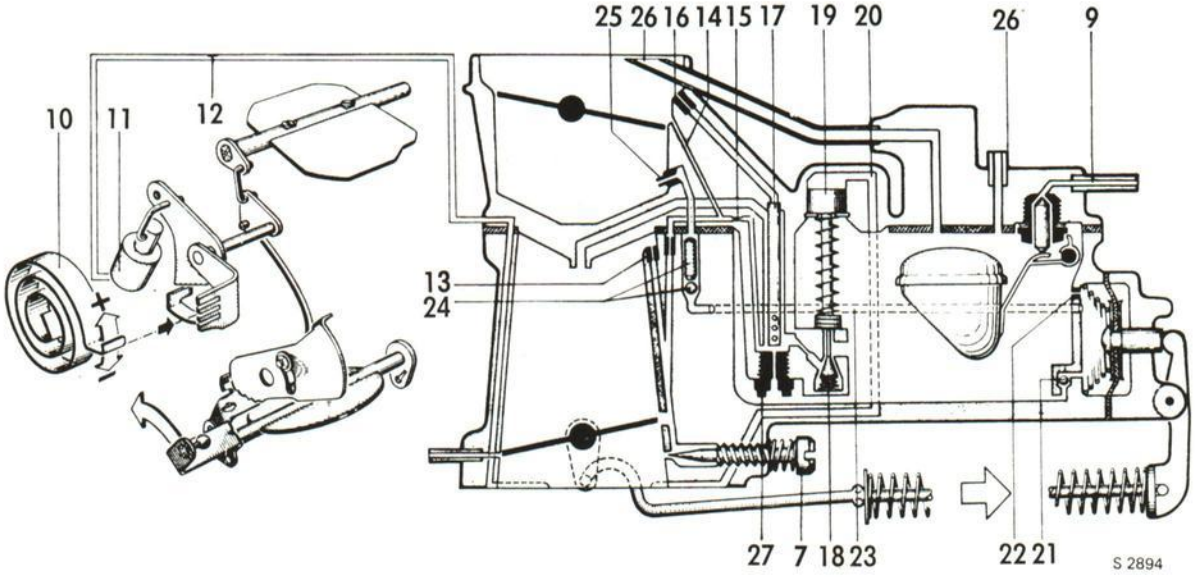

CARBURETOR AS FROM MODEL 1971, EXPLODED VIEW

1. Automatic choke housing
2. Choke plate
3. Connection for float chamber vent
4. Step cam
5. Idle adjusting screw
6. Vacuum nipple
7. Idle mixture control screw
8. Accelerating pump
9. Fuel supply tube
10. Thermostatic spring
11. Vacuum piston
12. Vacuum passage
13. Idle air jet
14. Idle air channel
15. Idle fuel channel
16. Air correction jet
17. Mixing tube
18. Full load enrichment
19. Control piston
20. Vacuum passage
21. Ball check valve (inlet)
22. Vent
23. Pump discharge passage
24. Ball check valve (discharge) and weight
25. Pump jet
26. Vent tube, float chamber
27. Main jet

Air filter

The air filter is mounted on top of the engine and serves both to clean the induction air and as an induction silencer.

The air-filter cartridge is made of a special grade of paper which may not be washed or moistened. The only service measures are blowing through with compressed air or replacement of the cartridge.

To preheat the induction air in cold weather, the inlet of the downward-pointing air-filter snorkel can be placed behind a special preheater plate, screwed to the exhaust flange of the lefthand cylinder head. In warmer weather, when preheating is no longer necessary, the upper part of the air filter is loosened and turned so that the snorkel inlet comes in front of the preheater plate.

Cooling system

The cooling system is of positive-pressure type with a circulation pump. To ensure rapid heating up and a regular working temperature, the cooling system is equipped with a thermostat. This thermostat is placed in the front part of the induction pipe. It opens when the engine reaches normal working temperature.

The vater pump is located on the righthand side of the engine and is driven by the balance shaft belt pulley via the fan belt.

When the pump is working, the water is forced through the water distribution pipe to the rear part of the cylinder block.

After having passed the engine, the water flows up by the side of the thermostat and through a by-pass line to the suction side of the pump. The cooling jacket of the automatic choke device is coupled parallel with the by-pass line. The heat exchanger is also coupled parallel with the by-pass line.

The procedure described above occurs when the engine temperature is low and the thermostat is closed. When the thermostat is open, the water will also circulate through the radiator.

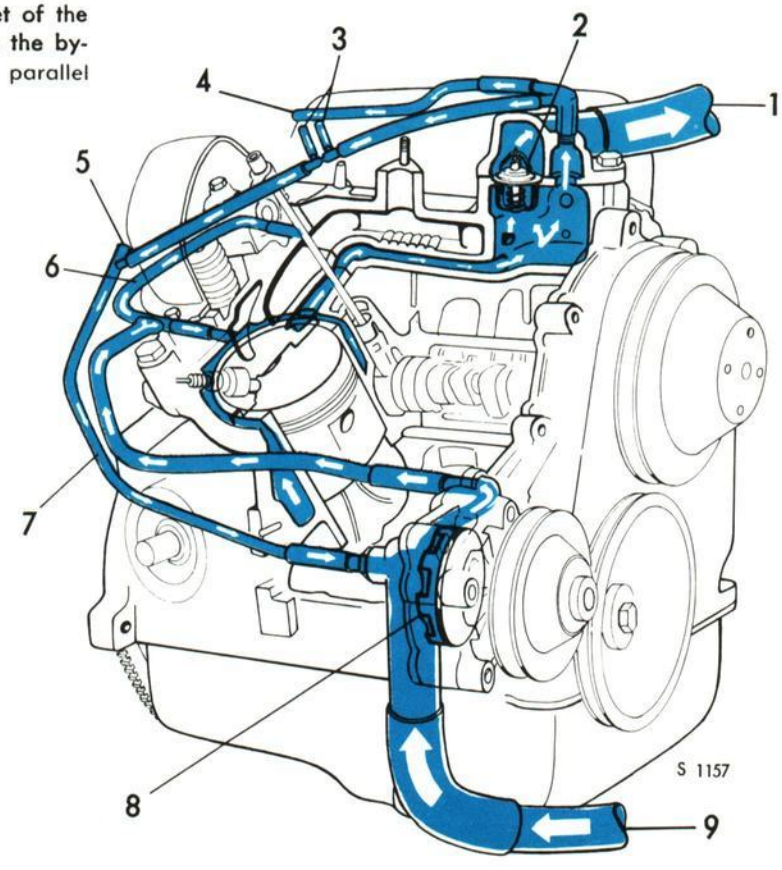

COOLING WATER CIRCULATION

1. Upper radiator connection, outlet
2. Thermostat
3. Automatic choke connection
4. Heat exchanger connection, inlet
5. Heat exchanger connection, outlet
6. Water distribution pipe
7. By-pass line
8. Water pump
9. Lower radiator connection, inlet

CRANKCASE VENTILATION

Engines up to and includ. engine No. 16.100 are equipped with semi-enclosed crankcase ventilation. Engines No. 16.101 and up have a totally enclosed crankcase ventilation. The principle of the said systems is described below.

Semi-enclosed crankcase ventilation

The air is admitted through the oil filler cap on the righthand valve cover. It passes through the crankcase, and via a hose is led to the air filter and on to the carburetor without passing the air filter insert.

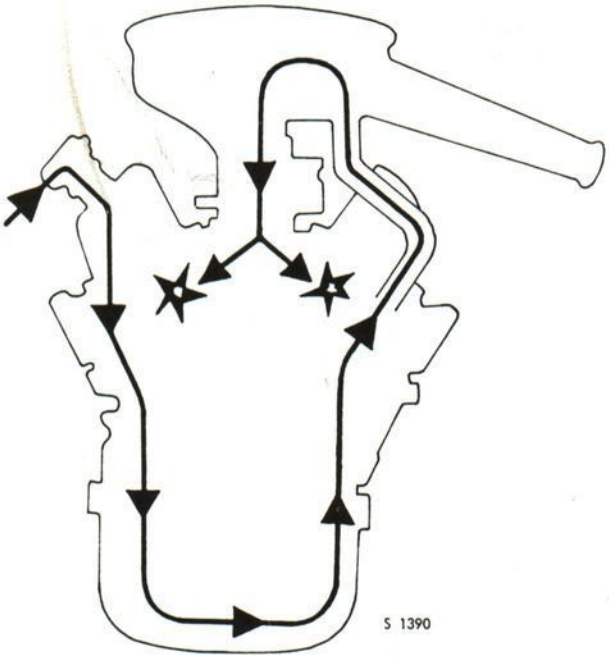

SEMI-ENCLOSED CRANKCASE VENTILATION

Totally enclosed crankcase ventilation

The air is admitted through the air filter, where it passes the filter insert, and via a flame guard and a hose is led into the righthand valve cover. Through the crankcase, the air is then led into the lefthand valve cover and on via a hose to an intermediate flange beneath the carburetor. In the intermediate flange there is a valve regulating the flow of air through the crankcase.

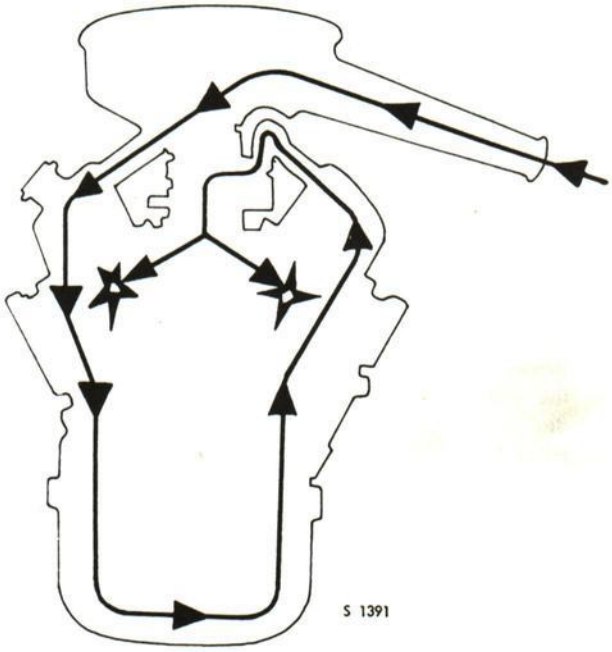

TOTALLY ENCLOSED CRANKCASE VENTILATION

REMOVAL AND INSTALLATION

Removal of engine

If the entire power unit is to be lifted out, see Chapter 4. To lift out the engine only, proceed as follows:

1. Disconnect the battery earth cable from the battery.
2. Remove the hood by opening it wide and then removing the locking springs for the hood hinges. Disconnect the hose for the windshield washer. Now grip the hinge stay, bending it slightly inwards to release the pin on one side. An assistant will hold the hood on the other side and help to lift it off.

REMOVAL OF FASTENING SCREWS, FRONT PLATE

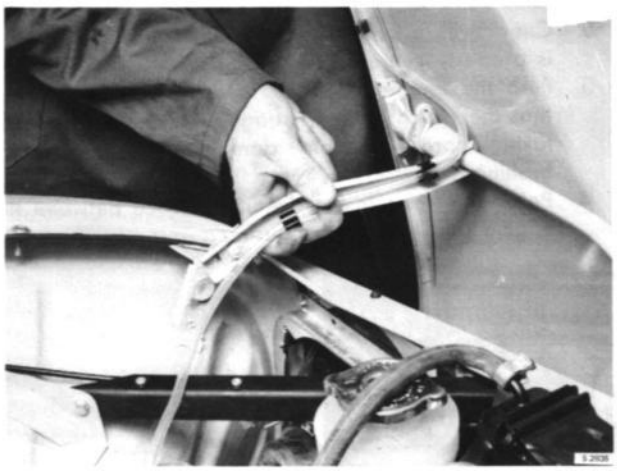

REMOVAL OF ENGINE HOOD

3. Drain off the cooling water through the radiator draining tap. To ensure that draining will be as effective as possible, bleed the system through the bleed nipple on the heat exchanger.

Up to and inlc. model 1968:

4. Disconnect the headlamp and direction indicator cables.
5. Back off the four screws for the front panel and detach the two radiator supports from the car body. Detach the clamping straps from the radiator and remove the hood lock and control wire.

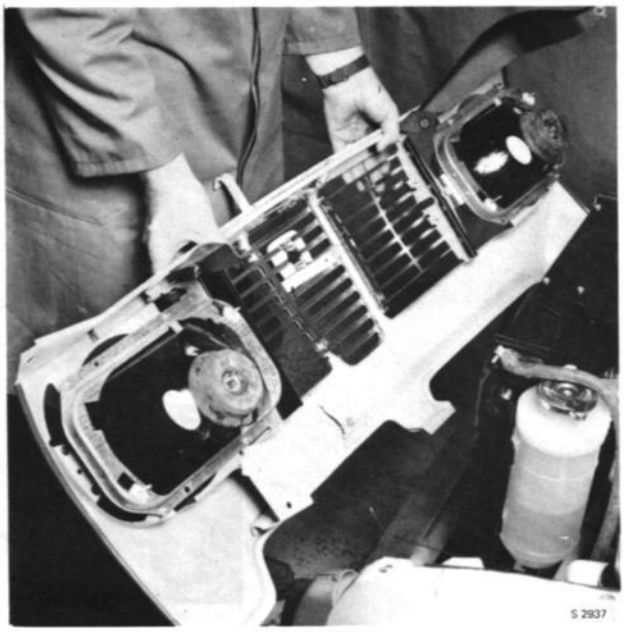

REMOVAL OF FRONT PLATE

Model: 1969—1970

4. Remove the headlamp decor frames. Disconnect the headlamp cables.
5. Back off the four screws for the front panel and detach the two radiator supports from the car body. Detach the clamping straps from the radiator and remove the control wire.

As from model 1971:
(With headlamp cleaner)

4. Remove the headlamp decor frames. Disconnect the hoses for the headlamp washers from the respective nozzles. Disconnect the headlamp cables.

5a. Back off the four screws for the front panel and detach the two radiator supports from the car body. Detach the clamping straps from the radiator and remove the control wire.

b. Slacken the lower screw for the expansion vessel bracket slightly. Bend the bracket so that the headlamp cleaner motor goes clear.

c. Detach the cables from the headlamp cleaner motor (note the connection positions of the cables).

6. Remove the front panel, taking great care to avoid damaging the paintwork.
7. Disconnect the upper coolant hose from the engine and the lower coolant hose from the radiator.
8. Back off and remove the two lower radiator retaining screws and remove the radiator.
9. Disconnect all hoses and cables from the engine. Note the positions of the cable connections on the alternator.
10. Remove the air filter. Place a plastic cover No. 783729 over the carburetor air inlet to prevent the entry of foreign matter into the engine.
11. Disconnect the throttle control and the engine side support, as well as the preheater casing.
12. Back off and remove the flange nuts for the exhaust pipes at the cylinder heads. Remove the lower clamps for the exhaust pipes at the engine cushions.
13. Remove the rubber cushions for the middle exhaust pipe from under the floor.
14. Remove the spacers at the cylinder heads and lower the muffler as far as possible.
15. Remove the two front engine cushions, working from above.
16. Remove the alternator and its bracket.
17. Disconnect the water-distribution pipe from the cylinder block and water pump.
18. Attach the lifting hook 78 62 02 — see fig.
19. Lift the unit about 2 in. (50 mm) to provide a free forward passage for the engine oil pan.
20. Place a suitable wooden block under the gear box as a trestle.
21. Disconnect the starter motor.
22. Remove the protective plate in front of the flywheel.
23. Back off and remove the screws in the dividing surface between the engine and the clutch housing.
24. Pull the engine carefully from the gearbox until the clutch shaft slides out of the clutch center.
25. Lift out the engine.

INSTALLATION

1. Lift the engine into the engine compartment for reassembling together with the gearbox. Use lifting hook 78 62 02.
2. Check with a centering arbor that the disc assembly is properly centered in the clutch.
3. Push the engine carefully towards the gearbox so that the clutch center engages the clutch shaft and taking care to avoid damaging the crankshaft bushing.
4. Refit the screws in the dividing surface between the engine and the clutch housing.

REMOVAL AND INSTALLATION OF ENGINE WITH LIFTING HOOK 786202

5. Refit the protective plate for the flywheel. Apply Loctite to lock the screws.
6. Reconnect the starter motor.
7. Reconnect the water-distribution pipe.
8. Refit the alternator and the fan belt.
9. Lift the unit slightly and remove the wooden block from under the gear box.
10. Lower the engine into position and tighten the front engine cushions.
11. Reconnect the exhaust pipes to the cylinder heads. Fit new gaskets.
12. Refit the clamps for the exhaust pipes and the suspension under the car.
13. Reconnect the throttle control.
14. Reconnect all hose and cable connections to the engine, starter motor and alternator.

CAUTION

Do not confuse the cables to the alternator, as this may result in ruining the latter.

15. Refit the air filter.
16. Refit the radiator. Connect the lower coolant hose before tightening the two lower retaining screws.
17. Connect the upper coolant hose.
18. Refit the front panel and the radiator clamping straps.
19. Refit the radiator stays and the hood lock.
20. Reconnect the headlamp and direction indicator cables.
21. Refill the cooling system and bleed the system.
22. Check the engine oil level. Top up it necessary.
23. Reconnect the earth cable to the battery and refit
24. Check the headlight alignment. Adjust if necessary.
25. Teststart engine. Note the oil pressure and coolant temperature. Check the coolant level when the engine has been run up to the warm condition.
26. Take the car out for a test run.

DIVISION OF REMOVED POWER UNIT
Disassembly

See Chapter 4

Reassembly

See Chapter 4

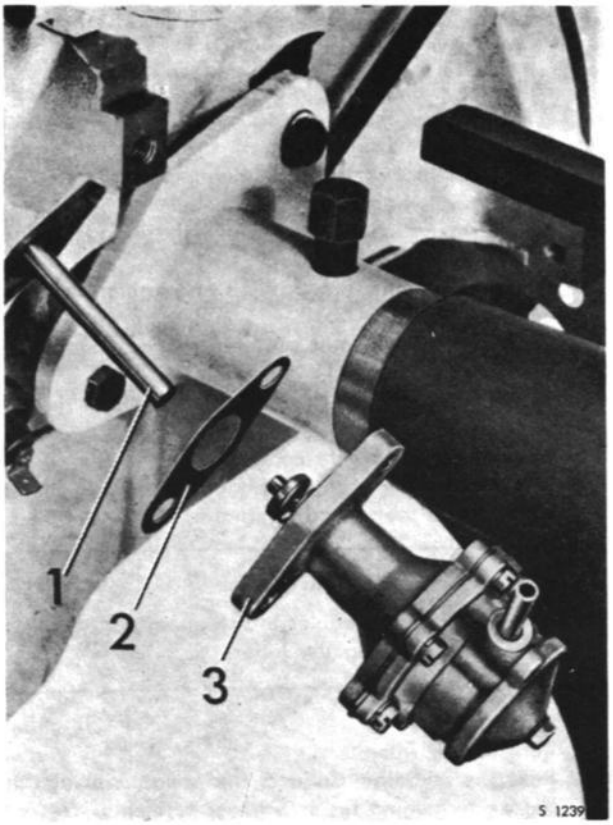

REMOVAL OF FUEL PUMP

1. Pump push rod
2. Gasket
3. Fuel pump

DISASSEMBLY AND REASSEMBLY
Disassembly of engine

1. Install the engine on a work stand.
2. Drain the engine oil.
3. Remove the distributor cap and ignition cables.
4. Remove the distributor vacuum line and the fuel inlet line by applying pressure with a screwdriver behind the washers at the flexible connections.
5. Remove the carburetor.
6. Remove the distributor clamping screw and clamp and then remove the distributor.
7. Remove the fuel pump, pump push rod and gasket. See fig.

> NOTE
>
> Mark the end of the pump push rod which rests against the camshaft as a guide for reassembly.

8. Take out the spark plugs.
9. Remove the oil pressure gauge.
10. Remove the valve covers. Release the rocker-arm assembly by slackening the two bolts alternately and remove the oil return plates. See fig.

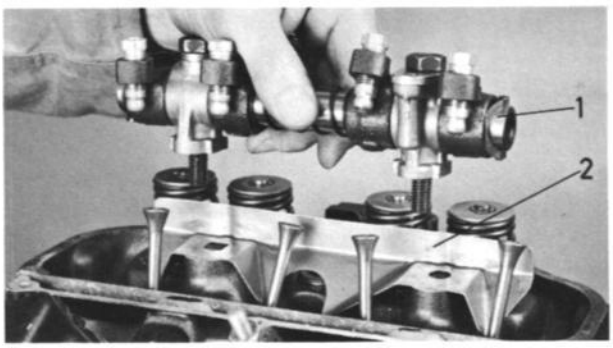

REMOVAL OF ROCKER ASSEMBLY

1. Rocker shaft with rocker arms
2. Oil return plate

11. Remove the push rods and keep them in the correct order.
12. Remove the thermostat housing cap, the thermostat and the gasket. See fig.

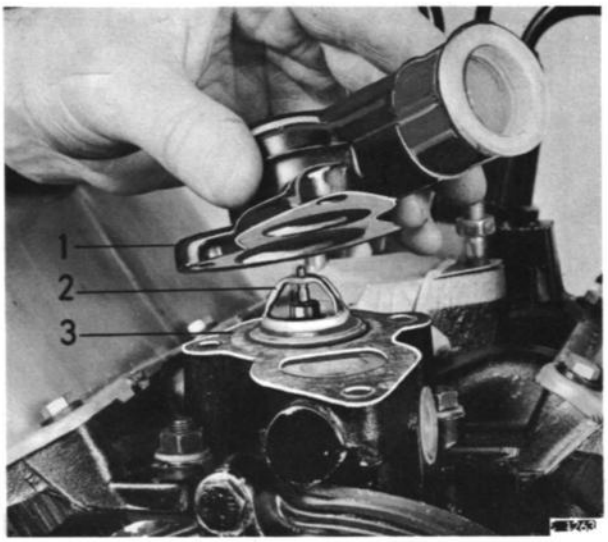

REMOVAL OF THERMOSTAT

1. Thermostat housing cover
2. Thermostat
3. Gasket

13. Remove the induction manifold retaining bolts and nuts. It may be necessary to tap the underside of the front and rear ends with a plastic or leather mallet in order to break the seals. Do not prize with a screwdriver between the manifold and the cylinder block or between the manifold and the cylinder head. Remove the induction manifold.

REMOVAL OF TAPPETS

14. Remove the bracket for the side stay.
15. Back off and remove the cylinder head bolts. Lift the heads off the cylinder block. Inspect the cylinder head gaskets for any signs of leakage.
16. Remove the tappets with the aid of a bent wire and keep them in the correct order.
17. Remove the oil pan retaining screws, the oil pan and the gaskets.
18. Remove the balance shaft pulley.
19. Back off and remove the transmission cover retaining bolts.
20. Tap the rear of the water pump with a plastic or leather mallet to loosen the transmission cover from the intermediate plate.
21. Disconnect the water pump from the transmission cover.

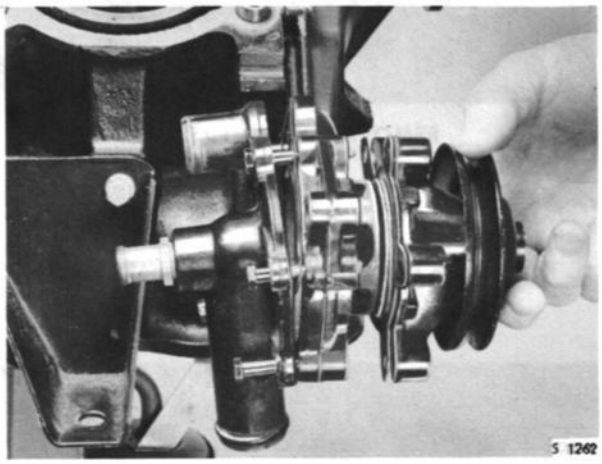

REMOVAL OF WATER PUMP

22. Take the oil seal for the balance shaft out of the transmission cover with tool 786214. See fig.

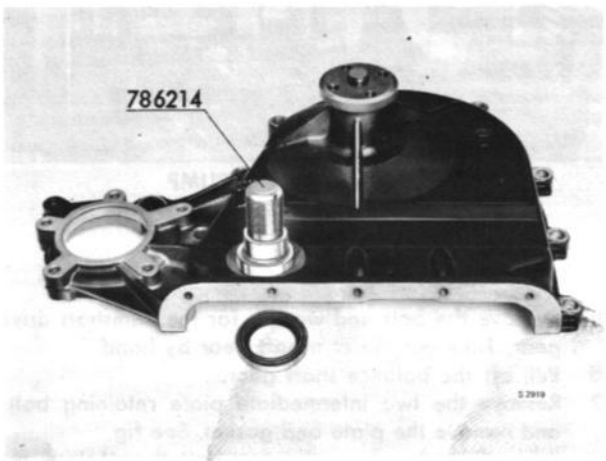

REMOVAL OF TRANSMISSION COVER OIL SEAL

23. Remove the oil filter with tool 786201. See fig.

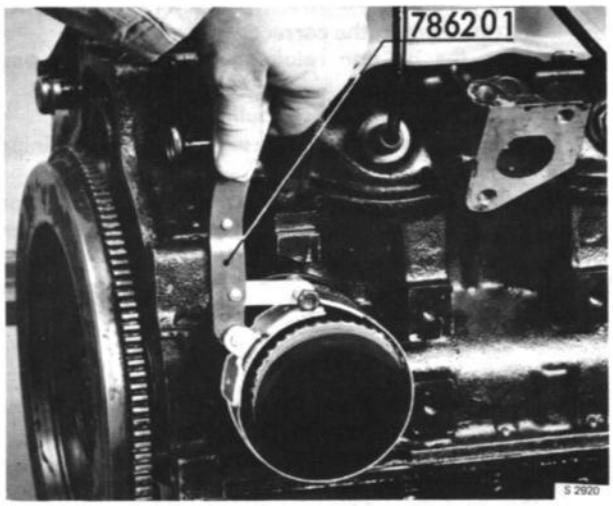

REMOVAL OF OIL FILTER

24. Remove the oil pump and its drive shaft. See fig.

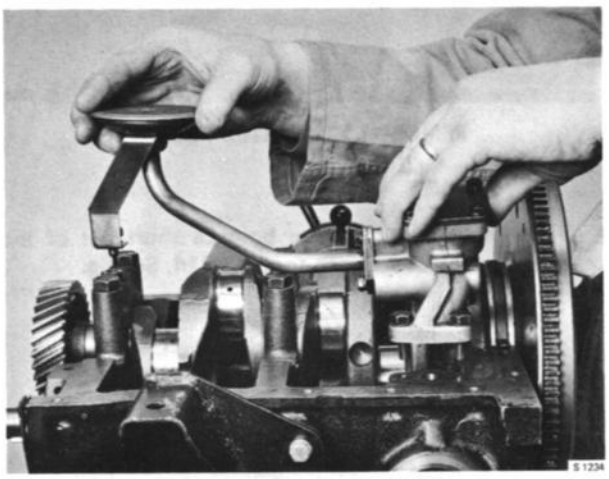

REMOVAL OF OIL PUMP

25. Remove the bolt and washer for the camshaft drive gear. Take out the camshaft gear by hand.
26. Pull off the balance shaft gear.
27. Remove the two intermediate plate retaining bolts and remove the plate and gasket. See fig.
28. Back off and remove the camshaft thrust plate, remove the key and the spacer and pull the camshaft carefully out of the bearings to the front.

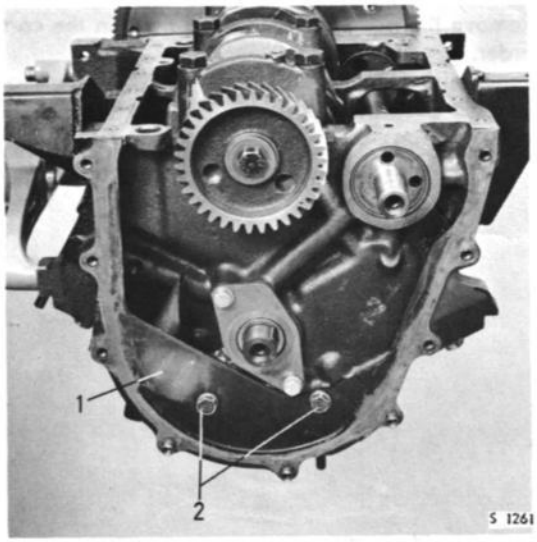

ENGINE BLOCK, FRONT VIEW

1. Intermediate plate
2. Retaining bolts, intermediate plate

> NOTE
>
> As the bearings have different diameters, the camshaft can only be removed to the front, even if the rear cover plate has been taken off.

29. Remove any redges or carbon deposits from the upper end of the cylinder bores.
30. Make sure that all connecting rods and caps are marked so that they can be reinstalled in their original positions. Remove the nuts and caps, and push the pistons with connecting rods out of the cylinder bores. Protect the crankshaft bearing necks from contact with the connecting rod cap screws.

> NOTE
>
> In changing pistons, the connecting rod and connecting rod cap must be marked as indicated in the figure.

MARKING OF CONNECTING RODS

NOTE

Piston and connecting rod with piston pin form an integral unit and must not be disassembled further.

31. Remove the bearing inserts and caps from the connecting rods and mark them so that they can be reinstalled in their original positions. Install the caps loosely on the connecting rods from which they were removed.
32. Remove the crankshaft gear retaining bolt and remove the gear with tool 786218.

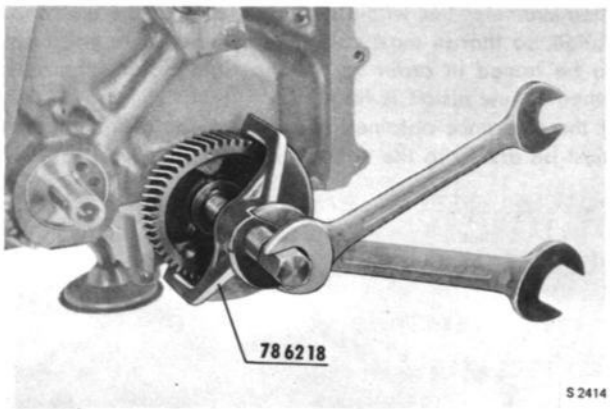

REMOVAL OF CRANKSHAFT GEAR

33. Remove the flywheel.

NOTE

Before removing the flywheel, this item and the crankshaft flange must be marked up in relation to each other.

34. Using a plastic or leather mallet, drive the balance shaft rearwards until the sealing washer is out. Carefully remove the balance shaft from the rear of the block. See fig.

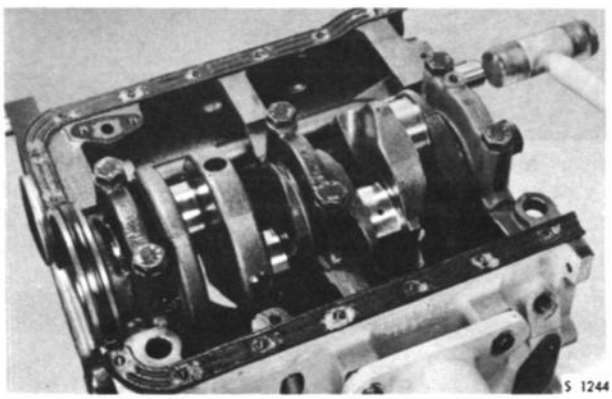

REMOVAL OF BALANCE SHAFT

35. Remove the bolts from the main bearing caps. Remove the main bearing caps together with the bearing inserts.
36. Lift the crankshaft carefully out of the block.
37. Slide the oil seal off the crankshaft.
38. Remove the main bearing inserts and caps from the block and keep them in the correct order.

Reassembly

1. Place all bearing inserts in position after having coated them lightly with engine oil.

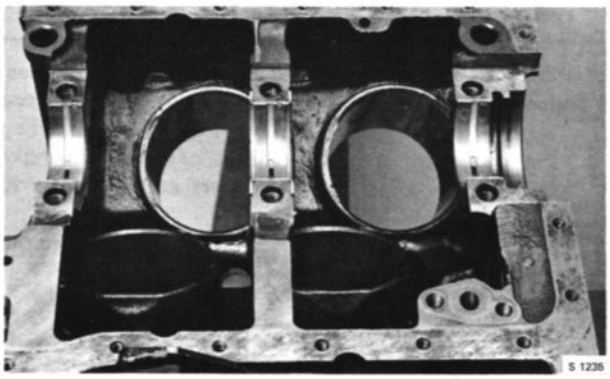

INSTALLATION OF MAIN BEARINGS

2. Place the crankshaft carefully in the bearing seats. See fig.

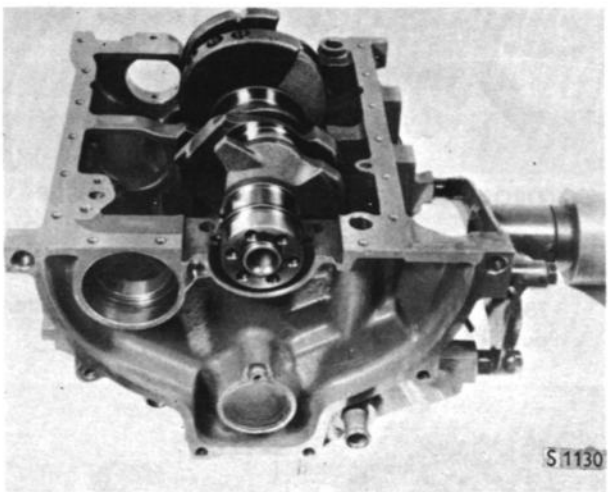

INSTALLATION OF CRANKSHAFT

3. Install the main bearing caps with inserted and oiled bearing inserts. Apply a thin coat of sealing compound to the rear part of the contact surface of the rear bearing cap.

NOTE

The arrows on the center and front main bearing caps must point to the front.

4. Tighten the front and rear bearing caps to a torque of 72 ft-lb (10.0 kpm). Finger-tighten the bolts for the center bearing cap.

NOTE

Do not confuse the screws for cylinder heads and main bearings. These have the same diameter, but the screws for the main bearings are approx. 0.4 in. (10 mm) longer than those for the cylinder heads.
As from engine No. 74900, the cylinder head screws have been lengthened approx. 0.4 in (10 mm) and consequently there is no danger of confusion.

5. Press the crankshaft forwards and pry the axial (center) bearing cap to the rear. Then, tighten the cap bolts to a torque of 72 ft-lb (10 kpm) while holding the crankshaft forward. (This is necessary to make both halves of the bearing insert equally ready to bear axially.) See fig.

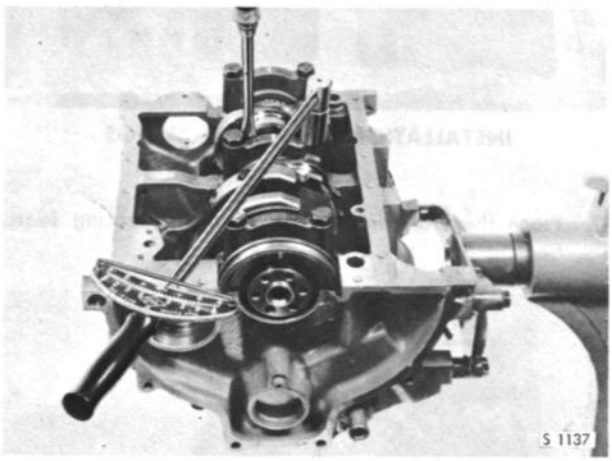

TORQUING THE CENTER MAIN BEARING CAP

6. Lubricate the inner diameter of the new crankshaft seal with engine oil and push the seal onto tool 786217. Drive it into the main bearing until it bottoms out. See fig.

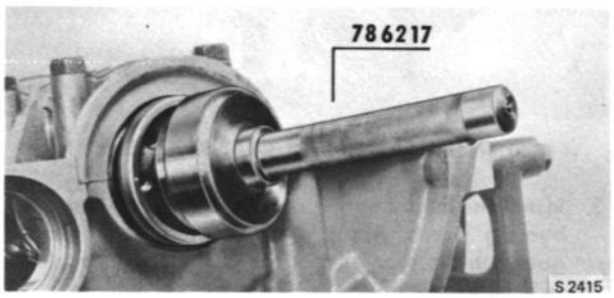

REAR CRANKSHAFT SEAL ASSEMBLY

FITTING OF PISTONS IN CYLINDER BORES

For fitting of pistons in cylinder bores, a feeler gauge with a width of 1/2 in. and a thickness of 0.0012—0.0020 in. (0.03—0.06 mm) is used. In measuring, the piston, without rings, should be placed in the bore in the way in which it will work subsequently, i. e. with its front marking pointing forwards in the engine. The feeler gauge should be connected to a spring balance and placed between piston and bore at right angles to the piston pin. When the pull amounts to 2.2 lb (1 kp), the mean clearance agrees with the thickness of the feeler gauge. Tests should be carried out at several different depth positions.
Pistons obtained as spare parts are not classified, but their diameter lies within the upper part of the tolerance range, so that in most cases the cylinder bore will have to be honed in order to get the right piston clearance when a new piston is fitted.
If the clearance obtained is excessive, the cylinder bores must be drilled to the next oversize. See group 0.

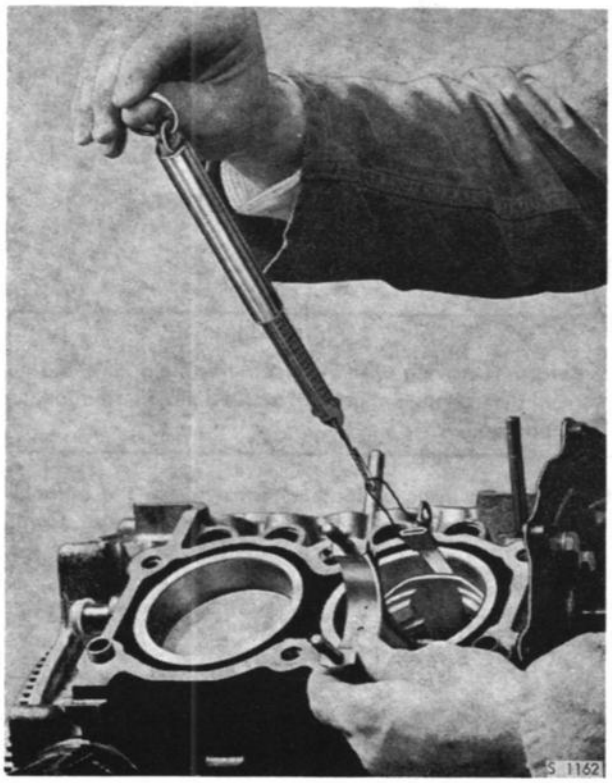

MEASUREMENT OF PISTON CLEARANCE

FITTING OF PISTON RINGS IN CYLINDER BORES

a) In a new or redrilled bore

Pass the piston rings one by one down into the bore. Use a piston turned upside down so that the ring takes up the proper position.
Measure the piston ring gap with a feeler gauge. The correct figures are given in group 0.
If the gap is too small, the ring must be trimmed with a special file.

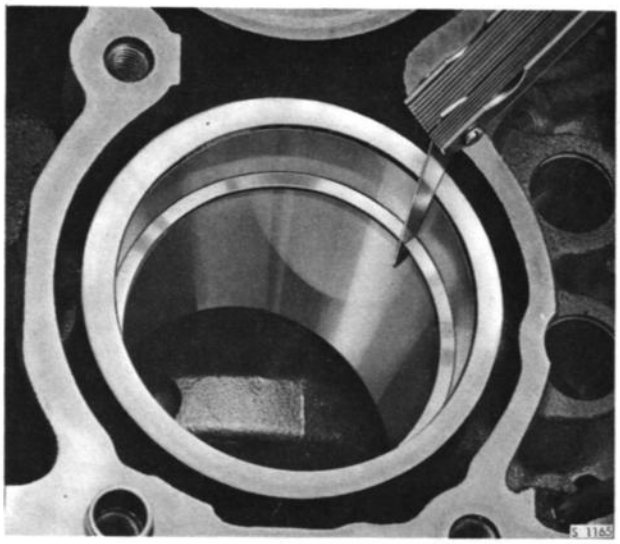

MEASUREMENT OF PISTON RING GAP

b) In a worn bore

When fitting piston rings in a worn cylinder bore, the ring gap must be measured in the lower reverse position, as the bore has the smallest diameter at this point.

7. Fit new connecting rod bolts.

> NOTE
>
> Fit new connecting rod bolts every time the crankshaft has been disassembled.

8. Coat the pistons, rings and cylinder bores with engine oil. Place the piston rings in the following manner:

The oil control ring center spring gap 180° from the mark on the top of the piston; the oil segments with the gaps staggered 1 in. (25 mm) on either side of the center spring gap; the lower compression ring gap 150° from one side of the center spring gap and the upper compression ring gap 150° from the other side of the center spring gap. Installation of the piston rings as above is essential for optimum sealing and low oil consumption.

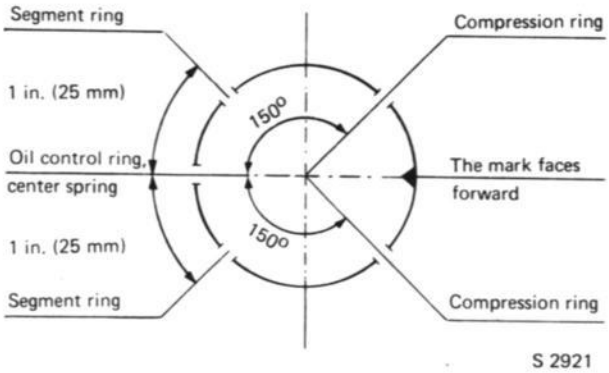

FITTING PISTON RING GAP

9. Install the piston together with connecting rod using tool 786228 by carefully pressing the piston with the handle of a hammer. Make sure that the mark on the top of the piston faces forwards. See fig.

PISTON ASSEMBLY

10. If new bearings are installed, check that the correct fitting clearance is obtained. The measuring procedure is described in section 216.
11. Install the bearing inserts dry in the connecting rods and then coat them with engine oil. Put on the bearing caps and tighten the nuts to the prescribed torque.

12. Coat the balance shaft journals and bearings with engine oil and install the balance shaft from the rear end of the block. See fig.

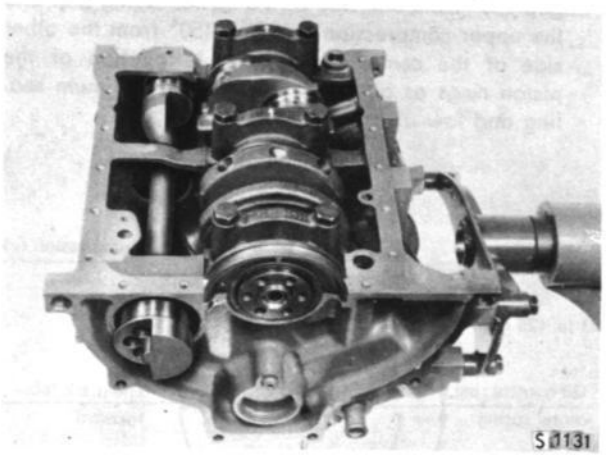

INSTALLATION OF BALANCE SHAFT

13. Apply a thin coat of sealing compound to the new balance shaft sealing washer and drive it into the block until it bottoms out. Install the washer with the flat side out. See fig.

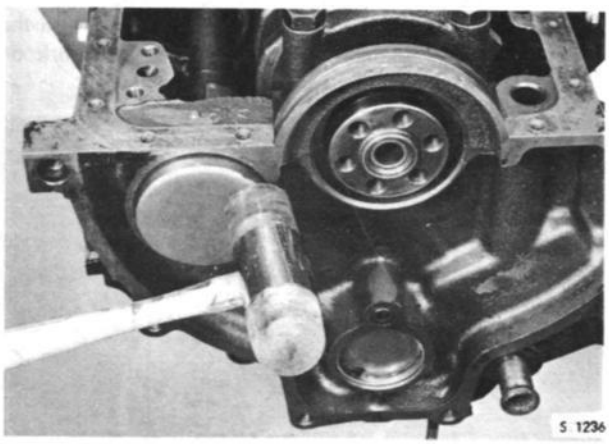

INSTALLATION OF BALANCE SHAFT COVER PLATE

14. Coat the two wedge-shaped seals with sealing compound and press them into the rear main bearing cap with a blunt screwdriver. See fig.

> NOTE
>
> The domed side of the seal must be turned to face the main bearing cap.

15. Clean the crankshaft flange and the flywheel. Install the flywheel, using new bolts.
16. Locate the key in the crankshaft. Secure the gear on the shaft with a bolt and washer, tightening to a torque of 36 ft-lb (5.0 kpm). See fig.

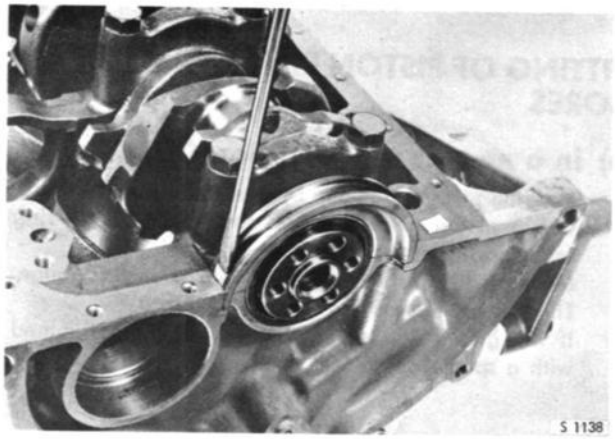

INSTALLATION OF SEALING KEYS, REAR MAIN BEARING CAP

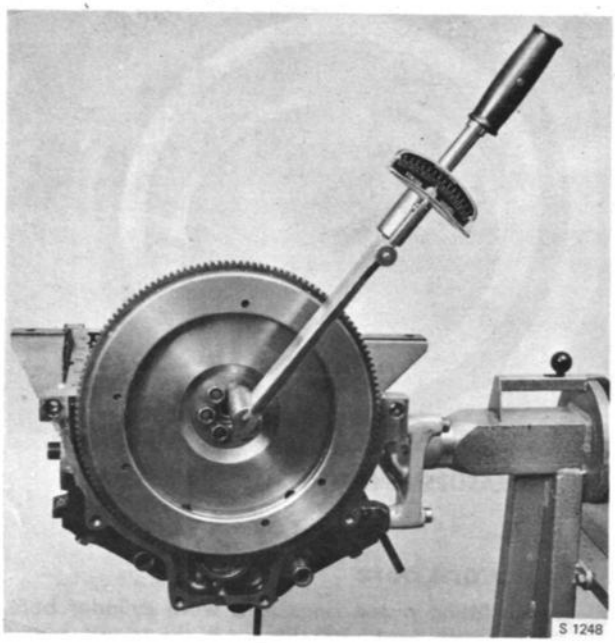

INSTALLATION OF FLYWHEEL

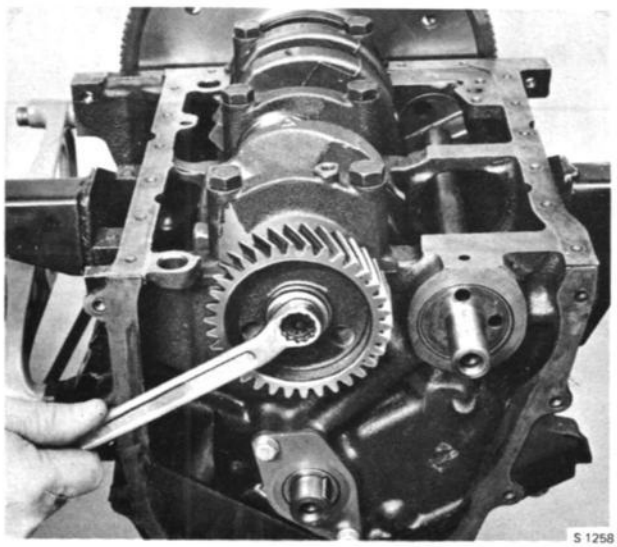

INSTALLATION OF CRANKSHAFT GEAR

Avoid tapping the gear, as this may cause damage to the axial bearings of the crankshaft.

17. Coat the camshaft bearings with engine oil and install the camshaft carefully in the engine block.
18. Install the spacer with the countersunk side towards the camshaft. Insert the key.
19. Position the thrust plate over the front of the camshaft so that it covers the main oil galley hole.

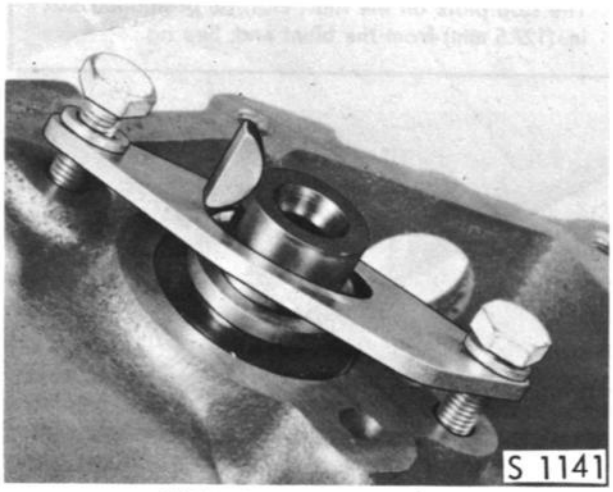

AXIAL CAMSHAFT BEARING

NOTE

The spacer is a little thicker than the camshaft thrust plate. The difference in measurement corresponds to the axial play in the camshaft. To indicate the size group, the spacers have red or blue markings. When fitting new parts, choose a spacer giving the correct axial play. A red spacer gives a small clearance and a blue one a larger clearance. Axial play 0,00098—0,0030 in. (0,025—0,076 mm.)

20. Apply a thin coat of sealing compound to the mounting surface of the intermediate plate on the front of the block and to the block. Position the gasket on the block and install the plate loosely with the two retaining bolts. Temporarily install the two lower bolts as guide dowels and tighten the two retaining bolts. Also make sure that the lower edge of the plate is in line with the level of the pan. Then remove the guide bolts.

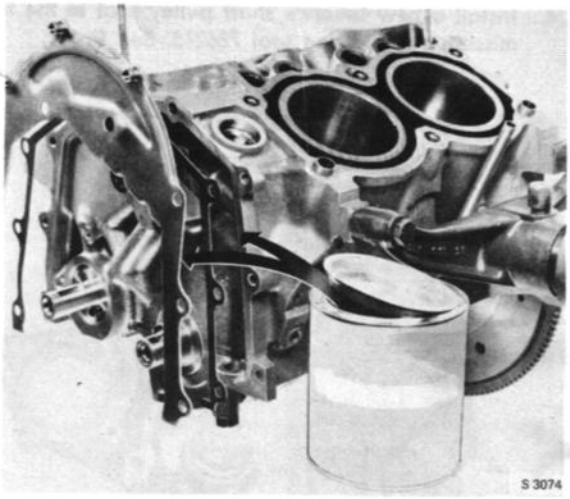

INSTALLATION OF INTERMEDIATE PLATE

21. Turn the crankshaft until the mark on the crankshaft gear faces the camshaft.
22. Pass the camshaft gear onto the camshaft so that the mark coincides with the mark on the crankshaft gear. Secure the camshaft gear with a retaining bolt and washer.
23. Install the balance shaft gear so that the mark coincides with the mark on the crankshaft gear.

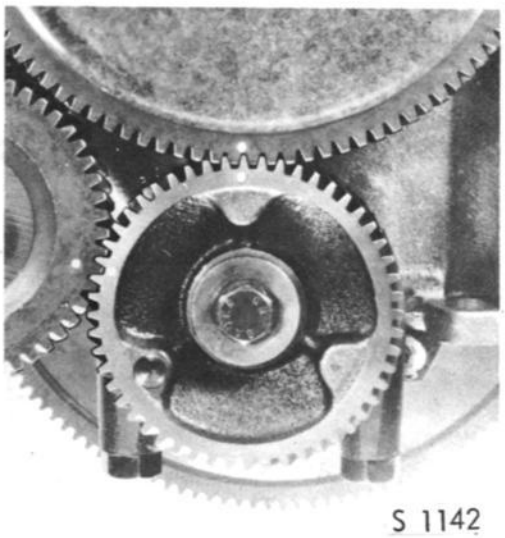

INSTALLATION MARKS, TRANSMISSION GEAR

24. Install a new balance shaft pulley seal in the transmission cover, using tool 786215. See fig.

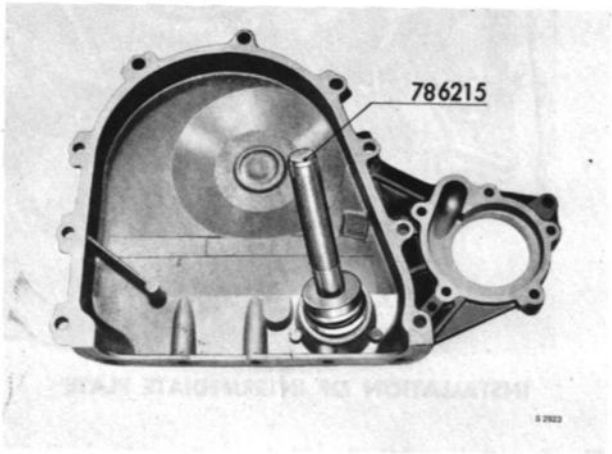

INSTALLATION OF TRANSMISSION COVER OIL SEAL

25. Apply a thin coat of sealing compound to the gasket mounting surfaces on the intermediate plate and transmission cover. Position the transmission cover gasket against the intermediate plate. Center the transmission cover with the special pilot tool 786214 and secure it with the 9 retaining bolts. See fig. To facilitate installation of the water pump, the latter should be secured to the transmission cover before this is installed on the engine.

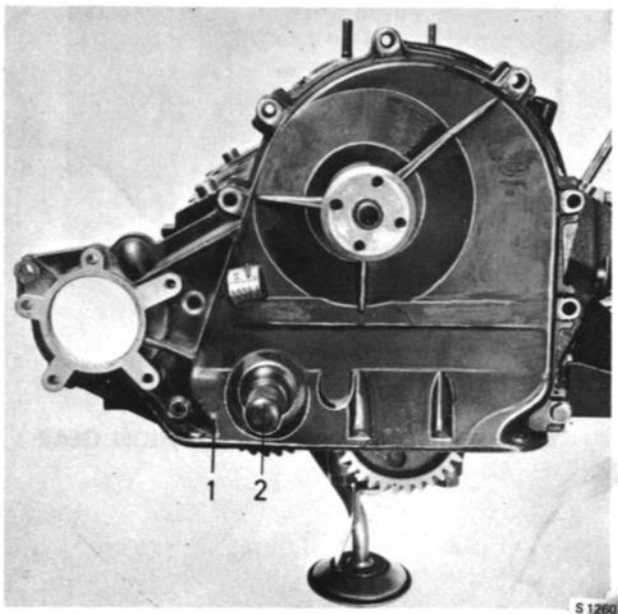

INSTALLATION OF TRANSMISSION COVER

1. Transmission cover
2. Centering arbor 786214

26. Lubricate the inner diameter of the balance shaft pulley seal with engine oil. Align the pulley key way with the balance shaft key and install the pulley, the flat washer and the retaining bolt.
27. Insert the oil pump drive shaft in the block with the pointed end first.

> NOTE
>
> The stop plate on the shaft must be positioned 5.02 in. (127.5 mm) from the blunt end. See fig.

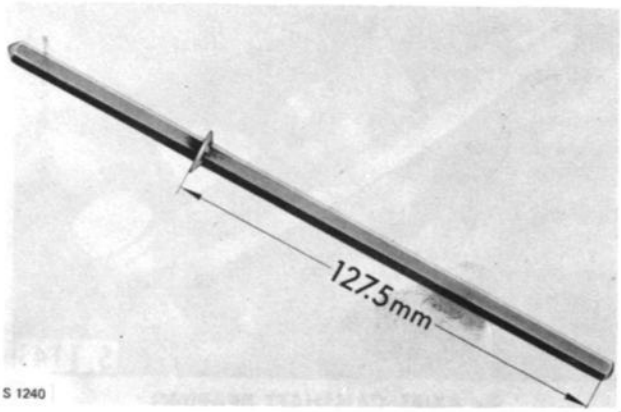

DRIVE SHAFT WITH HOLDER RING

28. Install the oil pump and its gasket. Tighten the actual pump bolts first and then the suction line bolt.
29. Insert the rubber seal in the groove in the rear main bearing cap.
30. Apply a coat of sealing compound to the two corner joints where the transmission cover, the intermediate plate and the edges of the oil pan meet. Position the oil pan gasket on the block, and insert the two tabs on the cork gasket under the recesses in the rear bearing cap rubber seal. See fig.

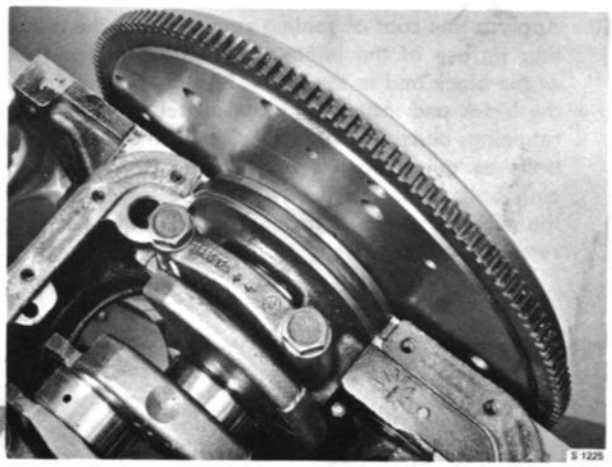

INSTALLATION OF OIL PAN GASKET

31. Install and secure the oil pan. Position the two bolts with the rubber washers at the rear balance shaft bearing. See arrows in the illustration.

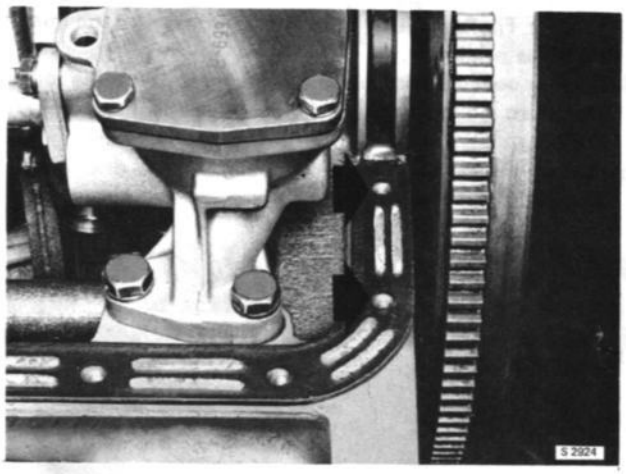

FITTING THE TWO BOLTS WITH RUBBER WASHERS

32. Lubricate the tappets and their bores with engine oil and install the tappets in the same sequence as they were originally fitted.
33. Install the cylinder head gaskets. The gaskets are marked "Front" and "Top".

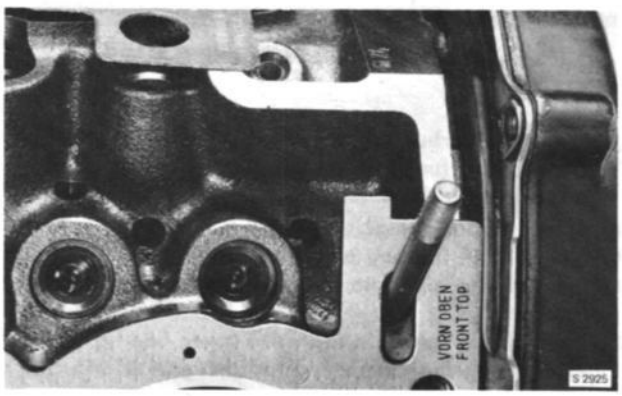

INSTALLATION OF CYLINDER HEAD GASKET

34. Install the complete cylinder heads, insert the bolts and tighten them in the sequence indicated to the correct torque, tightening in three stages as per the following table:

	kpm	ft-lb
1.	5.5	40
2.	7.0	50
3.	9.5	68

IMPORTANT

To ensure effective sealing, the bolts must be tightened in three stages to the prescribed torque in the sequence indicated.

NOTE

The outer, rear bolt for the righthand cylinder head is specially adapted for the engine earth cable.

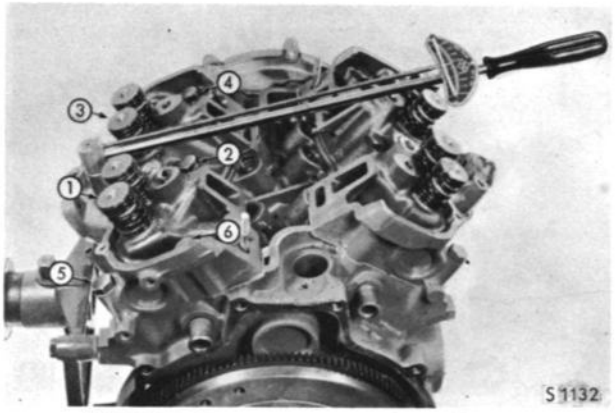

TORQUING OF CYLINDER HEAD BOLTS

35. Install the bracket for the side stay.
36. Dip the push rod ends in engine oil and install the push rods in their original positions in the tappets.
37. Lubricate the ends of the rocker arms with engine oil and install the oil return plate and rocker arm assembly. In so doing, align the push rods under the rocker arms. Secure the rocker arm assembly by alternately tigthening the two screws.

NOTE

Check that the oil return plate is not in contact with the valve springs.

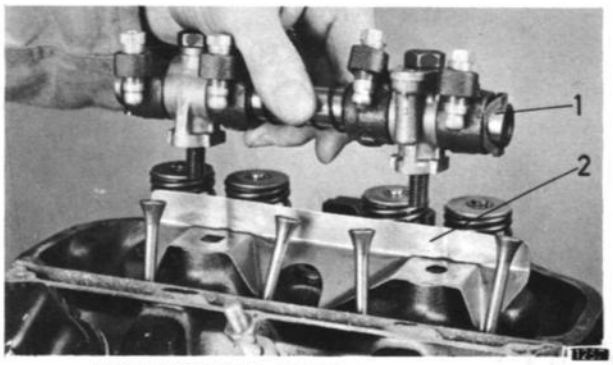

INSTALLATION OF ROCKER ASSEMBLY
1. Rocker shaft with rocker arms
2. Oil return plate

38. Apply sealing compound to the surfaces of the cylinder heads as shown in the illustration. Install the induction manifold gasket and make sure that the protruding part of the righthand cylinder head gasket enters the aperture in the induction manifold gasket. See fig. page 211-2.

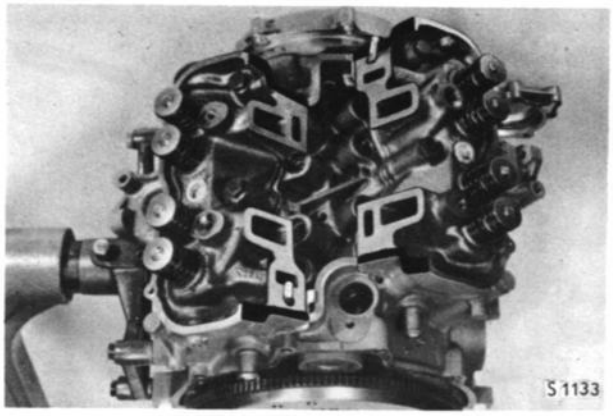

ASSEMBLED CYLINDER HEAD WITH MARKED SURFACES FOR APPLICATION OF SEALING COMPOUND

39. Fit the induction manifold. Tighten the screws and nuts with the tightening torque specified in Chapter 0, page 020-5.

> IMPORTANT
>
> To ensure effective sealing, the bolts must be tightened in two stages to the prescribed torque in the sequence indicated.

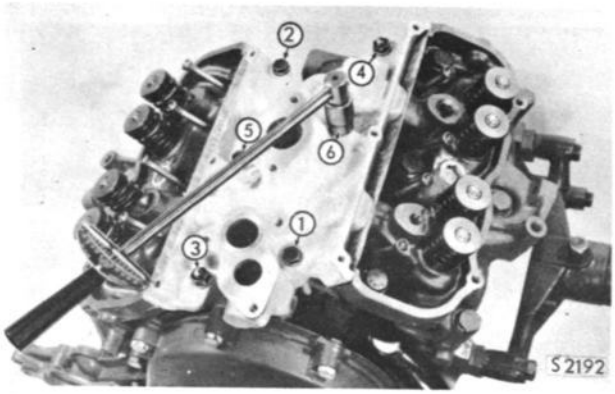

TORQUING OF INDUCTION MANIFOLD

40. Install the thermostat, the gasket and the thermostat housing cover in ihe front part of the induction manifold, placing the thermostat holder at right angles to the longitudinal direction of the engine.
41. Adjust the valve play. See the section "Valve adjustment".
42. Install a new oil filter. Tighten it by hand until the oiled rubber seal makes contact with the cylinder block and then tighten it another half turn.
43. Install the fuel pump push rod, the gasket and the pump. Fit the push rod with the same end on the cam as originally.
44. Apply sealing compound to the threads of the oil pressure gauge and install the gauge in the block. See fig.
45. Install the clutch after having aligned the disc with tool 784064.

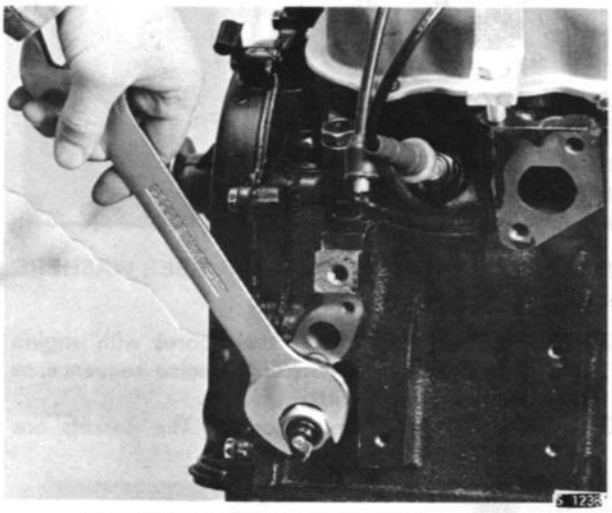

INSTALLATION OF OIL PRESSURE GAUGE

46. Install the carburetor, together with its gasket.
47. Connect the fuel lines to the carburetor and to the fuel pump. Fit the hose clamps.
48. Refit the spark plugs.
49. Reinstall the fan belt pulley and fan.
50. Reinstall the alternator and its bracket. Tighten the fan belt.
51. Insert a new gasket in the valve cover. See fig. page 211-2. Press the clamp ends of the gasket into the notches in the cover.

> NOTE
>
> Before the valve covers of the cylinder heads are refitted, the lubrication of the rocker shaft must be checked with the engine running.

52. Reinstall the distributor. (see Group 3, section 342).
53. Reconnect the vacuum line to the distributor.
54. Install the distributor cap and attach the ignition cables.
55. Put in the oil dipstick.
56. Install the air filter.

CYLINDER HEADS

Disassembly (engine removed)

1. Remove the air filter.
2. Take off the distributor cap and disconnect the ignition cables.
3. Disconnect the vacuum line from the distributor.
4. Remove the distributor.
5. Remove the valve cover.
6. Detach the fuel line from the carburetor.
7. Remove the carburetor.
8. Back off and remove the induction manifold bolts and nuts. Separate the induction manifold from the gasket and remove it.
9. Remove the rocker arm assembly by alternate slackening of the two bolts and remove the oil return plates.
10. Remove the push rods and keep them in the correct sequence.
11. Remove the cylinder head.
12. Take away the cylinder head gasket.

Reassembly

1. Remove all residual gasket material from the contact surfaces.
2. Place the cylinder head gasket over the two locating sleeves on the engine block. The lefthand and righthand cylinder head gaskets are different. They are marked "Front" and "Top" respectively.

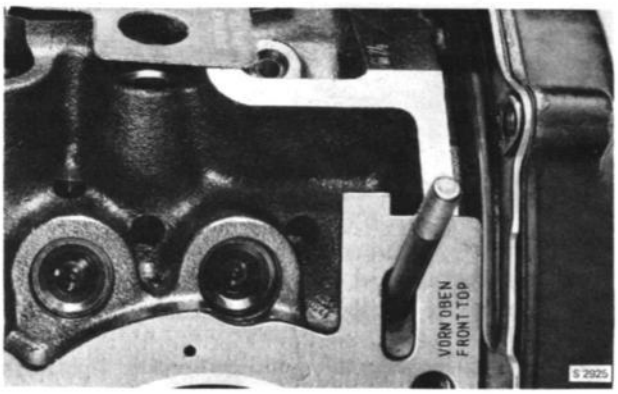

INSTALLATION OF CYLINDER HEAD GASKET

3. Install the cylinder head on the locating sleeves. Tighten the bolts in three stages to the prescribed torque in the indicated sequence. See fig.

	kpm	ft-lb
1.	5.5	40
2.	7.0	50
3.	9.5	68

IMPORTANT

To ensure effective sealing, the bolts must ge tightened in three stages to the prescribed torque in the sequence indicated.

NOTE

The outer, rear bolt for the righthand cylinder head is specially adapted for the engine earth cable.

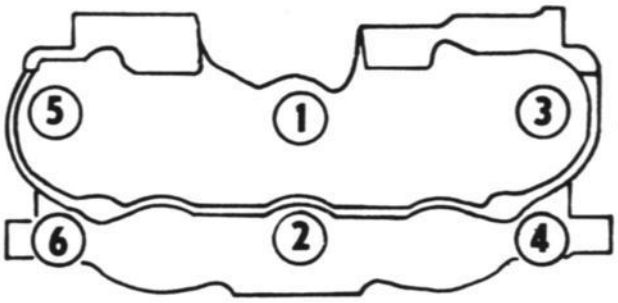

S 1125

TIGHTENING SEQUENCE, CYLINDER HEAD BOLTS

4. Apply sealing compound to the surfaces of the cylinder heads as indicated in the illustration on page 210-11. Install the induction manifold gasket and make sure that the protruding part of the righthand cylinder head gasket enters the aperture in the induction manifold gasket. See fig.

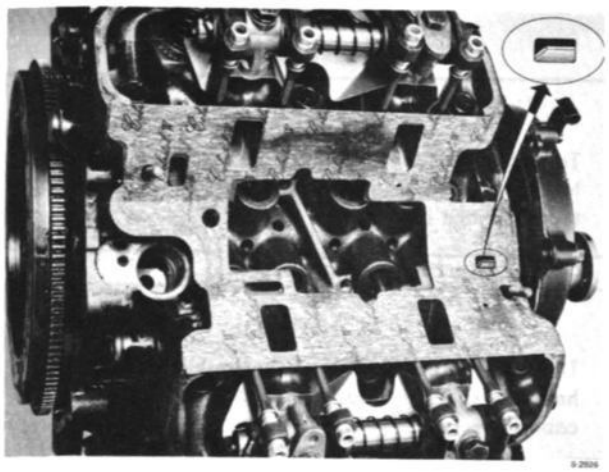

INSTALLATION OF INDUCTION MANIFOLD GASKET

5. Fit the induction manifold. Tighten the screws and nuts with the tightening torque specified in Chapter 0, page 020-5.

> IMPORTANT
>
> To ensure effective sealing, the bolts must be tightened in two stages to the prescribed torque in the sequence indicated.

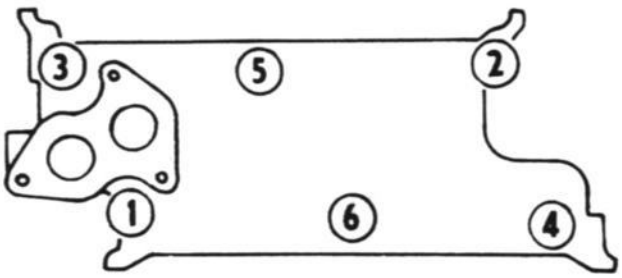

S 2184

TIGHTENING SEQUENCE, INDUCTION MANIFOLD BOLTS

6. Dip the push rod ends in engine oil and install the push rods in their original positions in the tappets.
7. Lubricate the ends of the rocker arms with engine oil and install the oil return plate and rocker arm assembly. In so doing, align the push rods under the rocker arms and check that the oil return plate is not in contact with the valve springs. Secure the rocker arm assembly by alternately tightening the two screws.
8. Adjust the valve play. See the section "Valve adjustment".
9. Install the distributor in the engine block. (See group 3, section 342).
10. Insert a new gasket in the valve cover. See fig. Press the clamp ends of the gasket into the notches in the cover.

> NOTE
>
> Before the valve covers of the cylinder heads are refitted, the lubrication of the rocker shaft must be checked with the engine running.

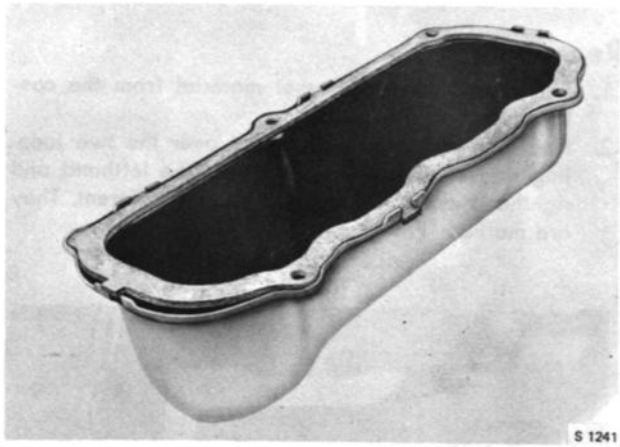

S 1241

INSERTION OF NEW GASKET IN VALVE COVER

11. Reinstall the carburetor, together with its gasket.
12. Reconnect the fuel and vacuum lines.
13. Reinstall the distributor cap and connect the ignition cables.
14. Reinstall the alternator and its bracket. Tighten the fan belt.
15. Install the air filter.

> NOTE
>
> Retighten the cylinder head bolts and adjust the valves when the car has been driven for about 1.200 miles (2.000 km).

REMOVAL AND INSTALLATION OF ROCKER ARM ASSEMBLIES

Removal

1. Remove the air filter.
2. Disconnect the ignition cables from the spark plugs and valve cover.
3. Remove the bolts and lift off the valve cover.
4. Remove the rocker arm assembly by alternate slackening of the two bolts and take away the rocker arm assembly and oil return plate.

Installation

1. Pour a drop of engine oil into each rocker arm cup and onto each valve spindle.
2. Place the oil return plate on the cylinder head, put on the rocker shaft and align the adjusting screws over the push rods.
3. Check that the oil return plate is not in contact with the valve spring. Tighten the rocker shaft retaining screws alternately and evenly to the prescribed torque.
4. Adjust the valve play. See the section "Valve adjustment".
5. Insert a new gasket in the valve cover. See fig. page 211-2. Press the clamp ends of the gasket into the notches in the cover.

> NOTE
> Before the valve covers of the cylinder heads are refitted, the lubrication of the rocker shaft must be checked with the engine running.

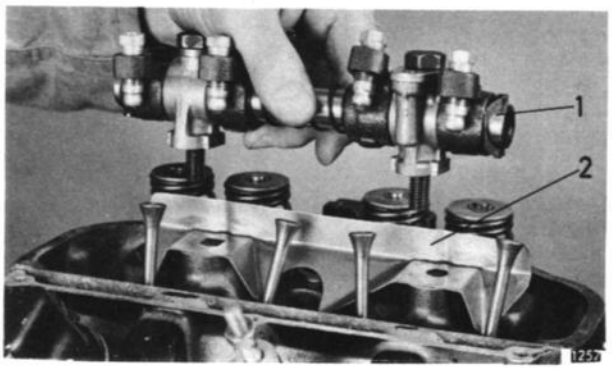

REMOVAL OF ROCKER ARM ASSEMBLY

1. Rocker shaft with rocker arms
2. Oil return plate

6. Reconnect the ignition cables in the correct positions. Secure the ignition cable holder on the valve cover.
7. Install the air filter.

DISASSEMBLY AND REASSEMBLY OF ROCKER ARM SHAFT

Disassembly

Drive the roll pins out of the shaft with a drift. Remove the spring washers, rocker arms, springs and rocker shaft brackets.

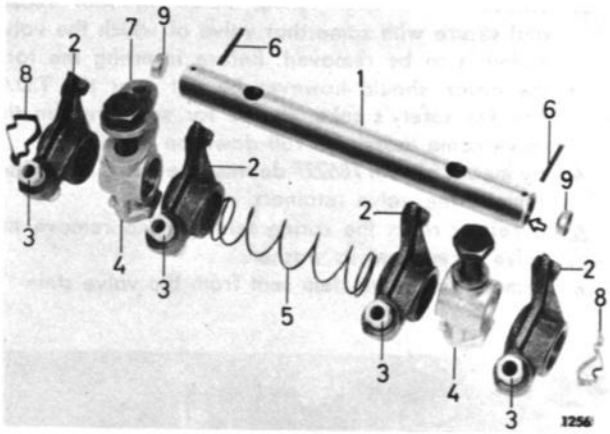

ROCKER ASSEMBLY, DISMANTLED

1. Rocker shaft
2. Rocker arms
3. Adjusting screws
4. Rocker shaft bracket
5. Spring
6. Clamping sleeve
7. Cover plate
8. Spring washer
9. Sealing washer

Reassembly

In reassembly, the oil holes in the rocker shaft for lubrication of the rocker arms must be turned downwards against the cylinder head. This position is marked by a grinding at the end of the rocker shaft. See arrow in the figure.

First, drive a roll pin into the shaft and then install the various parts as indicated in the illustration. The rocker shaft bracket with the oil outlet must be positioned at the rear on the righthand side of the engine and at the front on the lefthand side of the engine.

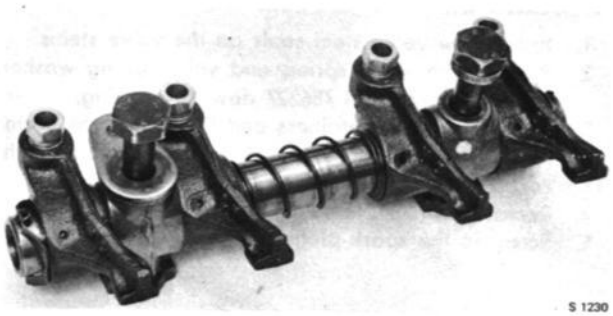

ROCKER ASSEMBLY

REPLACEMENT OF VALVE STEM SEALS

Engine installed in the car

Removal

1. Remove the rocker arm assembly in accordance with the instructions on page 214-1.
2. Unscrew the spark plugs.
3. Instead of a spark plug, screw in tool 786240 and secure with same that valve of which the valve spring is to be removed. Before inserting the tool, the piston should however be put near the T.D.C. This for safety's sake, should for some reason the valve come loose and fall down on the piston.
4. By means of tool 786227 depress the valve spring and remove the valve retainers.
5. Carefully relax the spring tension, and remove the valve spring and its washer.
6. Remove the valve stem seal from the valve stem

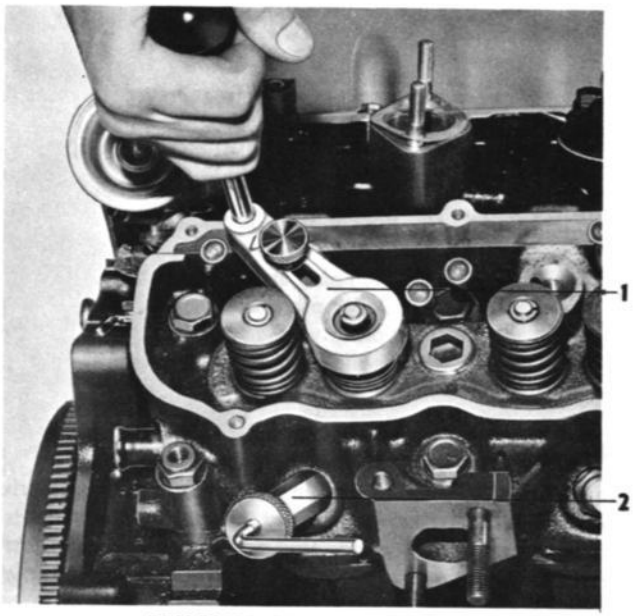

REMOVAL OF VALVE SPRING
1. Tool 786227
2. Tool 786240

Installation

1. Install new valve stem seals on the valve stems.
2. Position the valve spring and valve spring washers and press with tool 786227 down the spring.
3. Install the valve retainers and then relax the spring tension. Check that the retainer has adopted the correct position.
4. Remove tool 786240.
5. Screw in the spark plugs.
6. Install the rocker arm assembly in accordance with the instructions on page 214-1.
7. Adjust the valve play.
8. Install the valve covers.
9. Reconnect the ignition cables.
10. Install the air filter.

VALVE GRINDING

Removal of valves

Press down the valve spring washer with valve spring pliers. Remove the valve retainer, slowly relax the plier tension, remove the spring washer, the spring, the oil seal and the valve.

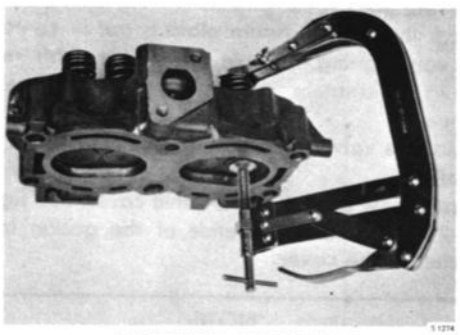

REMOVAL OF VALVES

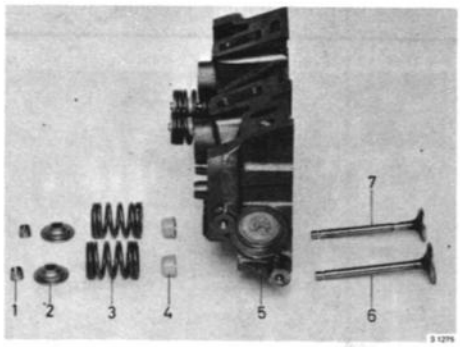

CYLINDER HEAD, AND DISASSEMBLED VALVES
1. Retainer
2. Valve-spring washer
3. Valve spring
4. Rubber sealing
5. Cylinder head
6. Inlet valve
7. Exhaust valve

Reaming of valve guides

After prolonged running, the valve guides become oval-worn on the rocker arm side. In reaming, therefore, the work must always be done from the valve seat side. See fig. The size of reamer to be chosen depends on the

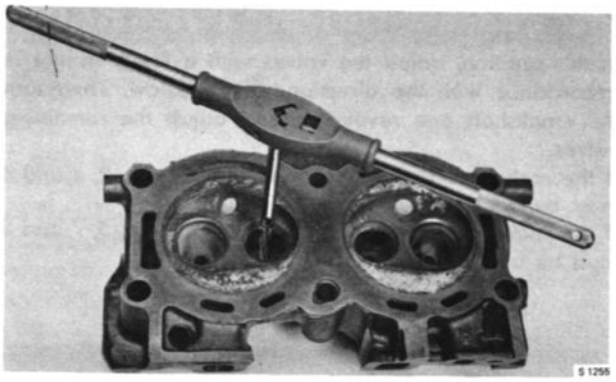

REAMING OF VALVE GUIDE

amount of wear on the guide and the valve oversizes available (see spare parts list). Reaming must always be commenced with the reamer having the smallest diameter as the work depth of the bigger diameters is too large. Use kerosene as cutting oil for this work.
Reaming of a valve guide necessitates installation of a new valve corresponding to the oversize of the reamer used. Thereafter, the valve seat must be carefully reground.

> NOTE
> Machining of the valve seat can give a good result only if the valve guide is in good condition. Therefore, always check the valve clearance in the guide before commencing any other work.

Milling the valve seat

Clean all parts and remove carbon deposits and impurities from the valve and the passage in the cylinder head. The valve can either be ground in a machine or renewed, depending on its condition. Insert the pilot arbor in the valve guide from the valve seat side and screw in the clamping screw until the guide is locked in the valve guide. The valve seats in the cylinder head must first be milled clean with a 45° milling cutter. See fig.
As a rule, the width of the valve seat is excessive after this milling operation and it is then necessary to reduce the seat.
Reduction from inside is made with a 75° correction milling cutter and from outside with an 11° correction milling cutter. Reduction must always be performed so that the sealing surface of the cylinder head will meet the valve seat as close as possible to the center of the seat. This can easily be checked with marking dye. See fig. After adjustment, the width of the seat shall be 0.059—0.070 in. (1.5—1.7 mm) for both intake and exhaust valves.

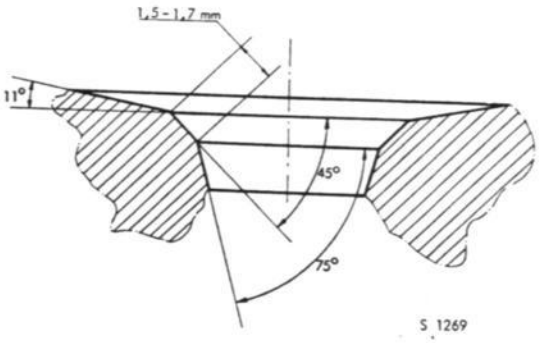

VALVE SEAT ANGLES

> NOTE
> Correction milling must always be limited, as it is never permissible to remove more material than necessary. Milling set includes milling cutters of different sizes for intake and exhaust valve seats.

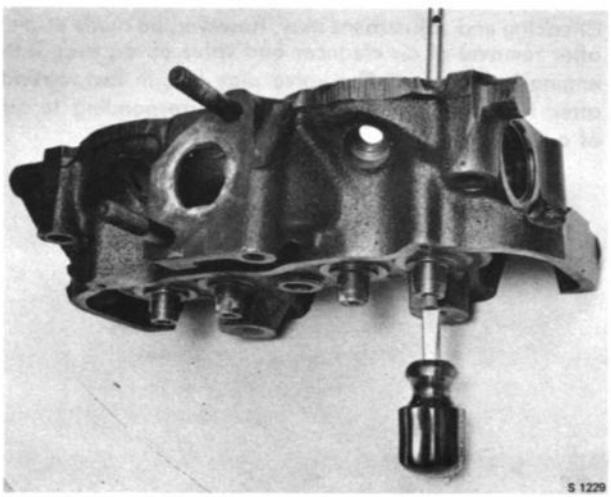

APPLICATION OF PILOT ARBOR FOR VALVE MILLING CUTTER

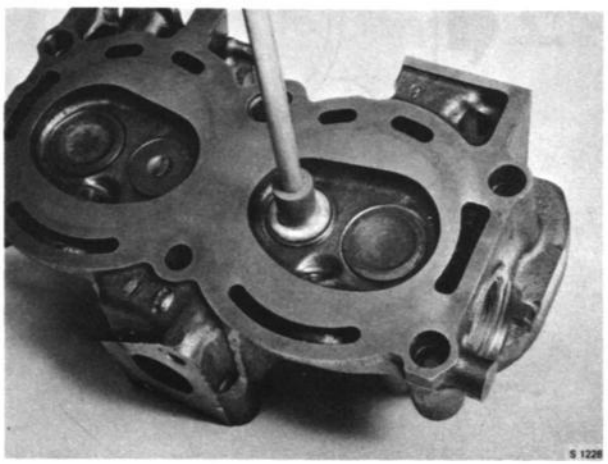

VALVE HONING

Valve honing

Apply a thin coat of grinding paste to the valve seat and insert the valve in the cylinder head. Make a few honing passes with the tool, carefully clean all grinding paste out of the seat and check the surface with marking dye. If necessary, repeat this procedure and also do further milling if this should prove to be required.

Installation of valves

Lubricate the valve stems and guides, and insert the valve with oil seal, valve spring and spring washer. Press the spring washer and spring down with the valve spring pliers and insert the two retainers.

ADJUSTMENT OF VALVES

Set the mark on the pulley immediately opposite the dead center mark on the transmission cover. If the crankshaft is turned slightly back and forth in this position, the rocker arms at the first or fourth cylinder will move in opposite directions (will rock).

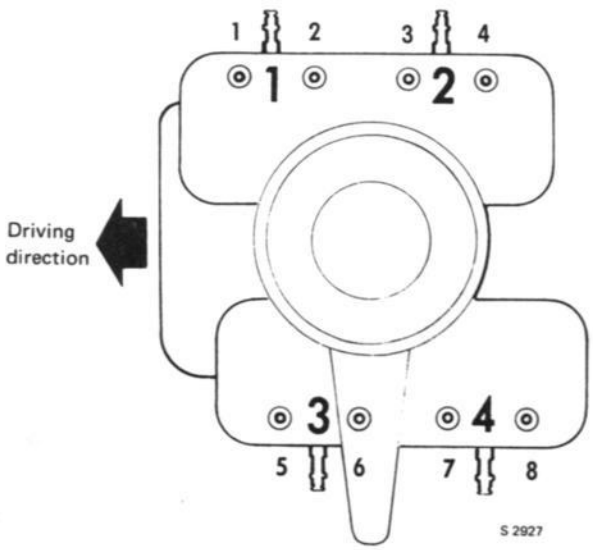

VALVE NUMBERING

In this position, adjust the valves with a feeler gauge in accordance with the directions given below. Then turn the crankshaft one revolution and adjust the remaining valves.

If the rocker arms rock at cylinder 4, valves 1, 2, 4 and 6 must be adjusted.

If the rocker arms rock at cylinder 1, valves 3, 5, 7 and 8 must be adjusted.

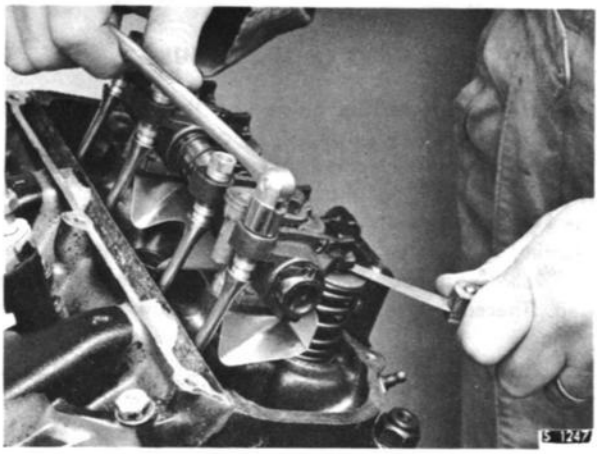

VALVE ADJUSTMENT

To ensure a smooth running and the lowest sound level of the engine it is essential that the valve play is accurately adjusted. The adjustment to be made with the engine cold.

Recommended valve play:

intake valves 0.014 in. (0,35 mm)
exhaust valves 0.016 in. (0,40 mm)

Instructions

Checking and adjustment may, however, be made at once after removal of air cleancer and valve cover, even if the engine is still warm. The valve play has, in fact, already after 10 minutes reached a value corresponding to that of a cold engine.

CHECKING THE COMPRESSION PRESSURE

Before this check is performed, all spark plugs must be removed after the engine has been operated long enough for it to have reached the correct working temperature. Insert a new graph paper in the compression gauge and press the tool into the spark plug hole. Turn the engine round with the starter and with the accelerator pedal pressed right down, until the reading no longer increases. Bleed the instrument and feed the graph paper forward before measuring in the next cylinder. It is more important for the pressure to be equal in all cylinders than for a high compression figure to be obtained. If large differences in pressure are recorded, the compression pressure should be rechecked. If too low a pressure is due to cylinder wear or leaky valves, this can be decided by injecting a little engine oil into the suspected cylinder. As the oil practically completely seals around the pistons, the true cause of the leak can be established.

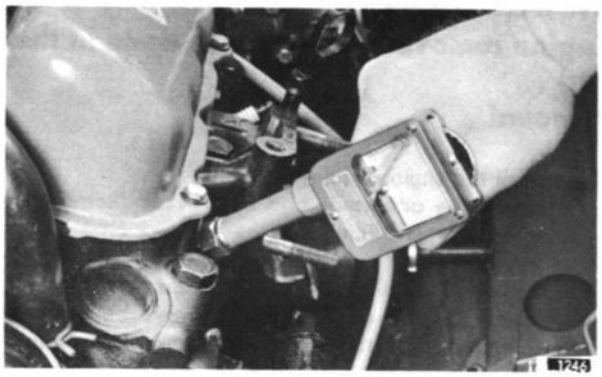

MEASURING COMPRESSION PRESSURE

REMOVAL AND INSTALLATION OF VALVE COVER

1. Remove the air filter. Detach the ignition cables from the plugs and valve cover. Remove the screws. Lift off the valve cover.
2. If a new gasket is to be installed, press the gasket tabs into the recesses in the cover. Put the valve cover on the cylinder head. Tighten the bolts evenly to the prescribed torque.

> NOTE
>
> The valve cover with the oil filler cap must always be installed on the righthand side of the engine.

TRANSMISSION COVER, REMOVAL AND INSTALLATION

Engine removed (can also be done in the car)

Removal

1. Install the engine on a work stand.
2. Remove the alternator and its bracket. (Removed in connection with lifting out the engine.)
3. Remove the fan and fan belt pulley.
4. To prevent oil sludge and impurities from entering the engine, the oil pan must always be removed downwards with the engine in the normal position.
5. Disconnect the water hoses from the water pump.
6. Remove the balance shaft pulley.
7. Remove the transmission cover.

> NOTE
>
> The oil pan cannot be removed with the engine installed in the car. Instead, back off and remove the seven front bolts in the oil pan. If this procedure is adopted, however, there is a great risk that the front part of the pan gasket will be damaged.

Installation

1. If this job is done in the car, it is nearly always necessary to renew the part of the pan gasket that rests against the transmission cover. The corresponding part of a new gasket must then be cut off with a sharp knife, carefully fitted, and glued to the rest of the gasket.
2. Apply a thin coat of sealing compound to the mounting surfaces of the transmission cover. Put the gasket in place. Put on the cover and center it with tool 786214 until all the bolts have been tightened.

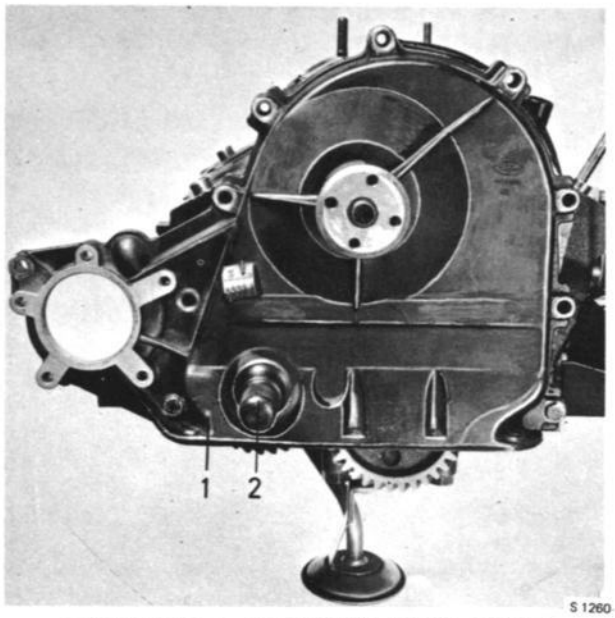

INSTALLATION OF TRANSMISSION COVER

1. Transmission cover
2. Centering arbor 786214

3. Lightly oil the pulley shaft. Put on the pulley and tighten it with a bolt and washer.
4. Apply a coat of sealing compound to the two corner joints where the transmission cover, the intermediate plate and the edges of the oil pan meet. Position the oil pan gasket on the block and insert the two tabs on the cork gasket under the recesses in the rear bearing cap rubber seal.
5. Install and secure the oil pan. Position the two bolts with the rubber washers at the rear balance shaft bearing. See arrows in the figure.

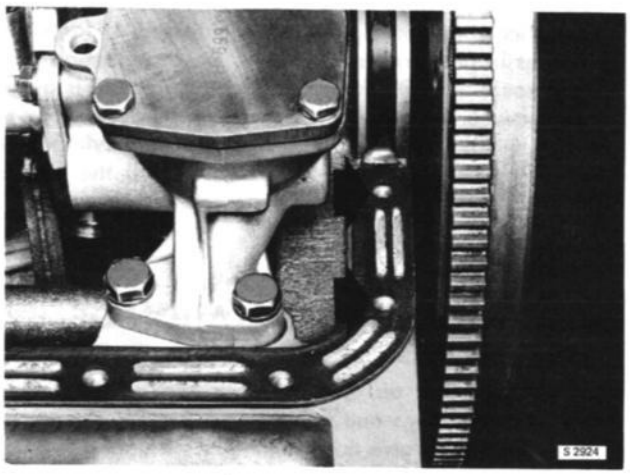

FITTING THE TWO BOLTS WITH RUBBER WASHERS

6. Install the fan and fan belt pulley.
7. Reconnect the water hoses to the water pump. To be installed after reassembly together with the gear box.
8. Install the alternator and tighten the fan belt. To be installed after reassembly together with the gear box.

TRANSMISSION COVER, REPLACEMENT OF BALANCE SHAFT SEAL

(Transmission cover removed)

Drive out the seal, using tool 786214.

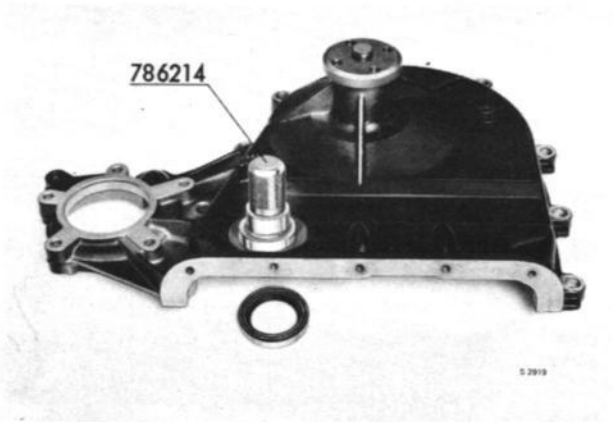

REMOVAL OF SEAL, TRANSMISSION COVER

Drive in the new seal in the transmission cover, using tool 786215, until it bottoms out.

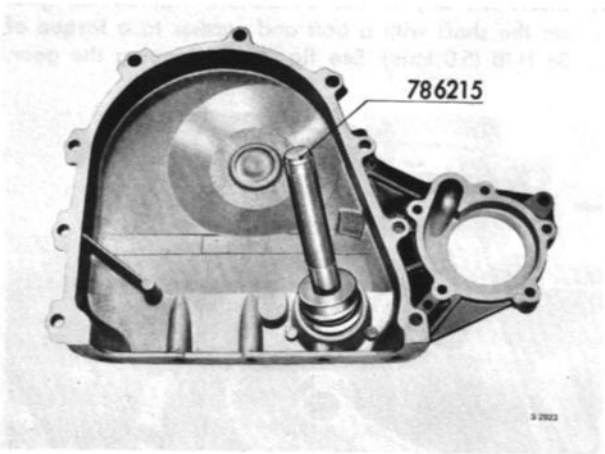

INSTALLATION OF OIL SEAL, TRANSMISSION COVER

REPLACEMENT OF FAN BEARING

(Transmission cover removed)

To press out the fan bearing, use a length of piping with an inside diameter of 2 in. (50 mm) to hold up the transmission cover.

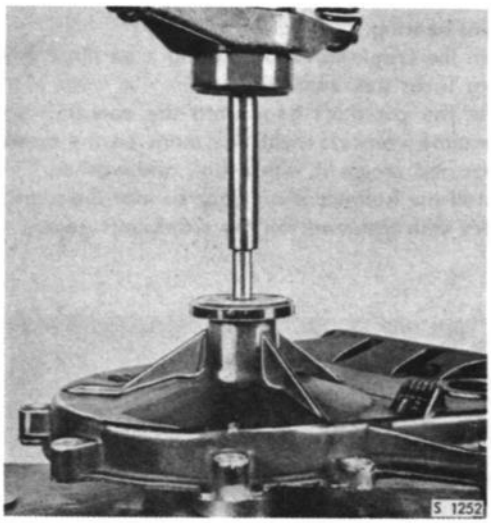

REMOVAL OF FAN BEARING

Press the bearing together with the shaft out from the transmission cover with an arbor. The sealing washer on engines up to No.40 399 will be pressed out downwards at the same time, and the flange will remain loose on the transmission cover. Commence reassembly by pressing the new shaft and bearing into the transmission cover. Next, place the cover on the length of piping again and press the new bearing in until it bottoms out, using water pump tool 78 62 19. Place a support under the short shaft end and press the flange onto the new shaft to the dimension shown in the figure. Do not refit the sealing washer.

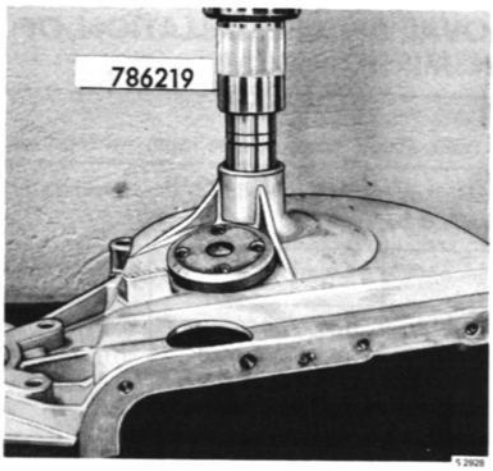

INSTALLATION OF FAN BEARING

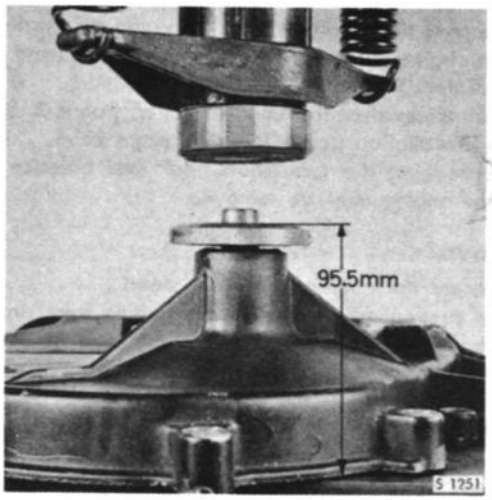

INSTALLATION POSITION FOR FAN PULLEY FLANGE

REMOVAL AND INSTALLATION OF TRANSMISSION GEAR

NOTE
The transmission gears can be replaced separately.

The backlashes (side play) valid for the transmission gears are specified below:

	Camshaft gear	Balance shaft gear
New gears	0.0020—0.0079 in. (0.05—0.20 mm)	0.0020—0.0055 in. (0.05—0.14 mm)
Max. backlash (wearing limit)	0.0157 in. (0.4 mm)	0.0157 in. (0.4 mm)

A side play of 0.0157 in. (0.40 mm) in the balance shaft gear is equivalent to 0.022 in. (0.56 mm) on the outside diameter of the balance shaft pulley.
Changing of the camshaft gear only can be carried out with the engine in the car after removal of the front panel and radiator.
See also removal of transmission cover, points 2, 3, 5—7 and for installation points 1 and 2, page 215-1.
When changing the crankshaft gear and balance shaft gear, the engine must be removed.

Removal

1. Secure the engine in a work stand.
2. To prevent oil sludge and impurities from dropping down into the engine, the oil pan must be removed downwards with the engine in the normal position.
3. Remove the balance shaft pulley.
4. Disconnect the hoses from the water pump.
5. Remove the transmission cover.
6. Back off the screws for the camshaft gear and crankshaft gear.
7. Turn the crankshaft round until the marks on the gears coincide.
8. Remove the screw and washer for the camshaft gear. Pull off the gear by hand.
9. Remove the balance shaft gear.
10. Pull the crankshaft gear off the crankshaft, using tool 78 62 18.

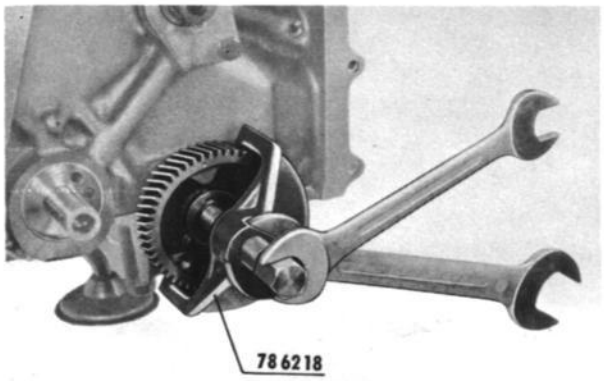

REMOVAL OF CRANKSHAFT GEAR

Installation

1. Insert the key in the crankshaft. Tighten the gear on the shaft with a bolt and washer to a torque of 36 ft-lb (5.0 kpm). See fig. Avoid tapping the gear, as this involves a risk of damage to the crankshaft axial bearing.
2. Turn the crankshaft until the mark on the crankshaft gear faces the camshaft.
3. Pass the camshaft gear onto the camshaft so that the mark coincides with the mark on the crankshaft gear and secure it with a bolt and washer.
4. Install the balance shaft gear so that the mark coincides with the mark on the crankshaft gear.

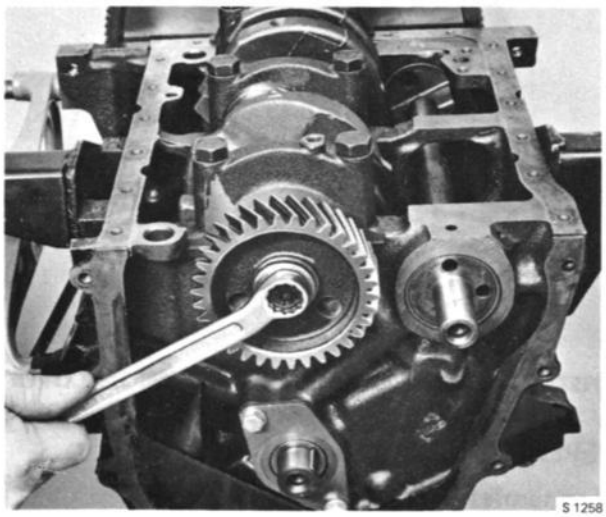

INSTALLATION OF CRANKSHAFT GEAR

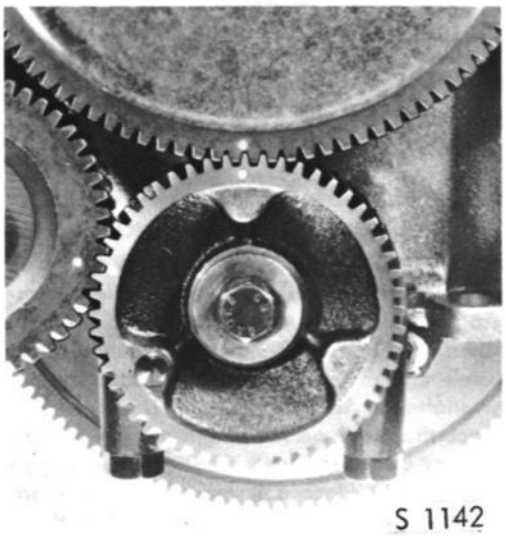

INSTALLATION MARKS, TRANSMISSION GEAR

5. Apply sealing compound to the mounting surfaces of the transmission cover. Position the gasket. Put on the transmission cover and center it with tool 786214 until all the bolts have been tightened. See page 215-6.
6. Lightly oil the pulley shaft. Put on the pulley and tighten it with a bolt and washer.
7. Apply a coat of sealing compound to the corner joints where the transmission cover, the intermediate plate and the edges of the oil pan meet. Position the oil pan gasket on the block and insert the two tabs on the cork gasket under the recesses in the rear bearing cap rubber seal.
8. Install and secure the oil pan. Position the two bolts with the rubber washers at the rear balance shaft bearing. See arrows in the illustration.

REMOVAL AND INSTALLATION OF CAMSHAFT

Can also be done with the engine in the car

Removal

1. Install the engine on a work stand.
2. Remove the air filter.
3. Disconnect the vacuum line from the distributor.
4. Remove the distributor, distributor cap and ignition cables.
5. Remove the valve covers.
6. Disconnect the fuel line.
7. Remove the carburetor.
8. Remove the fuel pump and the push rod.

> NOTE
>
> Mark the end of the pump push rod that rests against the camshaft for identification at reassembly.

9. Remove the induction manifold bolts and nuts. Separate the induction manifold from the gasket and remove it.
10. Remove the rocker arm assemblies by alternate slackening of the two bolts and remove the oil return plates.
11. Remove the push rods and keep them in the correct sequence.
12. Remove the cylinder heads.
13. Take away the cylinder head gaskets.
14. Remove the tappets with the aid of a bent wire and keep them in the correct order.

REMOVAL OF TAPPETS

15. To prevent oil sludge and impurities from entering the engine, the oil pan must be removed downwards with the engine in the normal position. (Engine removed.)

> NOTE
> The oil pan cannot be removed with the engine in the car. Instead, back off and remove the seven front bolts in the oil pan. If this procedure is adopted, however, there is a great risk that the front part of the pan gasket will be damaged.

16. Remove the balance shaft pulley.
17. Disconnect the water hoses from the water pump.
18. Remove the transmission cover.
19. Remove the bolt and washer for the camshaft gear. Remove the gear by hand.
20. Remove the camshaft thrust plate.
21. Pull the camshaft carefully out of the engine.

> NOTE
> As the bearings have different diameters, the camshaft can only be removed to the front, even if the rear cover plate is removed.

22. Drive the key out of the camshaft with a plastic mallet and remove the spacer.

Installation

1. Lubricate the camshaft bearings with engine oil and pass the camshaft carefully into the engine block.
2. Pass on the spacer with the countersunk side facing the camshaft. Insert the key.
3. Position the thrust plate over the front of the camshaft so that it covers the main oil galley hole.

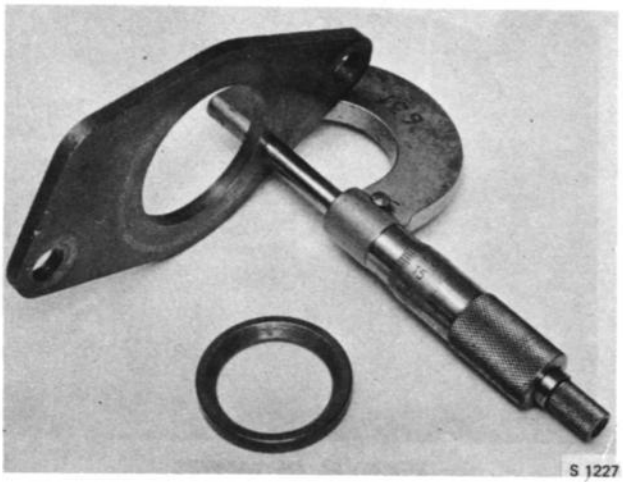

MEASUREMENT OF THRUST PLATE

> NOTE
> The spacer is a little thicker than the camshaft thrust plate. The difference in measurement corresponds to the axial play in the camshaft. The spacer is available in two different thicknesses. To indicate the size group, the spacers have red or blue markings. When fitting new parts, choose a spacer giving the correct axial play. A red spacer gives a small clearance, and a blue one a larger clearance. Axial play 0,00098—0,0030 in. (0,025—0,076 mm.)

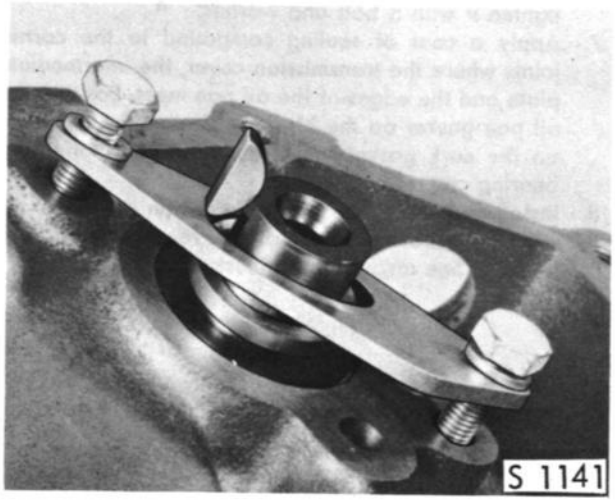

AXIAL CAMSHAFT BEARING

4. Turn the crankshaft until the mark on the crankshaft gear faces the camshaft.
5. Pass the camshaft gear onto the camshaft so that the mark coincides with the mark on the crankshaft gear. Secure the camshaft gear with a retaining bolt and washer.

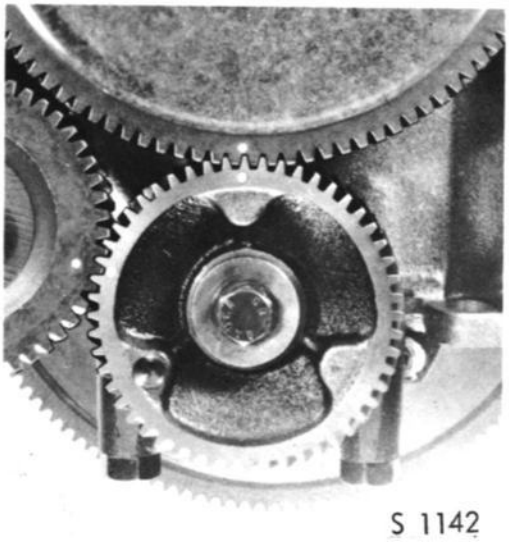

INSTALLATION MARKS, TRANSMISSION GEAR

6. If this job is done in the car, it is nearly always necessary to renew the part of the oil pan gasket that rests against the transmission cover. The corresponding part of a new gasket must then be cut off with a sharp knife, carefully fitted, and glued to the rest of the gasket.
7. Apply a thin coat of sealing compound to the mounting surfaces of the transmission cover. Position the gasket. Put on the cover and center it with tool 786214 until all the bolts have been tightened.

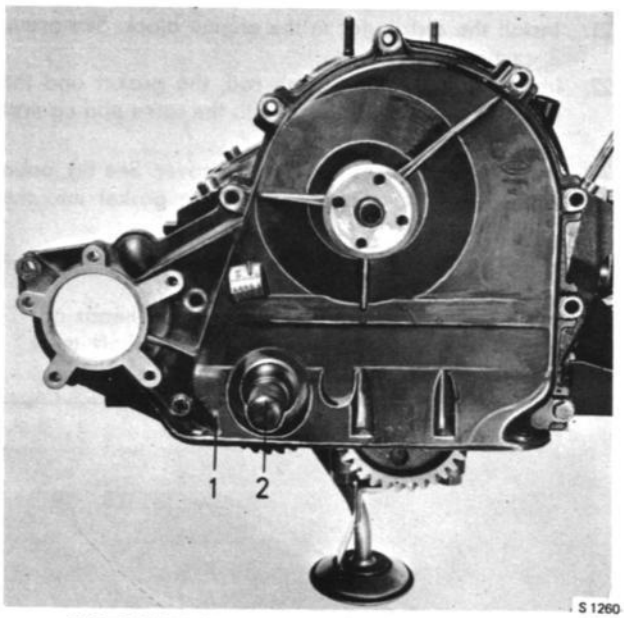

INSTALLATION OF TRANSMISSION COVER

1. Transmission cover
2. Centering arbor 786214

8. Connect the water hoses to the water pump.
9. Lightly oil the pulley shaft. Put on the pulley and tighten it with a bolt and washer.
10. Insert the rubber seal in the groove in the rear main bearing cap.
11. Apply a coat of sealing compound to the two corner joints where the transmission cover, the intermediate plate and the edges of the oil pan meet.

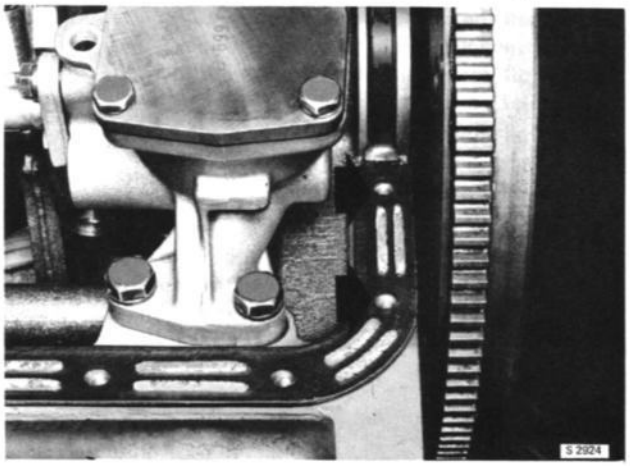

FITTING THE TWO BOLTS WITH RUBBER WASHERS

Position the oil pan gasket on the block and insert the two tabs on the cork gasket under the recesses in the rear bearing cap rubber seal.

12. Install and secure the oil pan. Position the two bolts with the rubber washers at the rear balance shaft bearing. See arrows in the illustration.
13. Lubricate the tappets and their bores with engine oil and install the tappets in the same sequence as they were originally fitted.
14. Install the cylinder head gaskets. The gaskets are marked "Front" and "Top".

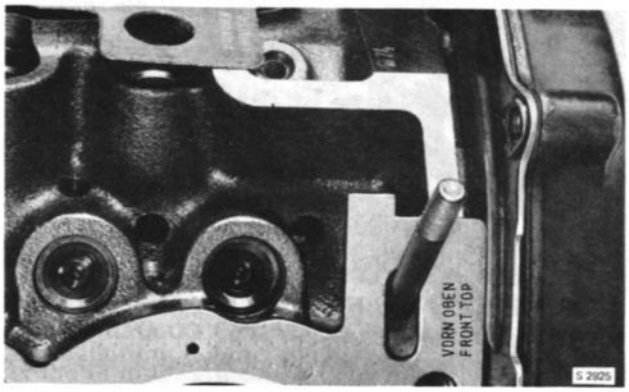

INSTALLATION OF CYLINDER HEAD GASKET

15. Install the complete cylinder heads, insert the bolts and tighten them in the sequence indicated in three stages to the correct torque as per the following table:

	kpm	ft-lb
1.	5.5	40
2.	7.0	50
3.	9.5	68

IMPORTANT

To ensure effective sealing, the bolts must be tightened in three stages to the prescribed torque in the sequence indicated.

NOTE

The outer, rear bolt for the righthand cylinder head is specially adapted for the engine earth cable.

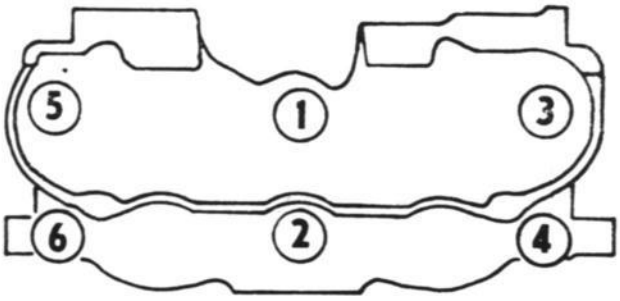

S 1125

TIGHTENING SEQUENCE, CYLINDER HEAD BOLTS

16. Apply sealing compound to the surfaces of the cylinder heads as shown in the figure. Install the induction manifold gasket and make sure that the protruding part of the righthand cylinder head gasket enters the aperture in the induction manifold gasket. See fig. page 215-6.

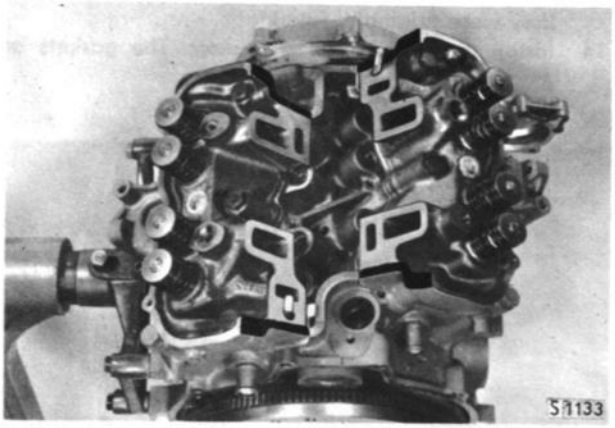

ASSEMBLED CYLINDER HEAD WITH MARKED SURFACES FOR APPLICATION OF SEALING COMPOUND

17. Install the induction manifold. Tighten the screws and nuts with the tightening torque specified in Chapter 0, page 020-5.

> IMPORTANT
>
> To ensure effective sealing, the bolts must be tightened in two stages to the prescribed torque in the sequence indicated.

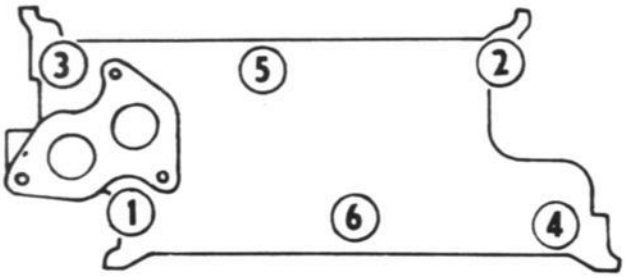

S 2184

TIGHTENING SEQUENCE, INDUCTION MANIFOLD BOLTS

18. Dip the push rod ends in engine oil and install the push rods in their original positions in the tappets.
19. Lubricate the ends of the rocker arms with engine oil and install the oil return plates and rocker arm assemblies. In so doing, align the push rods under the rocker arms and check that the oil return plates are not in contact with the valve springs. Secure the rocker arm assemblies by alternately tightening the two screws.
20. Adjust the valve play. See the section "Valve adjustment".
21. Install the distributor in the engine block. See group 3, section 342.
22. Install the fuel pump push rod, the gasket and the pump. Install the push rod with the same end against the cam as originally.
23. Insert a new gasket in the valve cover. See fig. page 211-2. Press the clamp ends of the gasket into the notches in the cover.

> NOTE
>
> Before the valve covers of the cylinder heads are refitted, the lubrication of the rocker shaft must be checked with the engine running.

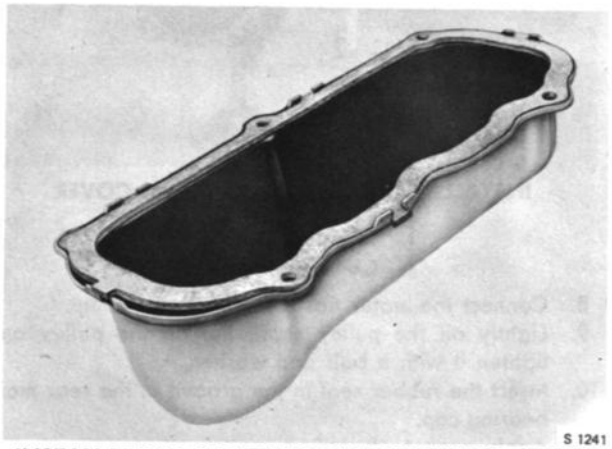

INSTALLATION OF NEW GASKET IN VALVE COVER

24. Install the carburetor and gasket.
25. Reconnect the fuel and vacuum lines.
26. Install the distributor cap and attach the ignition cables.
27. Install the air filter.

> NOTE
>
> Retighten the cylinder head bolts and adjust the valves when the car has been driven for about 1.200 miles (2.000 km).

CRANKSHAFT

Disassembly

1. Install the engine on a work stand.
2. Drain the engine oil, if this has not already been done.
3. To prevent oil sludge and impurities from entering the engine, the oil pan must be removed downwards with the engine in the normal position.
4. Remove the oil pump with its drive shaft.
5. Remove the balance shaft pulley.
6. Disconnect the water hoses from the water pump.
7. Remove the transmission cover.
8. Remove the crankshaft gear bolt. Pull the gear off with tool 786218. See fig.

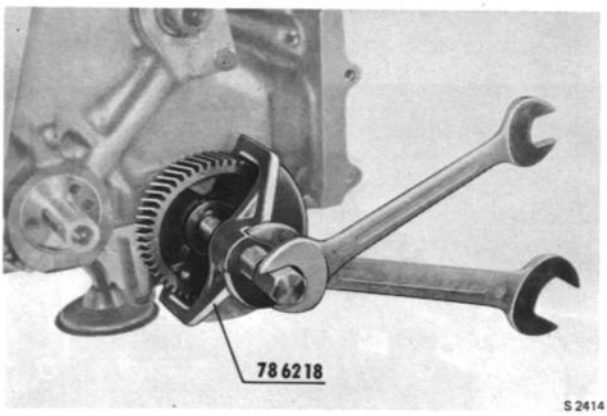

S 2414

REMOVAL OF CRANKSHAFT GEAR

9. Screw off the clutch thrust plate and remove the disc.
10. Remove the flywheel.
11. Back off and remove all crankshaft bearing cap nuts. Remove the bearing caps together with the bearing inserts.
12. Remove the bolts from the main bearing caps. Remove the main bearing caps together with the bearing inserts.
13. Lift the crankshaft carefully out of the block. Slide the oil seal off the crankshaft.
14. Remove the bearing inserts and place them in the correct sequence for reinstallation.
15. Remove residual gasket fragments from all mounting surfaces.

Reassembly

1. Put on the crankshaft gear and secure it to the crankshaft with a bolt and washer.
2. If a new crankshaft or new bearing inserts are installed, check that the correct fitting clearance is obtained. The measuring procedure is described in this section.
3. Coat all bearing inserts with engine oil after having placed them in their bearing positions.

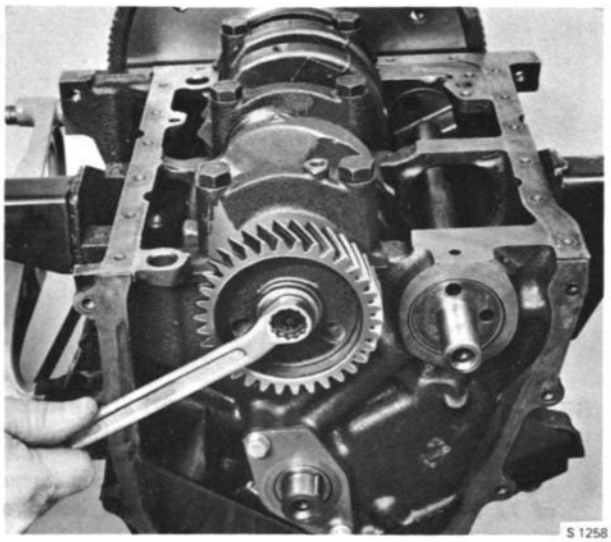

S 1258

INSTALLATION OF CRANKSHAFT GEAR

4. Insert the crankshaft carefully into the engine block on the bearing inserts and make sure that the mark on the gear takes up the correct position in relation to the camshaft gear and the balance shaft gear. See fig.
5. Put on the main bearing caps with inserted and oiled bearing inserts. Apply a thin coat of sealing compound to the rear part of the contact surface of the rear bearing cap.

> NOTE
>
> The arrows on the center and front main bearing caps must point to the front.

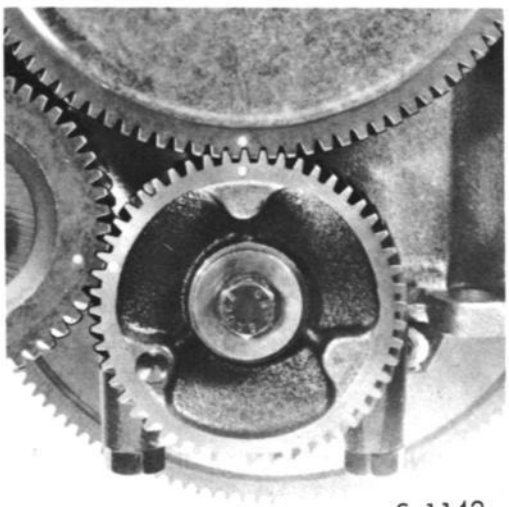

S 1142

INSTALLATION MARKS, TRANSMISSION GEAR

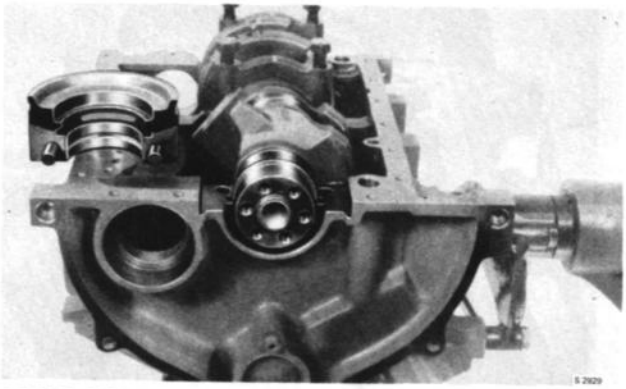

REAR BEARING CAPS WITH MARKED SURFACES FOR APPLICATION OF SEALING COMPOUND

6. Tighten the front and rear bearing caps to a torque of 72 ft-lb (10.0 kpm). Finger-tighten the bolts for the center bearing cap.

> NOTE
>
> Do not confuse the screws for cylinder heads and main bearings. These have the same diameter, but the screws for the main bearings are approx. 0.4 in. (10 mm) longer than those for the cylinder heads. As from engine No. 74900, the cylinder head screws have been lengthened approx. 0.4 in. (10 mm) and consequently there is no danger of confusion.

7. Press the crankshaft forwards and pry the axial (center) bearing cap to the rear. Then, tighten the cap bolts to a torque of 72 ft-lb (10 kpm) while holding the crankshaft forward. (This is necessary to make both halves of the bearing inserts equally ready to bear axially.) See fig.

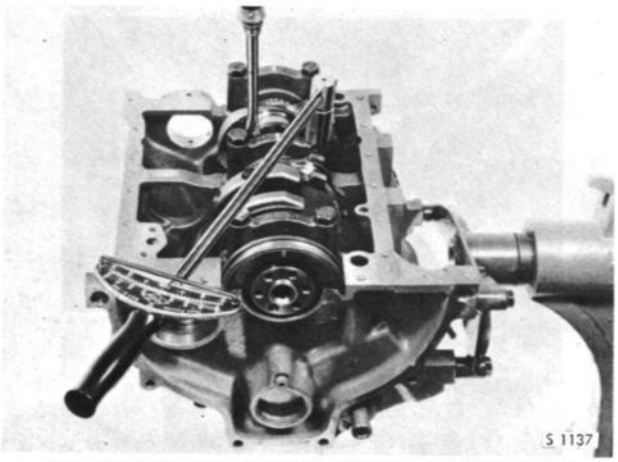

TORQUING THE CENTER MAIN BEARING CAP

8. Check that the crankshaft runs easily in the bearing seats.
9. Pull the connecting rods up against the crank webs on the shaft. Put on the bearing caps with inserted and oiled bearing inserts. Make sure that the marks coincide. Tighten the new bolts to the prescribed torque.

> NOTE
>
> Fit new connecting rod bolts every time the engine has been disassembled.

10. Apply a thin coat of sealing compound to the transmission cover gasket surface and to the intermediate plate. Position the gasket. Install the transmission cover and center it with tool 786214 until all bolts have been tightened. See fig.

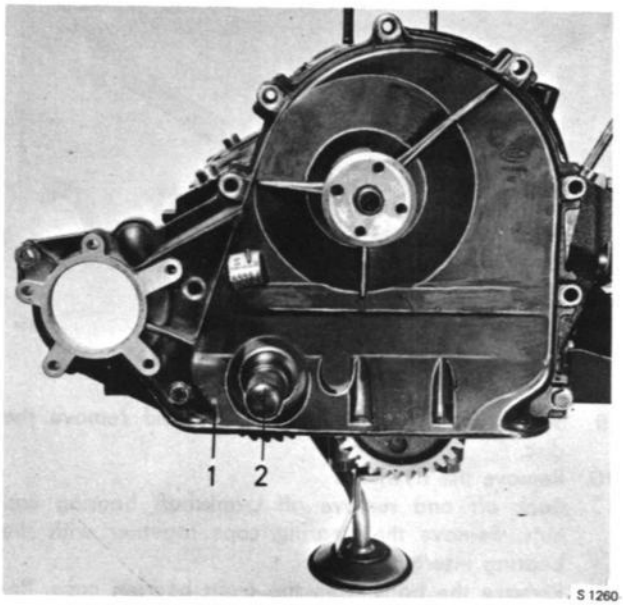

INSTALLATION OF TRANSMISSION COVER

1. Transmission cover
2. Centering arbor 786214

11. Coat the inner diameter of the new crankshaft seal with engine oil and slide the seal onto tool 786217. Drive it into the main bearing until it bottoms out. See fig.

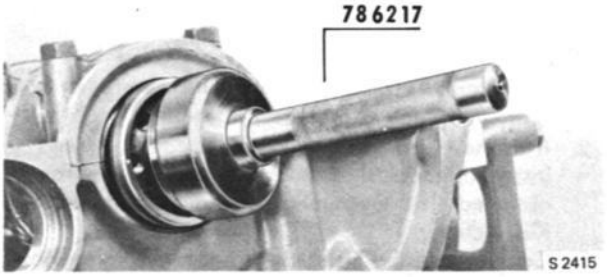

INSTALLATION OF REAR CRANKSHAFT SEAL

12. Coat the two wedge-shaped seals with sealing compound and press them into the rear main bearing cap with a blunt screwdriver. See fig.

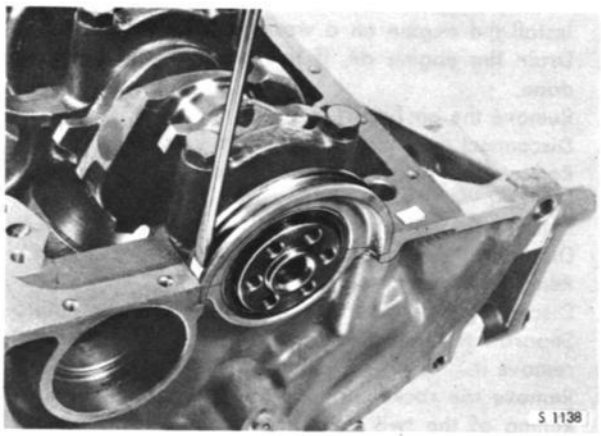

INSTALLATION OF SEALING KEYS

> NOTE
>
> The domed side of the seal must be turned to face the main bearing cap.

13. Clean the crankshaft flange and the flywheel. Install the flywheel, using new bolts.
14. Install the clutch disc and pressure plate. Center the disc with tool 784064.
15. Install the oil pump and its gasket. Tighten the actual pump bolts first and then the suction line bolt.
16. Insert the rubber seal in the groove in the rear main bearing cap.
17. Apply a coat of sealing compound to the two corner joints where the transmission cover, the intermediate plate and the edges of the oil pan meet. Position the oil pan gasket on the block, and insert the two tabs on the cork gasket under the recesses in the rear bearing cap rubber seal.
18. Install and secure the oil pan. Position the two bolts with the rubber washers at the rear balance shaft bearing. See arrows in the figure.

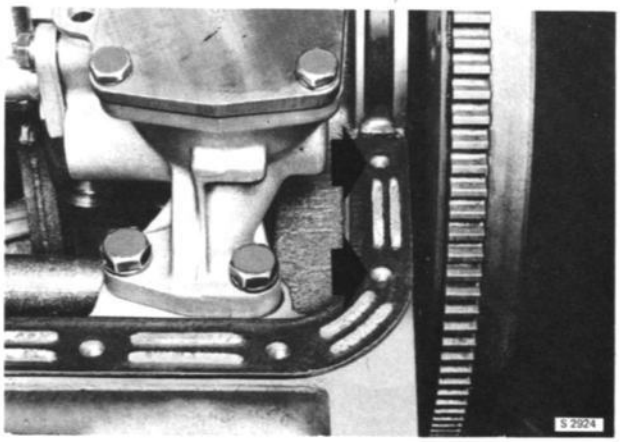

FITTING THE TWO BOLTS WITH RUBBER WASHERS

19. Put on the pulley and secure it with the bolt.

REPLACEMENT OF CRANKSHAFT SEAL (Engine removed)

1. Remove the clutch.
2. Remove the flywheel.
3. Pull off the crankshaft seal with tool 786216. First, retract the tool pressure spindle, screw it on with the conical, threaded part in the seal and then advance the pressure spindle to withdraw the seal. See fig.

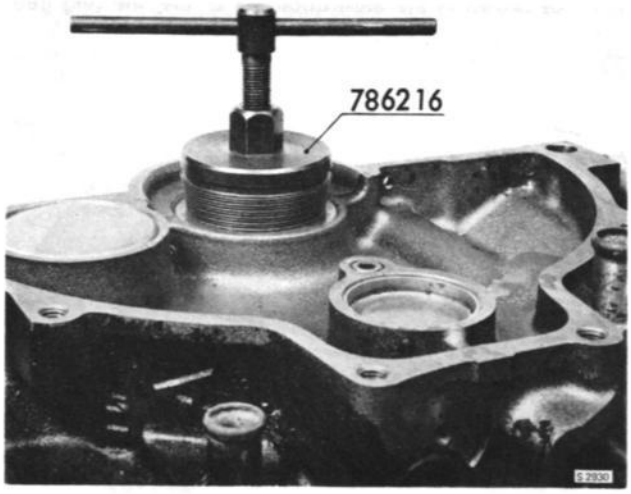

REMOVAL OF REAR CRANKSHAFT SEAL

4. Lubricate the inner diameter of the new crankshaft seal with engine oil and push the seal onto tool 786217. Drive in into the main bearing until it bottoms out. See fig. page 216-2.
5. Clean the crankshaft flange and the flywheel. Install the flywheel, using new bolts.
6. Install the disc and the pressure plate. Center the disc with tool 784064.

Replacement of disc-shaft bushing

REPLACEMENT OF DISC-SHAFT BUSHING

1. Fill the bushing with grease.
2. Introduce centering tool 839003 into bushing and tap gently with a plastic mallet in order to drive out the bushing. If necessary, gradually add more grease as the bushing is being driven out.
3. Remove all grease from the crankshaft and from the tool. Take care so that no grease adheres to the friction surface of the flywheel.
4. Fit a new bushing, using centering tool 839003.

Replacement of ring gear (with flywheel removed)

1. Make center pops in the ring gear and drill two holes with a diameter of 0.28 or 0.32 in. (7 or 8 mm) as shown in the illustration. As a rule, the ring gear splits off during drilling, but otherwise it can easily be knocked off with the aid of a chisel.

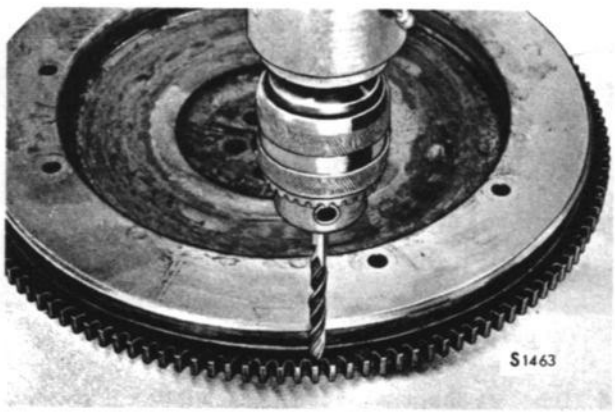

SPLITTING OF RING GEAR BY DRILLING

> NOTE
>
> Make sure that the drill passes through the ring gear only and not into the flywheel.

2. Place the new ring gear on a plate with a thickness of 0.08—0.12 in. (2—3 mm) and heat it evenly with a welding flame from below. Test frequently by placing the ring gear on the flywheel with pliers until it drops down onto the flywheel lug.

> NOTE
>
> The ring gear is induction-hardened and loses its hardness if heated to temperatures above 554°F (290°C).

DISASSEMBLY AND REASSEMBLY OF PISTON WITH CONNECTING ROD

Disassembly

1. Install the engine on a work stand.
2. Drain the engine oil, if this has not already been done.
3. Remove the air filter.
4. Disconnect the distributor vacuum line.
5. Remove the distributor, distributor cap and ignition cables.
6. Remove the valve covers.
7. Disconnect the fuel line.
8. Remove the carburetor.
9. Disconnect the induction manifold bolts and nuts. Separate the induction manifold from the gasket and remove it.
10. Remove the rocker arm assembly by alternate slackening of the two bolts and remove the oil return plate.
11. Remove the push rods and keep them in the correct sequence.
12. Remove the cylinder head.
13. Take away the cylinder head gasket.
14. Remove the tappets with the aid of a bent wire and keep them in the correct order.
15. Carefully remove any ridges or carbon deposits from the upper end of the cylinder bore.
16. To prevent oil sludge and impurities from entering the engine, the oil pan must be removed with the engine in the normal position. The engine must not be turned over until this has been done.
17. Remove the oil pump.
18. Remove the crankshaft bearing cap nuts. Take off the caps and bearing inserts and press the piston out with the handle of a hammer. Protect the crankshaft bearing necks from coming into contact with the connecting rod bearing cap screws.

> NOTE
>
> Note the marks on piston, connecting rod and bearing cap.

MARKING OF PISTONS AND CONNECTING RODS

NOTE

Piston and connecting rod with piston pin form an integral unit and must not be disassembled further.

19. The two upper piston rings can now be removed from the piston with piston-ring pliers. The center spring and segment in the tripartite oil control ring can be removed by hand. See fig.

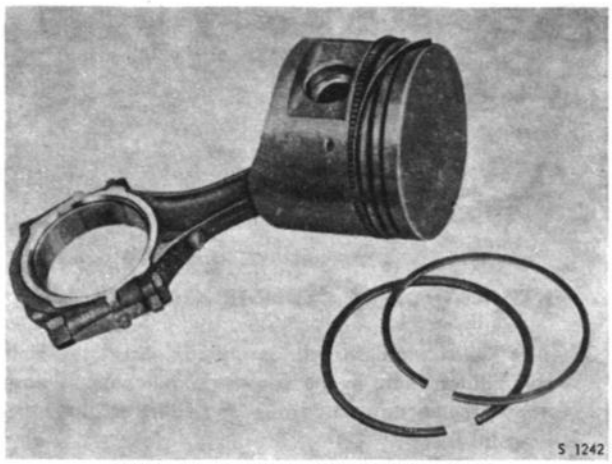

PISTON WITH CONNECTING ROD

Reassembly

1. If necessary, clean the piston ring grooves (using a piece of a worn piston ring). Lubricate pistons, rings and cylinder bores with engine oil. Place the piston rings in the following manner:
   The oil control ring center spring gap 180° from the mark on the top of the piston; the oil segments with the gaps staggered 1 in. (25 mm) on either side of the center spring gap; the lower compression ring gap 150° from one side of the center spring gap and the upper compression ring gap 150° from the other side of the center spring gap. Installation of the piston rings as above is essential for optimum sealing and low oil consumption.
2. Fit new connecting rod bolts.

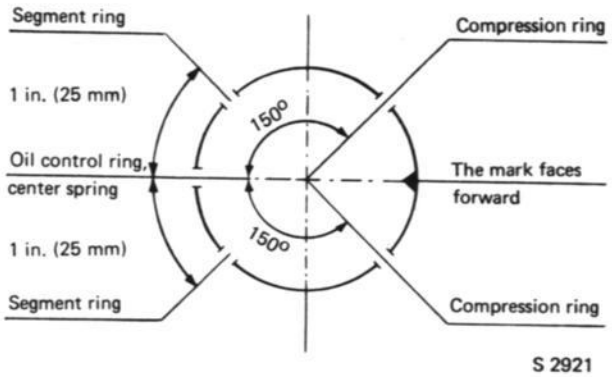

FITTING PISTON RING GAP

NOTE

Fit new connecting rod bolts every time the crankshaft has been disassembled.

3. Lubricate the piston and cylinder with a thin coat of engine oil.
4. Install the piston together with the connecting rod using tool 786228 by carefully pressing the piston with the handle of a hammer. Make sure that the mark on the top of the piston faces forwards. See fig. Concerning piston- and piston ring clearance, see pages 210-5 and 210-6.

PISTON ASSEMBLY

5. If new bearings are installed check that the correct fitting clearance is obtained. The measuring procedure is described in this section.
6. Install the bearing inserts dry in the connecting rods and then coat them with engine oil. Put on the bearing caps and tighten to the prescribed torque.
7. Slide the oil pump onto its drive shaft and install it with the gasket. Tighten the actual pump bolts first and then the suction line bolt.
8. Insert the rubber seal in the groove in the rear main bearing cap.

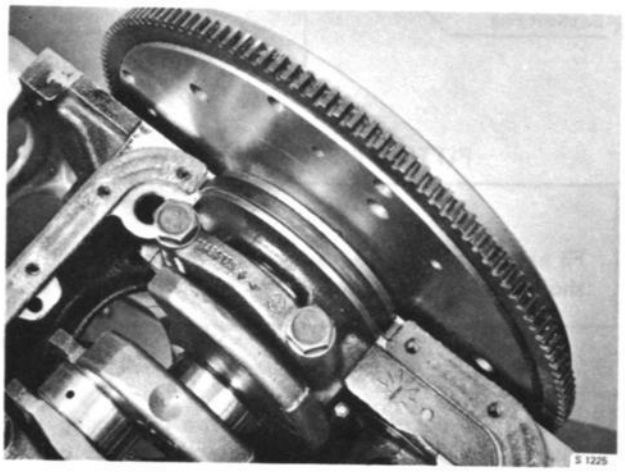

INSTALLATION OF OIL PAN GASKET

9. Apply a coat of sealing compound to the two corner joints where the transmission cover, the intermediate plate and the edges of the oil pan meet. Position the oil pan gasket on the block and insert the two tabs on the cork gasket under the recesses in the rear bearing cap rubber seal.
10. Install and secure the oil pan. Position the two bolts with the rubber washers at the rear balance shaft bearing. See arrows in the figure.

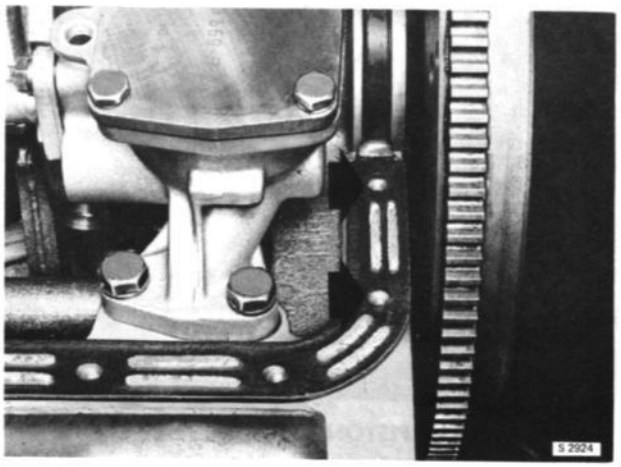

FITTING THE TWO BOLTS WITH RUBBER WASHERS

11. Lubricate the tappets and their bores with engine oil and install the tappets in the same sequence as they were originally fitted.
12. Install the cylinder head gaskets. The gaskets are marked "Front" and "Top".

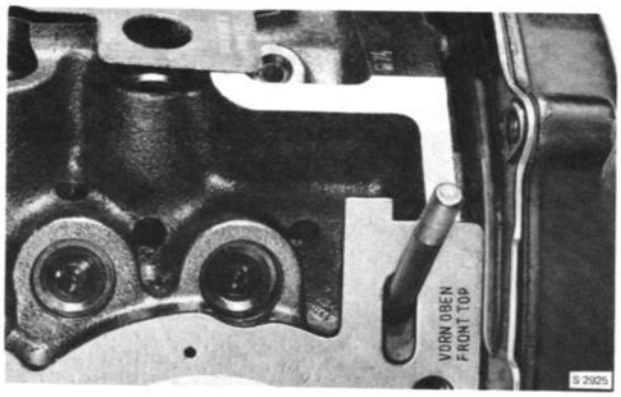

INSTALLATION OF CYLINDER HEAD GASKET

13. Install the complete cylinder heads, insert the bolts and tighten them in the sequence indicated in three stages to the correct torque according to the following table:

	kpm	ft-lb
1.	5.5	40
2.	7.0	50
3.	9.5	68

IMPORTANT

To ensure effective sealing, the bolts must be tightened in three stages to the prescribed torque in the sequence indicated.

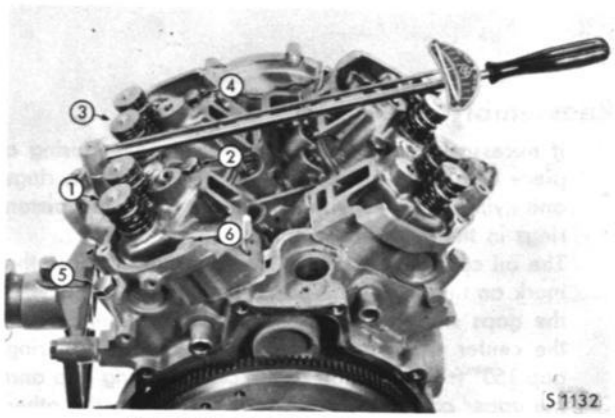

TORQUING THE CYLINDER HEAD

NOTE

The outer, rear bolt for the righthand cylinder head is specially adapted for the engine earth cable.

14. Apply sealing compound to the surfaces of the cylinder heads as shown in the figure. Install the induction manifold gasket, and make sure that the protruding part of the righthand cylinder head gasket enters the aperture in the induction manifold gasket.

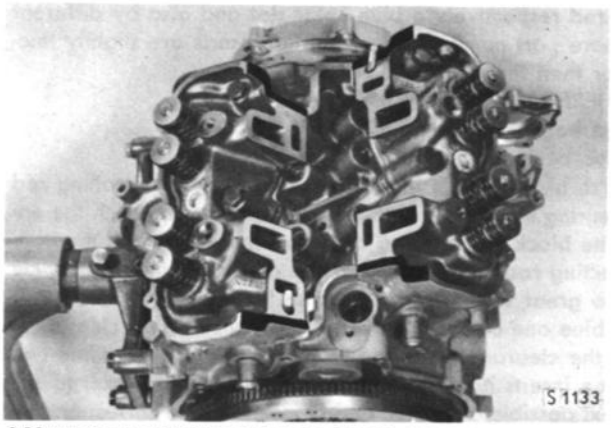

ASSEMBLED CYLINDER HEAD WITH MARKED SURFACES FOR APPLICATION OF SEALING COMPOUND

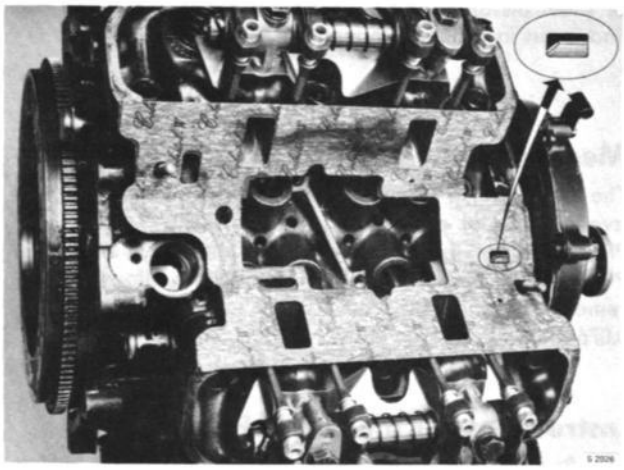

INSTALLATION OF INDUCTION MANIFOLD GASKET

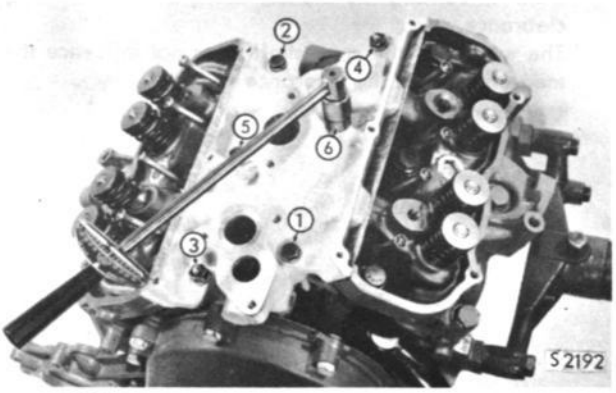

TORQING THE INDUCTION MANIFOLD

15. Install the induction manifold. Tighten the screws and nuts with the tightening torque specified in chapter 0, page 020-5.

IMPORTANT

To ensure effective sealing, the bolts must be tightened in two stages to the prescribed torque in the sequence indicated.

16. Dip the push rod ends in engine oil and install the push rods in their original positions in the tappets.
17. Lubricate the ends of the rocker arms with engine oil and install the oil return plate and the rocker arm assembly. In so doing, align the push rods under the rocker arms. Check that the oil return plates are not in contact with the valve springs. Secure the rocker arm assembly by alternately tightening the two screws.
18. Adjust the valve play. See the section "Valve adjustment".
19. Install the distributor and secure it with the clamp. Adjust the ignition setting.
20. Insert a new gasket in the valve cover. See fig.

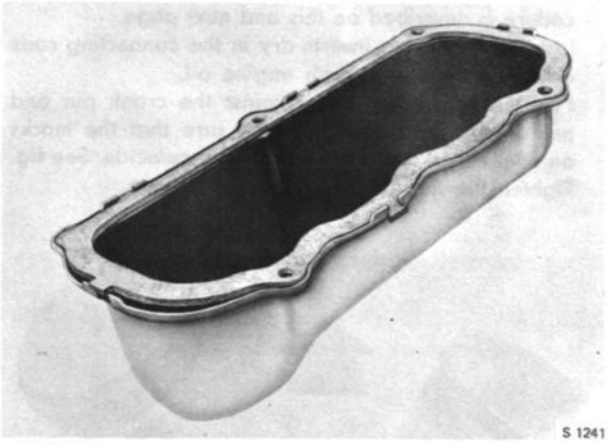

INSTALLATION OF NEW GASKET IN VALVE COVER

Press the clamp ends of the gasket into the notches in the cover.

NOTE

Before the valve covers of the cylinder heads are refitted, the lubrication of the rocker shaft must be checked with the engine running.

21. Reinstall the distributor cap and attach the ignition cables.
22. Reinstall the carburetor, together with its gasket.
23. Reconnect the fuel and vacuum lines.

NOTE

Retighten the cylinder head bolts and adjust the valves when the car has been driven for about 1.200 miles (2.000 km).

CRANKSHAFT BEARING INSERTS

Disassembly

1. Install the engine on a work stand.
2. To prevent oil sludge and impurities from entering the engine, the oil pan must be removed downwards with the engine in the normal position.
3. Remove the oil pump with its drive shaft.
4. Remove the crankshaft bearing cap nuts and take off the bearing caps and bearing inserts.
5. Press the connecting rod away from the crankshaft and remove the bearing insert.

Reassembly

1. Fit new connecting rod bolts.

> NOTE
>
> Fit new connecting rod bolts every time the crankshaft has been disassembled.

2. To ensure that the fitting clearance is correct, the clearance should be measured. The measuring procedure is described on this and next page.
3. Install the bearing inserts dry in the connecting rods and then coat them with engine oil.
4. Pull the connecting rod against the crank pin and put on the bearing cap. Make sure that the marks on connecting rod and bearing cap coincide. See fig. Tighten the nuts to the prescribed torque.

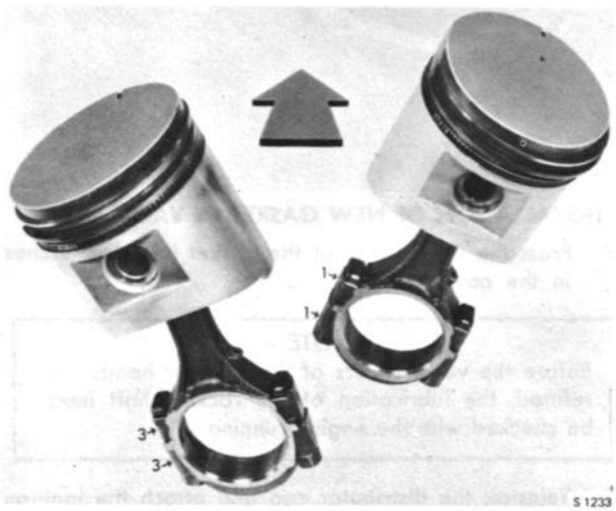

MARKING OF PISTONS AND CONNECTING RODS

5. Slide the oil pump onto its drive shaft and install it with the gasket. Tighten the two bolts for the actual pump first and then the suction line bolt.
6. Insert the rubber seal in the groove in the rear main bearing cap.
7. If a new crankshaft or new bearing inserts have been installed, check that the correct fitting clearance is obtained. The measuring procedure is described below.

SELECTING THE CRANKSHAFT MAIN BEARING AND CONNECTING ROD BEARING INSERTS

Standard bearing inserts are supplied in two different thicknesses. They are distinguishable from each other by a red respectively a blue color dot and also by different spare part numbers. Blue bearing inserts are slightly thicker than the red ones.
THEREFORE, NOTE:
red bearing inserts INCREASE
blue bearing inserts DECREASE the clearance.
First, try to obtain the correct clearance by installing red bearing inserts, regardless of the color with which the engine block, the bearing caps, the crankshaft and the connecting rods are marked. If the clearance should become too great with two red bearing inserts, install a red and a blue one or two blue ones to obtain a lesser clearance. If the clearance is found to be excessive even when two blue inserts have been fitted, grind the crankshaft to the next possible undersize and fit inserts of the corresponding undersize. See Chapter 0, page 020-2.
On no account may the bearing caps be ground or sheet metal strips be positioned between bearing cap and insert in order to change the clearance.

Measuring the clearance

The clearance is meausred with Plastigage. Plastigage is available under spare part number 786050.
Plastigage is supplied in three different thicknesses. Type PG-1 (green) must be used, since this type allows measurement of clearances from 0.00098 to 0.00299 in. (0.025—0.076 mm).

Instructions for the use of Plastigage

1. Position the engine with the cylinder head facing downwards to prevent the weight of the crankshaft from influencing the measurement of main bearing clearance.
   The weight of the crankshaft does not influence the measurement of the clearance.

2. Make sure that the parts to be measured are free of oil and dirt. Install a dry bearing insert in the bearing cap and position a strip of Plastigage in the insert about 0.236 in. (6 mm) off center (see sketch).

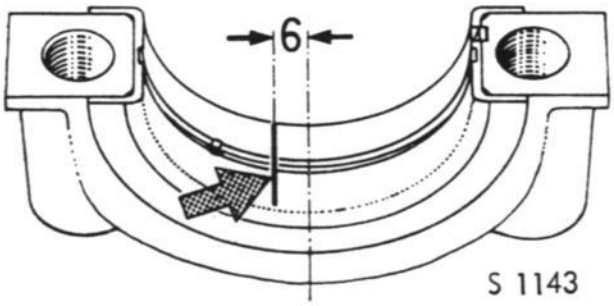

MEASURING PLACE FOR PLASTIGAGE

3. Make sure that the crankshaft is shortly behind the lower dead center (about 30°). With the crankshaft in this position, install the bearing cap with insert and Plastigage and tighten the bearing cap nuts to the prescribed torque.

> NOTE
>
> Do not turn the crankshaft during the measuring procedure. When measuring the connecting rod bearing clearance, also make sure that the connecting rod is not moved.

4. Remove the bearing cap. The Plastigage strip will be found pressed in the bearing cap or on the crankshaft journal.

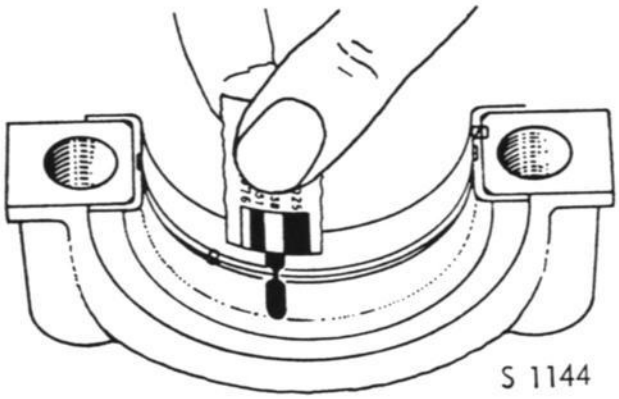

MEASURING OF FLAT-PRESSED PLASTIGAGE STRIP

5. Measure the width of the flat-pressed Plastigage strip by means of the scale printed on the Plastigage packing and read off the clearance. One side of the packing gives the reading in mm and the other side in thousand of an inch.

Measure the Plastigage at its widest point but do not touch it with the fingers.

CONICITY OF A CRANKSHAFT JOURNAL

Conicity of a crankshaft journal exists if one end of the flat-pressed Plastigage strip is wider than the other.

OVALITY OF A CRANKSHAFT JOURNAL

Having completed the above measurement, another measurement must be undertaken after having turned the crankshaft through 90°. The difference between the two measurements indicates the ovality of the crankshaft journal.

OIL PAN, REMOVAL AND INSTALLATION

Removal

1. Install the engine on a work stand.
2. To prevent oil sludge and impurities from entering the engine, the oil pan must be removed downwards with the engine in the normal position.

Installation

1. Insert the rubber seal in the groove in the rear main bearing cap.

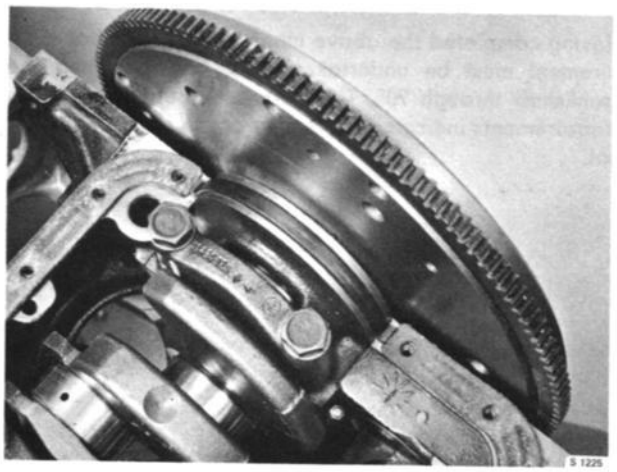

INSTALLATION OF OIL PAN GASKET

2. Apply a coat of sealing compound to the two corner joints where the transmission cover, the intermediate plate and the edges of the oil pan meet. Position the oil pan gasket on the block and insert the two tabs on the cork gasket under the recesses in the rear bearing cap rubber seal.
3. Install and secure the oil pan. Position the two bolts with the rubber washers at the rear balance shaft bearing. See arrows in the figure.

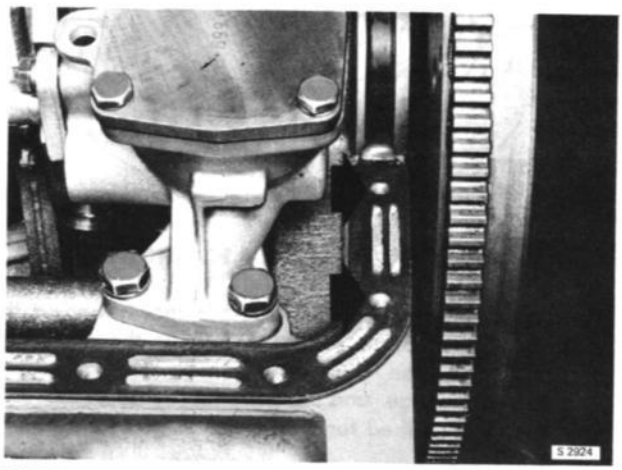

FITTING THE TWO BOLTS WITH RUBBER WASHERS

OIL PUMP, REMOVAL AND INSTALLATION

Removal

1. Install the engine on a work stand.
2. To prevent oil sludge and impurities from entering the engine, the oil pan must be removed downwards with the engine in the normal position.
3. Remove the two bolts in the oil pump flange and the retaining screw for the oil pump suction line. Remove the oil pump and its drive shaft.

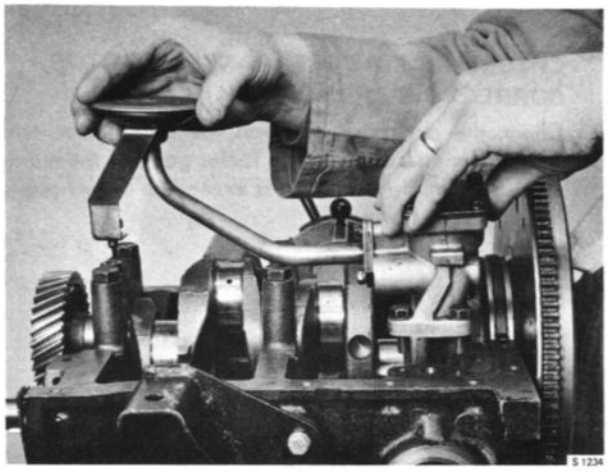

REMOVAL OF OIL PUMP

Installation

1. Pass the drive shaft into the engine block with the pointed end facing the distributor.
   NOTE! The holding ring must be located on the drive shaft as shown.

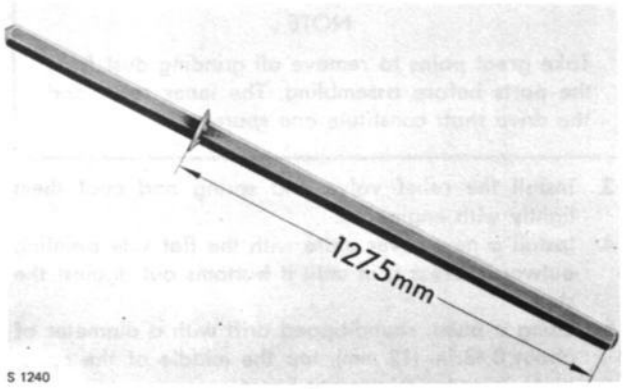

DRIVE SHAFT WITH HOLDER RING

2. Push the oil pump onto the drive shaft and install it with the gasket. Tighten the actual pump bolts first and then the suction line bolt.
3. Apply a coat of sealing compound to the two corner joints where the transmission cover, the intermediate plate and the edges of the oil pan meet. Position the oil pan gasket on the block and insert the two tabs on the cork gasket under the recesses in the rear bearing cap rubber seal.
4. Install and secure the oil pan. Position the two bolts with the rubber washers at the rear balance shaft bearing. See arrows in the figure.

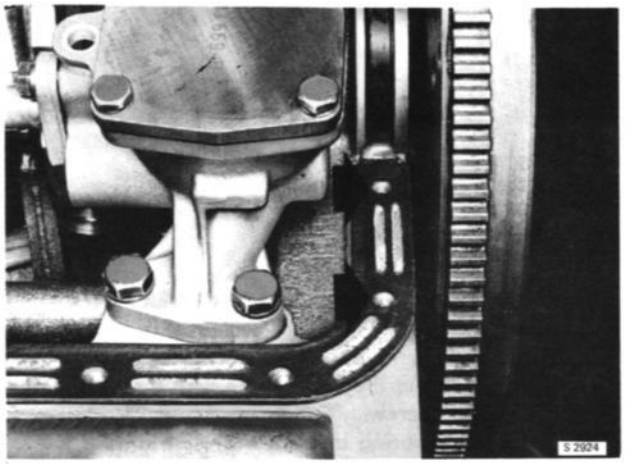

FITTING THE TWO BOLTS WITH RUBBER WASHERS

OVERHAULING THE OIL PUMP WITH A REPAIR KIT

Disassembly

1. Unscrew the suction line from the oil pump.
2. Unscrew the oil pump cover. Remove the inner and outer rotor from the oil pump housing.

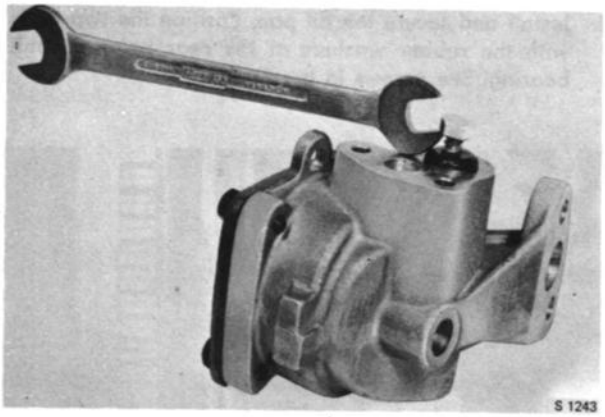

REMOVAL OF RELIEF VALVE COVER PLATE

3. Make a hole in the relief valve cover plate with a drift. Pull out the cover plate with a suitably sized selftapping screw.
4. Remove the spring and the oil relief valve.

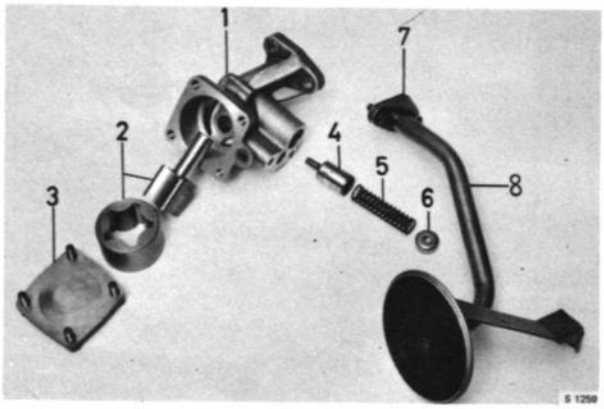

OIL PUMP, DISMANTED

1. Housing
2. Inner and outer rotor (rotor with birotor)
3. Cover
4. Relief valve
5. Spring
6. Cover plate
7. Gasket
8. Suction line

Reassembly

1. Insert a new outer and inner rotor in the pump housing. Check the clearance between the sealing surface of the pump housing and the front sides of the outer and inner rotor with a ruler and a feeler gage. If necessary, grind the sealing surface of the oil pump housing or the rotor sides with a fine emery cloth on a face plate.

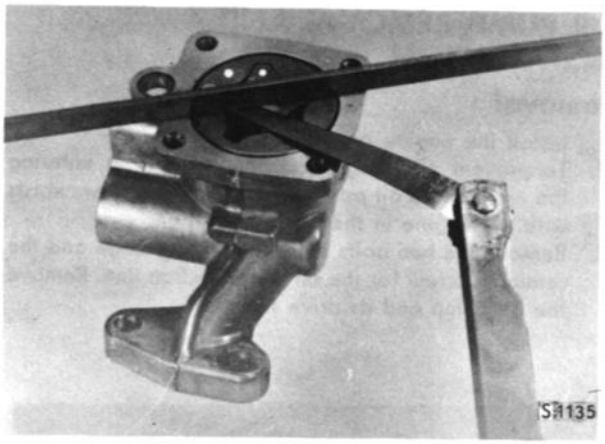

CHECKING AXIAL CLEARANCE OF ROTOR, CORRECT CLEARANCE 0,004 IN. (0,1 MM)

2. Check the clearance between the outer rotor and the oil pump housing with a feeler gage. If the maximum permissible clearance is exceeded, a new pump housing must be used.

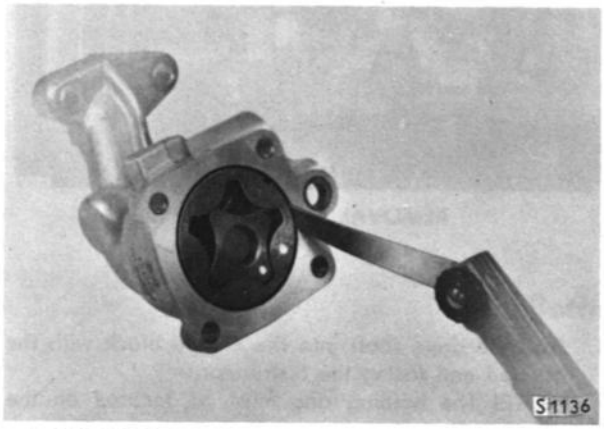

CHECKING RADIAL CLEARANCE OF ROTOR, CORRECT CLEARANCE 0,012 IN. (0,3 MM)

> NOTE
>
> Take great pains to remove all grinding dust from the parts before assembling. The inner rotor and the drive shaft constitute one spare part.

3. Install the relief valve and spring and coat them lightly with engine oil.
4. Install a new cover plate with the flat side pointing outwards. Press it in until it bottoms out against the stop.
5. Using a blunt, round-tipped drift with a diameter of about 0.48 in. (12 mm), tap the middle of the cover plate in order to press it home.
6. Install the rotors and coat them with engine oil. Put the cover on the pump housing and tighten the bolts to the prescribed torque. Insert the drive shaft in the rotor shaft and check that the pump runs easily.
7. Install the suction line with a new gasket to the oil pump housing.

REMOVAL AND INSTALLATION OF OIL FILTER CARTRIDGE

Use tool 786201 to remove the oil filter cartridge. Unscrew the cartridge. The cartridge cannot be cleaned and should therefore be renewed at the prescribed intervals (every 6.000 miles or 10.000 km). Apply a little oil to the rubber gasket on the new cartridge. Screw in the cartridge until the gasket makes contact with the engine block and then tighten half a turn.

> NOTE
>
> Excessive tightening of the cartridge involves a risk of leakage, as the rubber seal may then tilt in its groove.

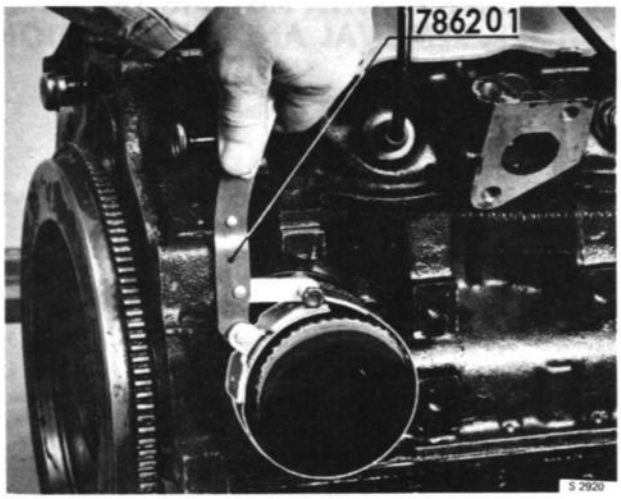

REMOVAL OF OIL FILTER CARTRIDGE

CARBURETOR WITH AUTOMATIC CHOKE, REMOVAL AND INSTALLATION

Removal

1. Drain off some of the cooling water.
2. Remove the air filter.
3. Disconnect the hoses from the automatic choke.
4. Disconnect the throttle control linkage and the vacuum line.
5. Disconnect the fuel line.
6. Remove the carburetor.
7. For 32 PDSIT-4 is furthermore applicable, disconnect the hose from the valve cover. Then it is possible to remove the intermediate flange.
8. Carefully cover the opening in the induction pipe.

Installation

Fit the intermediate flange, with new gaskets. Refers to carburetor 32 PDSIT-4.

1. Install a new gasket, put on the carburetor and tighten it up evenly.
2. Reconnect the fuel and vacuum lines.
3. Reconnect the throttle control.
4. Reconnect the water hoses and tighten the hose clamps.
5. Refill the cooling system and bleed the system.
6. Install the air filter.

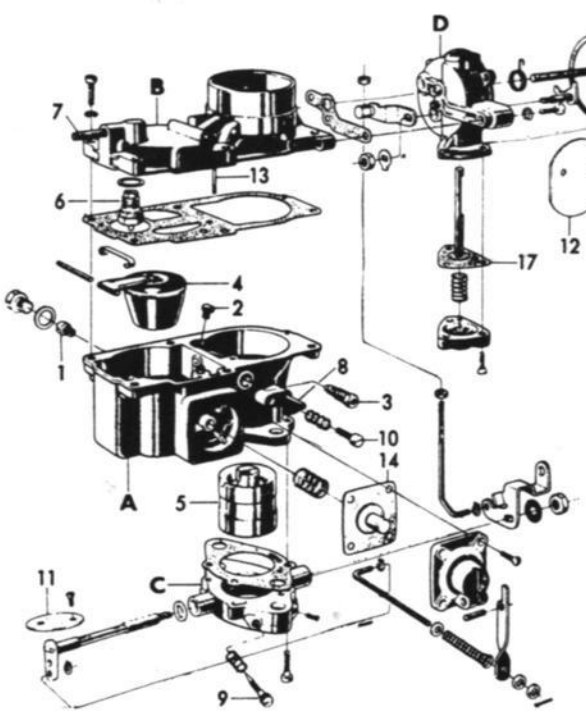

CARBURETOR 28—32 PDSIT-7

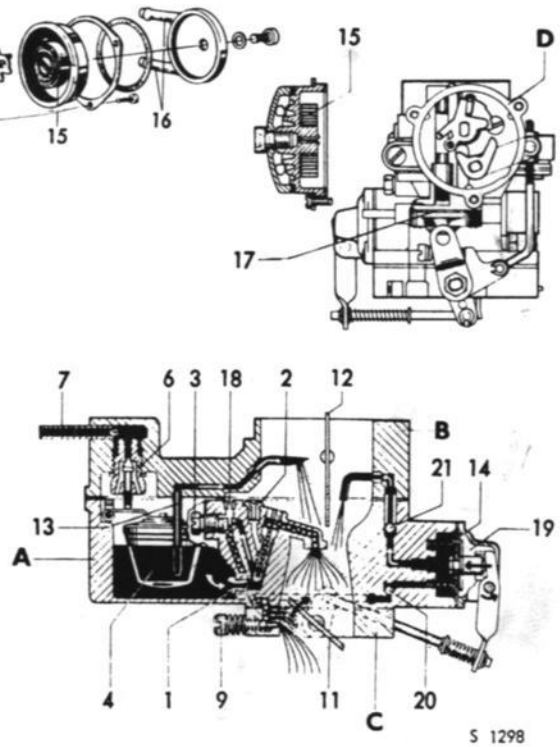

CARBURETOR, PRINCIPLES

1. Main jet
2. Emulsion jet
3. Idling jet, fuel
4. Float
5. Choke tube
6. Float valve
7. Connection, fuel hose
8. Connection, vacuum hose, distributor
9. Air-regulating screw, idling mixture
10. Adjusting screw, idling
11. Throttle flap
12. Choke flap
13. Ascending pipe, additional system (econostat)
14. Diaphragm, acceleration pump
15. Bimetal spring for automatic choke
16. Water connections
17. Diaphragm for vacuum control of automatic choke
18. Idling air jet (drilling)
19. Acceleration pump
20. Inlet valve, acceleration pump
21. Outlet valve, acceleration pump

A. Float chamber
B. Float chamber cover
C. Throttle body assembly
D. Housing, automatic choke

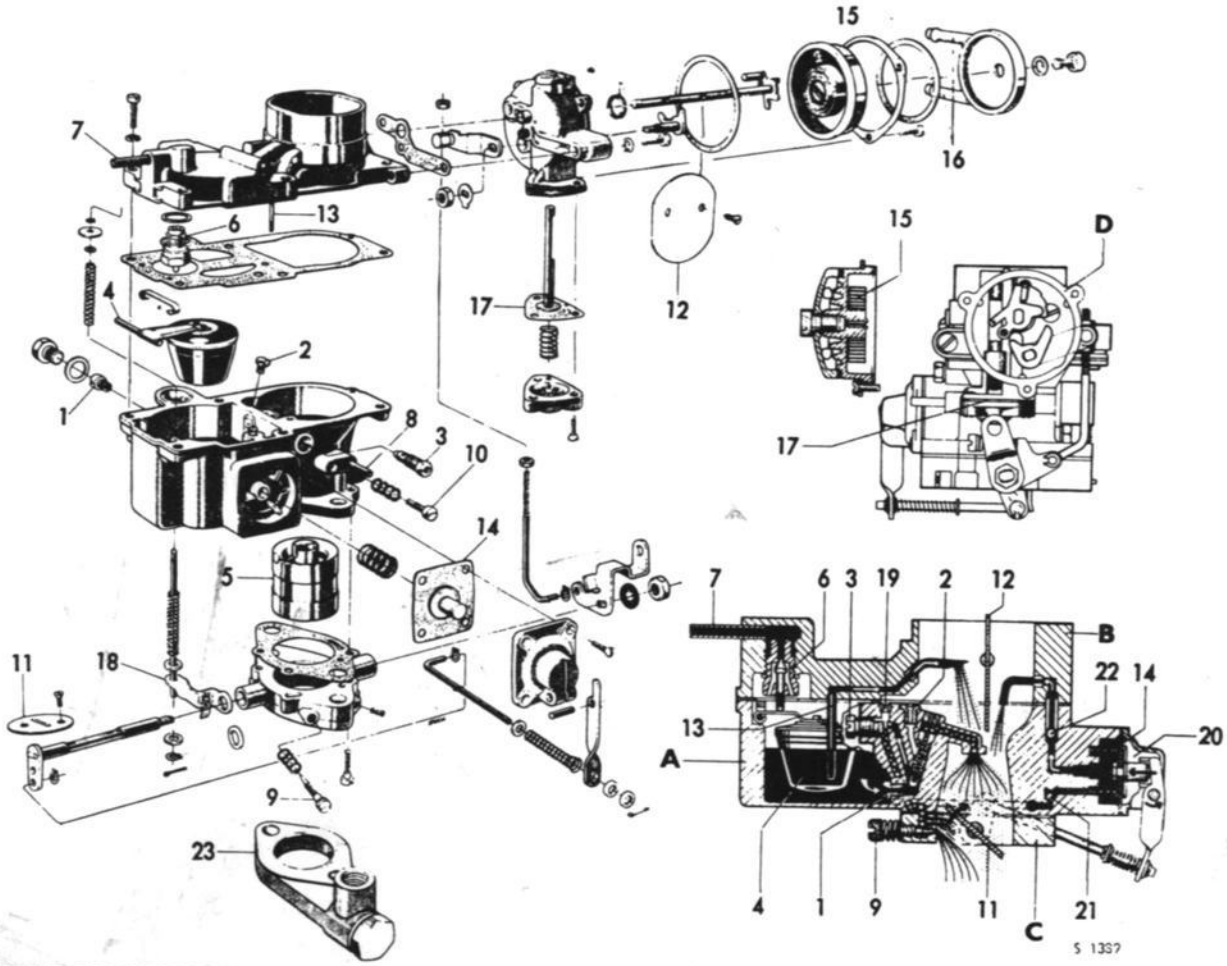

CARBURETOR 32 PDSIT-4

1. Main jet
2. Emulsion jet
3. Idling jet, fuel
4. Float
5. Choke tube
6. Float valve
7. Connection, fuel hose
8. Connection, vacuum hose distributor
9. Air-regulating screw, idling mixture
10. Adjusting screw, idling
11. Throttle flap
12. Choke flap
13. Ascending pipe, additional system (econostat)

CARBURETOR, PRINCIPLES

14. Diaphragm, acceleration pump
15. Bimetal spring, automatic choke
16. Water connections
17. Diaphragm for vacuum control of automatic choke
18. Regulating device, float chamber ventilation
19. Idling air jet (drilling)
20. Acceleration pump
21. Inlet valve, acceleration pump
22. Outlet valve, acceleration pump
23. Intermediate flange

A. Float chamber
B. Float chamber cover
C. Throttle body assembly
D. Housing, automatic choke

Disassembly

1. Remove the retaining ring from the control rod between the automatic choke and the throttle flap. Detach the link from the throttle flap arm.
2. Unscrew and lift off the float chamber cover. Remove the gasket.
3. Screw out the needle valve.
4. Take the float out of the float chamber.
5. Remove the plug from the float chamber and remove the main jet.
6. Pull off the acceleration pump jet (over the acceleration pump).
7. Screw off the idling jet and the emulsion tube jet.
8. Screw off the acceleration pump cover and check the diapragm.
9. Screw off the idling mixture air-regulating screw. For carburetor 32 PDSIT-4 is furthermore applicable:
10. Remove the intermediate flange valve.

Reassembly

NOTE! Clean all passages and jets with a blast of compressed air. Change all parts included in the gasket and repair kit.

1. Install the spring, diaphragm and cover for the acceleration pump.
2. Insert the acceleration pump jet.
3. Screw in the idling jet and the emulsion tube jet.
4. Advance the idling mixture air-regulating screw carefully until it bottoms out then back it off one complete turn.
5. Insert the float.
6. Screw the needle valve with original gasket into the float chamber cover.
7. Install a new cover gasket.
8. Put on the float chamber cover and replace the retaining screws.
9. Pass the rod between the automatic choke and the throttle flap into the throttle flap arm and secure with the retaining ring.
10. Set the flap arm in the semi-open position and at the same time fully close the choke flap with the fingers. Meanwhile, hold the flap arm firmly and make sure that the throttle flap is ajar. The clearance between the flap and the flange must be 0.032 in. (0.8 mm). This can be checked with a wire or drill bit of the same diameter. To adjust the clearance, slacken the nuts on the linkage rod for the fast-idling system and then adjust the rod so that the flap takes up the correct position. Then retighten the rod and lock it in the correct position. For final adjustment, see under "Adjustment of automatic choke".
    For carburetor 32 PDSIT-4 is furthermore applicable: Fit the intermediate flange valve.

CHECKING AND ADJUSTMENT OF FLOAT LEVEL

The fuel level in the float chamber should be measured while the engine is idling and should be nominally 0.59 in. ± 0.04 in. (15 ± 1 mm).
The level is decided by the thickness of the float valve sealing washer. If the level is too high, a thicker washer should be fitted and conversely a thinner washer must be fitted to adjust too low a level. The float level is measured from the top of the float chamber cover to the fuel level. Measuring can appropriately be carried out with a riser tube which is connected at the site of the jet plug in the float chamber.

IDLING ADJUSTMENT

NOTE: The idling speed must be adjusted when the engine has reached the normal working temperature and the headlights switched on. Depending on how far the engine has run, the adjustment should be preceded by a check of the spark plug electrode gap, the ignition setting and the valve play.

1. Reduce the engine speed so that the engine runs as slowly as possible or at max. 500 rpm.
2. Adjust the volume-control screw until the engine runs as smoothly as possible.
3. Switch the headlamps on (high beam) and increase the speed to 800-900 rpm with idle adjusting screw.

ADJUSTMENT OF AUTOMATIC CHOKE

Adjustment of the automatic choke involves two operations, viz. setting of the choke flap and fast-idling adjustment. These two tasks are described below.

ADJUSTMENT OF CHOKE FLAP

Temperature setting

The automatic choke is set for the choke flap to open wide at a temperature of 60—65°C (140—149°F).
The setting mark on the rotatable thermostat housing must coincide with the middle one of the five fixed setting marks comprising the adjustment range. See fig.
Turning clockwise makes the choke open later.

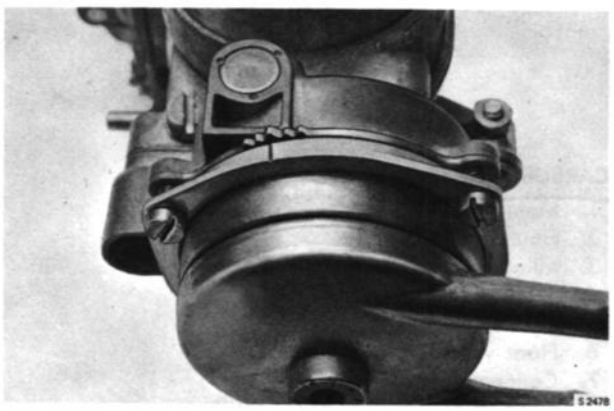

ADJUSTMENT OF THERMOSTAT HOUSING

Adjustment of thermostat housing after removal

1. Hook the bimetal spring onto the driver cam. Turn the thermostat housing the shortest way until the setting marks coincide.
2. Check that the choke flap stretches towards the closed position.

Fast-idling adjustment

1. Remove the air filter.
2. Operate the engine until it reaches normal working temperature. Then switch on the headlights.
3. Connect a tachometer to the engine.
4. Adjust the engine to the correct idling speed, i.e. 800—900 rpm.
5. Close the choke flap a little, in order to make it contact the ratchel wheel in the starting automatics. Hold the choke flap in this position, and keep pressing it towards the ratchel wheel.
6. Open the throttle flap cautiously, enough to allow the choke flap to move to the next position. First release the throttle flap cautiosly, and then the choke flap, The step which serves to increase the idling speed, is now in the first position (first step) of the ratchel wheel.
7. The throttle control must not be touched at this stage, as the ratchet wheel would then revert to the neutral position. For safety's sake, the control rod should be pushed up hard with the fingers.
8. When the throttle flap is in this position, the engine speed should be between 1200—1300 rpm. Adjust the length of the control rod.
   To increase the speed = lengthen the rod
   To reduce the speed = shorten the rod

> NOTE:
> After having performed this adjustment, check that the control rod does not jam in the throttle control lever owing to twisting during tightening of the two adjusting nuts.

9. In order to check the good functioning of all stages of the fast-idling (see page 200—8), check the number of revolutions of the third step. Same shall be 2600—3000 rpm.
10. Recheck the idling speed and adjust if necessary.
11. Disconnect the tachometer and install the air filter. In principle, the above adjustments shall be performed only if the engine is difficult to start at low temperatures and when a check has shown that there are not other faults in the system.

CARBURETOR WITH AUTOMATIC CHOKE AS FROM MODEL 1969

Removal and installation

Removal

1. Remove the air claner.
2. Detach the water hoses from the automatic choke.
3. Remove the throttle control.
4. Detach fuel- and vacuum hoses.
5. Remove the carburetor.
6. Cover the orifice of the suction pipe.

INSTALLATION

1. Fit new gaskets beneath the intermediate flange and carburetor.
   NOTE! Turn the face marked "Oben" upward.

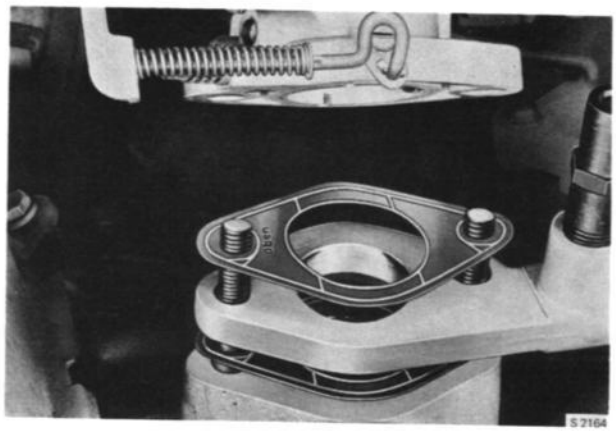

LOCATION OF FITTED GASKET

> NOTE!
> A special gasket is required for this carburetor, and must not be mixed up with the gasket for the Solex carburetor.

2. Refit fuel- and vacuum hoses.
3. Refit the throttle control.
4. Refit the water hoses.
5. Refit the air cleaner.

DISASSEMBLY AND REASSEMBLY

Disassembly

1. Remove the three bolts and detach the thermostatic spring housing.

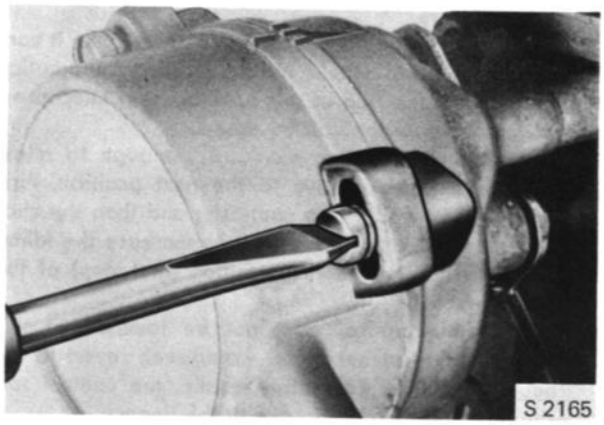

REMOVAL OF THERMOSTATIC SPRING HOUSING BOLTS

2. Unscrew the step cam from the throttle body.
3. Unscrew the bolts retaining the float chamber cover, and lift the cover off. Collect the spring of the float chamber cover. Remove gasket. By holding the float chamber upside down, remove the ball and the weight from the accelerating fuel channel.

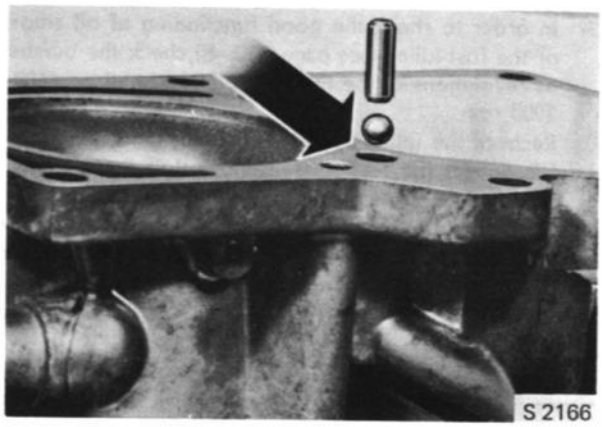

BALL AND WEIGHT, ACCELERATING PUMP FUEL CHANNEL

4. Unscrew the bolts in the accelerating pump cover. Remove cover, diaphragm and spring.
5. Remove accelerating pump rod from the lever of the throttle valve shaft. Remove the lever.
6. Remove idle mixture control screw, and idle adjusting screw as well. Collect the springs.
7. Remove throttle valve.

8. Remove — by using a contact file — the possible burrs from the threaded bores in the throttle valve shaft. Only then pull out the shaft.
9. Remove the float. Unscrew float needle valve.
10. Unscrew main jet.
11. Unscrew the automatic choke housing from the carburetor.
12. Pull out the pins of the air cleaner mounting yoke. Remove yoke.
13. Remove choke plate.
14. Remove — by using a contact file — the possible burrs from the threaded bores in the choke plate shaft. Only then pull out the shaft.

Reassembly

Clean the carburetor. Clean with compressed air all channels, passages and jets. Renew gaskets and possibly defective parts.

1. Mount the throttle valve shaft in the throttle body. Fit the accelerating pump lever on the throttle valve shaft, turn the side marked 0 upwards.
2. Fit the throttle valve so, that the face featuring two punched marks faces downward when the throttle is kept closed. Prior to tightening the bolts, see to it that the valve centers in closed position. Check that the shaft moves easily.

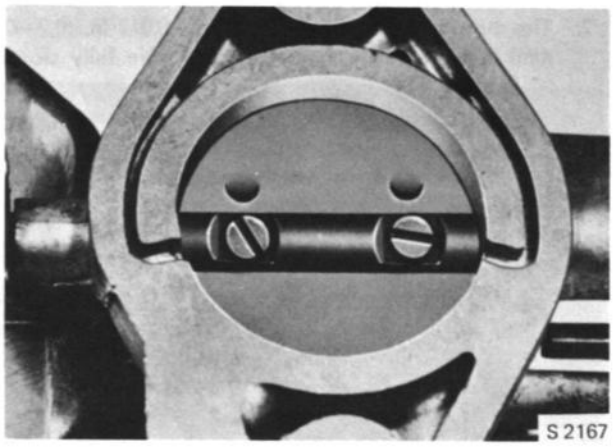

LOCATION OF FITTED THROTTLE VALVE

3. Fit the following screws of the idle device: mixture control, and idle adjusting. Fit the springs too.
4. Fit the accelerating pump rod, between the levers of the accelerating pump and the throttle valve.
5. Fit the accelerating pump diaphragm, and its spring. NOTE! The small end of the spring shall face the diaphragm. Fit the cover.
6. Fit the choke plate shaft. Prior to tightening the bolts, see to it that the choke plate centers in closed position. Check that the shaft moves easily.

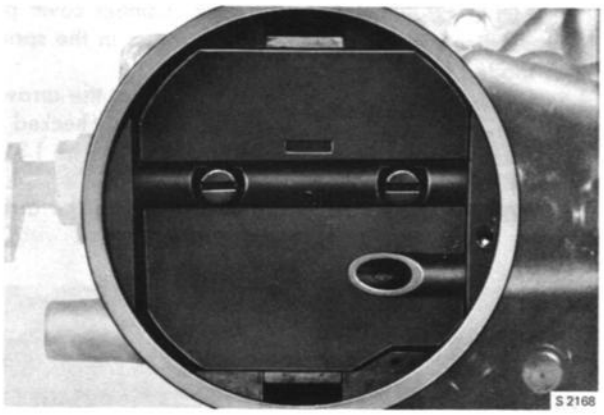

CHECKING LOCATION OF FITTED CHOKE PLATE

7. Fit the air cleaner mounting yoke, and drive the pins in.
8. Fit the automatic choke housing, with its gasket, and connect accelerating pump rod to choke plate shaft.
9. Screw the main jet on.
10. Screw needle valve on and fit float. Regarding checking and adjustment of float level, see page 231–7.
11. Insert ball and weight in the accelerating pump channel.

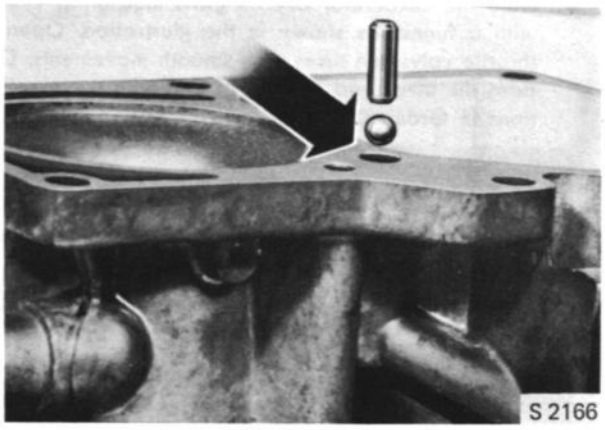

BALL AND WEIGHT, ACCELERATING PUMP FUEL CHANNEL

12. Fit the float chamber valve spring into the carburetor cover. Fit the cover, and insert the float chamber valve push-rod into the cover. Tighten cover.
13. Screw step cam on.
14. Fit the thermostatic spring housing.

Checking and adjustment of float level

1. When checking the measurement A, which shall be 1.08 in. (27,5 mm), hold the float chamber cover perpendicularly, with a view not to press in the spring-loaded ball of the float valve.
   When adjusting, bend the stop gently at the arrow.
2. The lower end-position of the float is checked by measuring the measurement B, which shall be 1.34 in. 34 mm).
   When adjusting, bend the stop gently at the arrow.

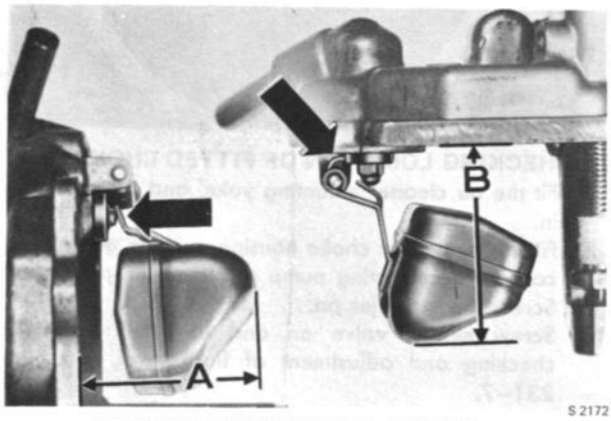

CHECK MEASUREMENT, FLOAT

Adjustment of accelerating pump

1. Fill the float chamber with fuel, using a funnel and a hose connected to the inlet pipe.
2. Slacken the idle adjusting screw completely so that full pump strokes are obtained. Open the throttle valve a few times in order to fill the fuel ducts.
3. Hold the carburetor over a glass measuring cylinder with a funnel as shown in the illustration. Open the throttle valve ten times with smooth movements. Compare the measured amount of fuel with the specifikations in Group 0.

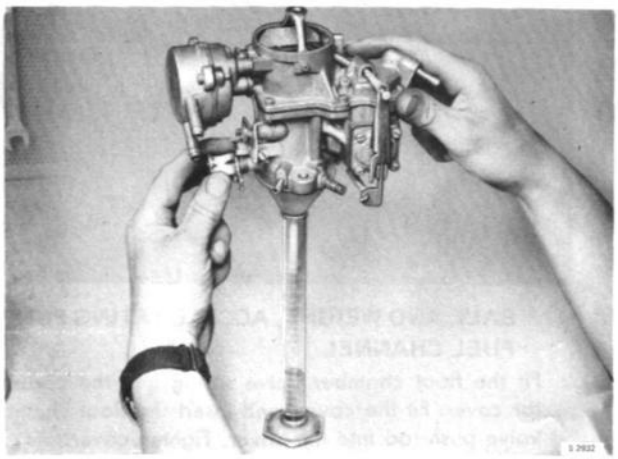

CHECKING THE ACCELERATING PUMP SETTING

4. If the measured amount of fuel does not lie within the stipulated tolerances, adjust the accelerating pump setting by bending or straightening the connecting-rod lever. Bending the lever increases the pump capacity. Conversely, if the lever is straightened out, the pump capacity is reduced.

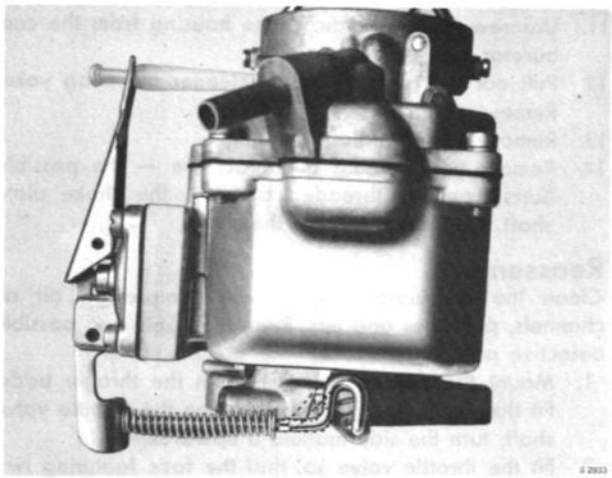

CONNECTING-ROD LEVER

Setting of float chamber valve

1. The measurement "A" = 0.32—0.40 in. (8—10 mm) is measured with the throttle wide open.
2. The measurement "B" = 0,008 in.—0,012 in. (0,2—0,3 mm) is measured with the throttle valve fully closed.

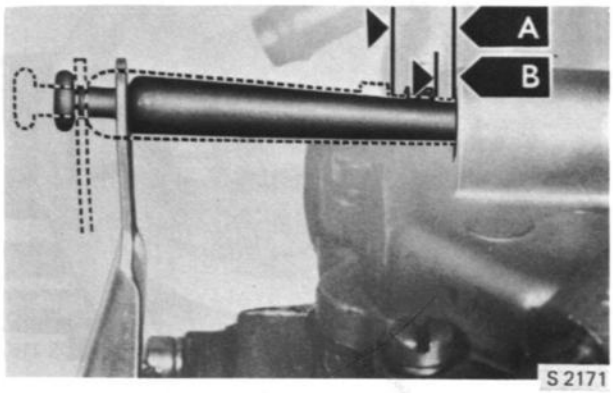

MEASURING DIMENSIONS "A" AND "B"

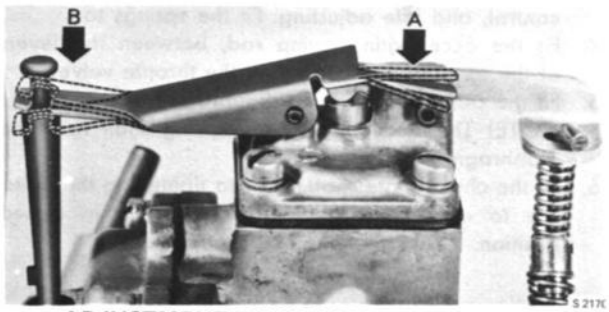

ADJUSTMENT OF MEASUREMENTS "A" AND "B"

Adjustment of measurement "A" is obtained by bending the lower part of the lever stop towards the tension pin. See fig.
Adjustment of measurement "B" is obtained by bending the lever at the push rod. See fig.

Setting of automatic choke

Normally, the functioning of the automatic choke should not be altered in any way. The setting mark on the thermostatic spring housing to be in line with the center mark on the automatic choke housing. The free end of the thermostatic spring to be fitted in the center slit of the thermostatic spring lever.

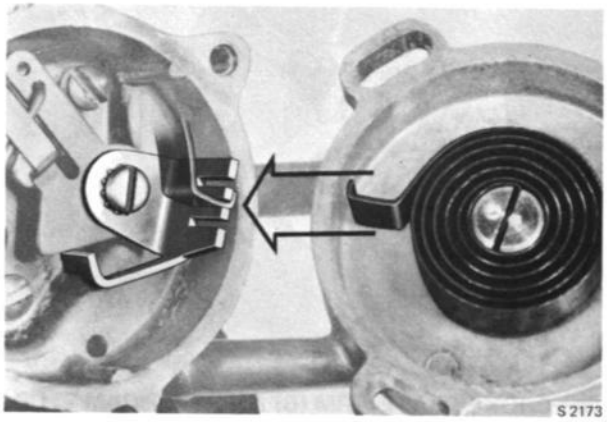

FITTING THERMOSTATIC SPRING

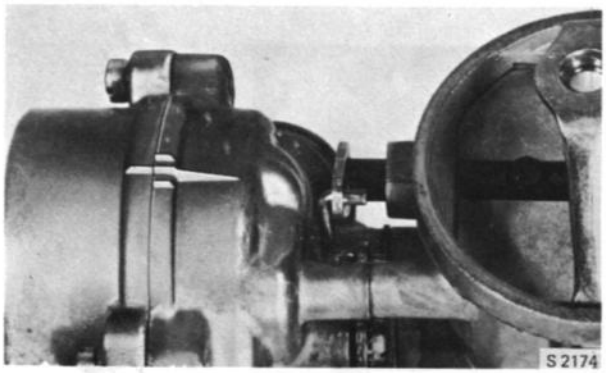

LOCATION OF THERMOSTATIC SPRING HOUSING

Setting of choke plate due to vacuum

1. Remove the thermostatic spring housing.
2. Depress the vacuum piston fully. Move the choke plate towards closed position, until the tongue of the thermostatic spring lever contacts the vacuum piston lever. In this position, the opening of the choke plate shall be 0.17—0.19 in. (4,2—4,7 mm). As gauge, a drill may be used.

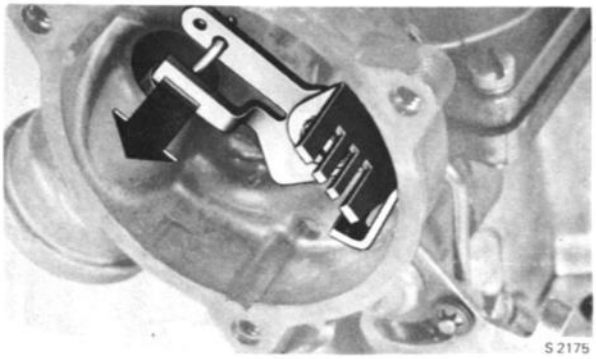

VACUUM PISTON END POSITION

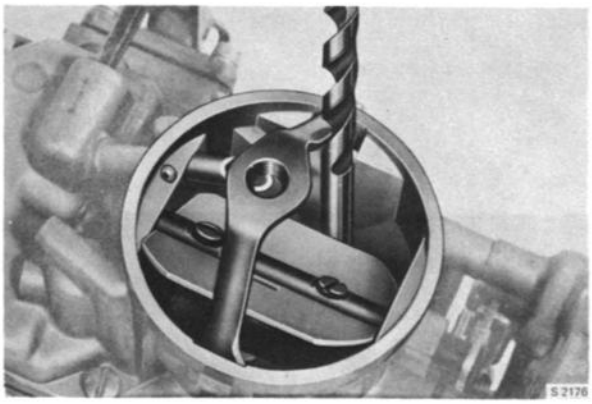

CHECKING THE SETTING

Adjustment by bending the tongue of the thermostatic spring lever.

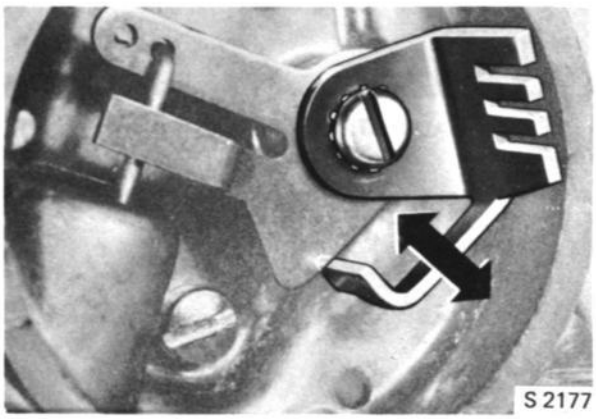

ADJUSTMENT OF THERMOSTATIC SPRING LEVER TONGUE

3. Fit the thermostatic spring housing. See to it that the spring takes up the correct position.
4. Check position of step cam, by inserting a gauge. See paragraph 2. In this position, the mark on the 3rd catch of the step cam shall be exactly in front of the stop dog of the throttle valve lever.
   Adjustment by bending the link rod.

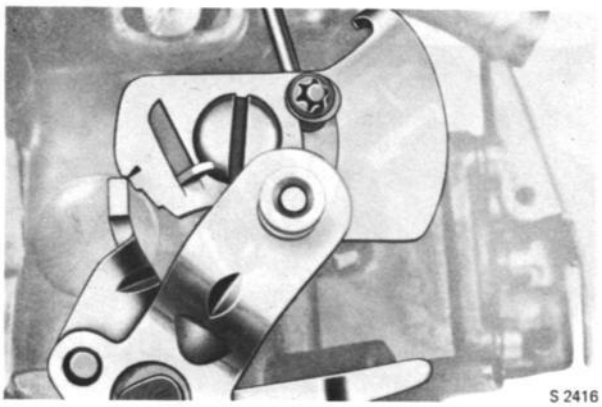

CHECKING POSITION OF STEP CAM

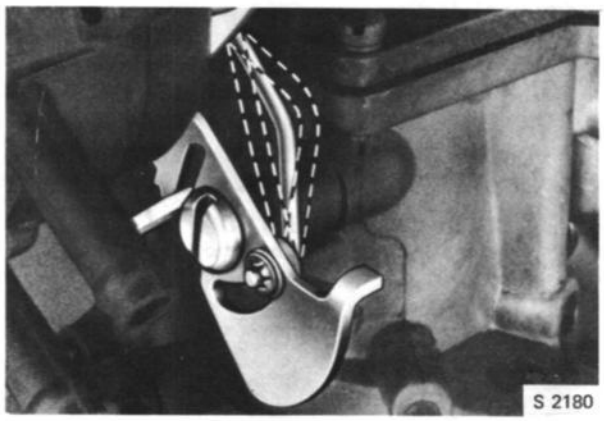

ADJUSTMENT OF LINK ROD

Setting of the mechanical opening of the choke plate

1. Open the throttle valve fully. This forces the choke plate to open, in the way that an arm (B) on the throttle spindle contacts a stop (A) on the step cam.

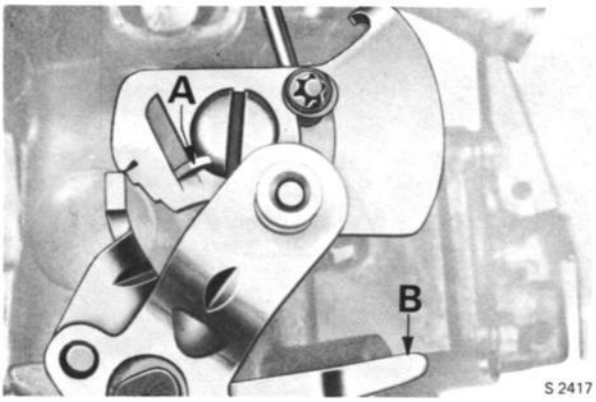

CHOKE PLATE ARM (B) AND STEP CAM STOP (A)

2. When the throttle valve is fully open, the choke plate shall open 0.19—0.23 in. (4,8—5,8 mm), which is checked with a drill.

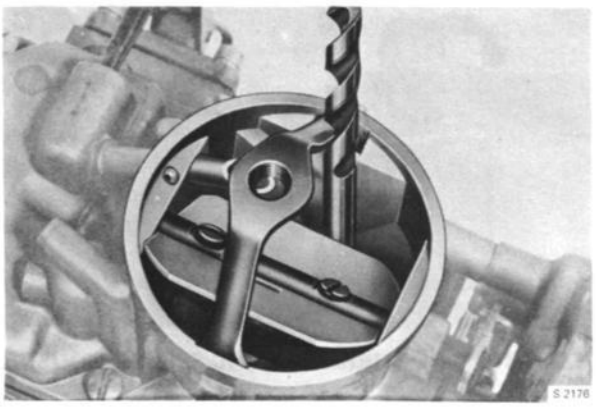

CHECKING CHOKE PLATE OPENING

Adjustment by gently bending the stop (A) on the step cam.

Fast idle adjustment

1. Run the engine until it reaches normal working temperature. Remove the air cleaner.
2. Connect a tachometer to the engine.
3. Hold the throttle valve shaft and the step cam so, that the stop dog contacts the mark on the 3rd catch of the step cam. See fig.
4. The engine speed shall now be 1800 rpm. When adjusting, bend the stop of the throttle valve shaft.

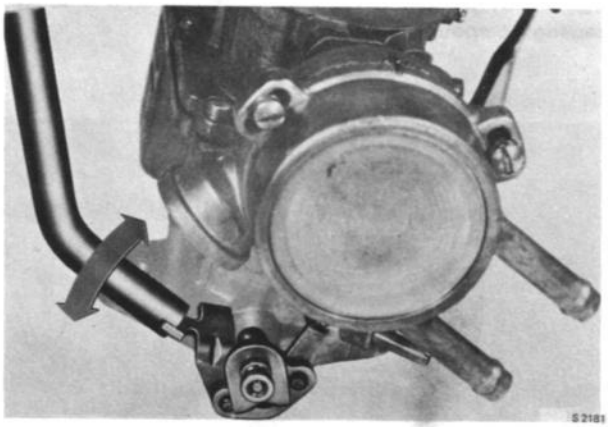

BENDING THROTTLE VALVE STOP

5. Check the fast idle setting.
6. Fit the air cleaner.

Idle adjustment

NOTE! This adjustment should be made when the engine has been warmed up to normal working temperature. Depending on how far the engine has run, adjustment should be preceded by checking the electrode gap of the spark plugs, the ignition setting and the valve clearance.

1. Reduce the engine speed so that the engine runs as slowly as possible or at max. 500 rpm.
2. Adjust the volume-control screw until the engine runs as smoothly as possible.
3. Switch the headlamps on (high beam) and increase the speed to 800-900 rpm with idle adjusting screw.

Checking the automatic choke with the carburetor installed in the car

1a. If the engine is cold, start checking as per point 2 below.

1b. If the engine is warm, begin by removing the automatic choke cover from the housing. Next, fasten the lower screw and stretch a rubber band between the screw and the lever where the termostatic spring is normally located. See fig. The rubber band then performs the same service as is normally done by the thermostatic spring when the engine is cold.

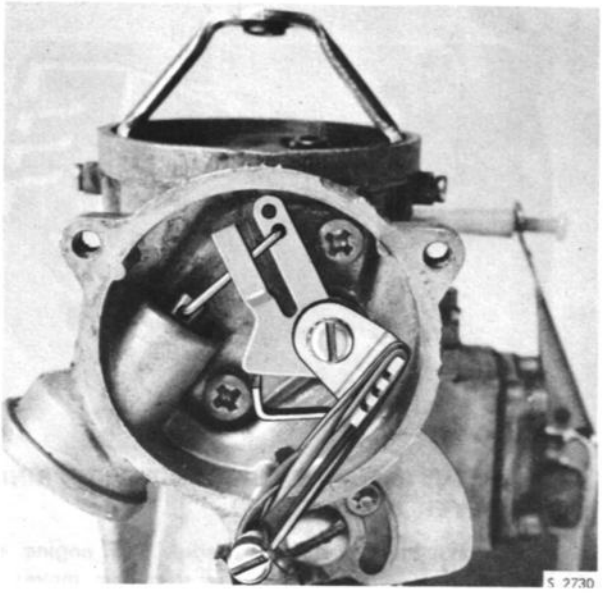

THE THERMOSTATIC SPRING HAS BEEN REPLACED BY A RUBBER BAND

2. Remove the air cleaner and depress the accelerator pedal. Check that the choke flap closes completely and that the step cam engages the highest (fourth) catch.
3. Start the engine and let it run with the step cam set at the highest (fourth) catch.
4. Check that the choke flap opens so that the distance between it and the neck of the carburetor is 0.18—0.20 in. (4,5—5,0 mm). See fig. Also check the function of the choke flap by putting it to the closed position and then releasing it. The choke flap should then return rapidly to the original position (opening 0.18—0.20 in. (4,5—5,0 mm)).

   If the choke flap does not open to the prescribed amount, this may be due to incorrect adjustment or to leakage, for instance at the bottom cover of the vacuum piston or between the choke housing and the carburetor. See "Checking the choke housing".

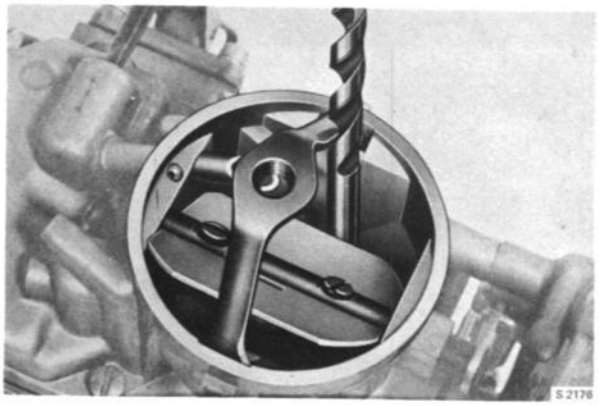

CHECKING THE SETTING

Adjustment by bending the tongue of the thermostatic spring lever.

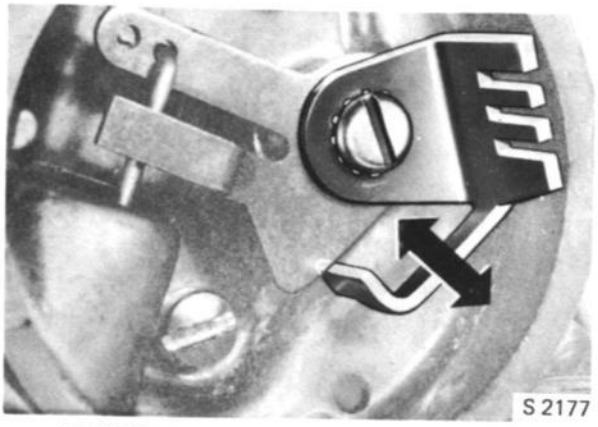

ADJUSTMENT OF THERMOSTATIC SPRING LEVER TONGUE

5. Depress the accelerator pedal. The engine speed should slow down when the step cam moves down to the third catch. Check that the mark on the third catch of the step cam is exactly opposite the stop on the throttle spindle. If necessary, adjust the connecting rod so that the correct possition is obtained. See fig., page 231–9.
6. Stop the engine. Depress the accelerator pedal fully and check that the choke flap opens 0.19—0.23 in (4,8—5,8 mm). If necessary, adjust by carefully bending the stop on the cam disc. See fig., page 231-8.
7. Remove the rubber band and refit the cover of the automatic choke if this item has been removed. Check that the spring takes up the correct position. See fig., page 231–8. Warm up the engine and check the volume control screw setting, the idling speed and the fast idling speed.

Checking the choke housing

Remove the choke housing. Connect a hose to the nipple of the vacuum duct and suck out the air so that the piston is pulled down against its sealing ring. After this, it should be impossible to suck out any more air. If air can still be sucked out, check that there is no leakage at the bottom cover of the vacuum piston by holding one hand against the cover. If this does not help, the piston sealing ring is defective and the choke housing must be renewed. Leakage at the bottom cover can be sealed with a suitable sealing compound.

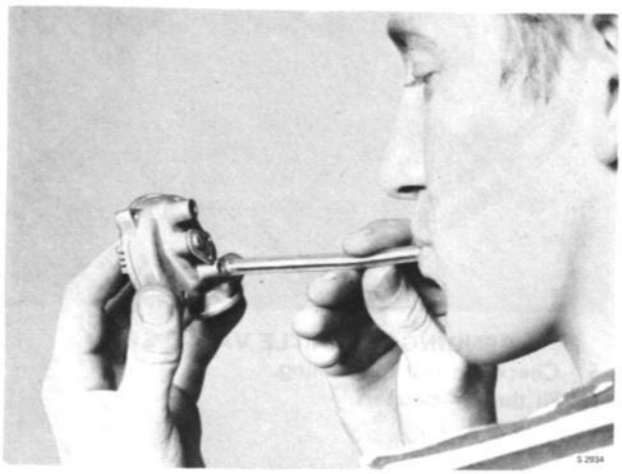

CHECKING THE CHOKE HOUSING

AUTOMATIC CHOKE, USA CARS AS FROM MODEL 1970

As from model 1970, the SAAB V4 engine is fitted with a slightly modified automatic choke mechanism which requires a different procedure for setting choke plate pull down.
Operation of the new "modulating" choke is similar to "69" models using a bimetal spring sensitive to engine coolant temperature.
When the engine is started manifold vacuum acts on the base of the choke piston and draws the piston down the bore. Unlike previous chokes the modulating choke bore has two narrow slots machined over part of its length which are uncovered as the piston moves downwards. This allows air at atmosphere pressure to bleed past the piston and reduce the vacuum. This air bleed "modulates" the piston movement to prevent over weakening of the mixture considerably improving driveability.

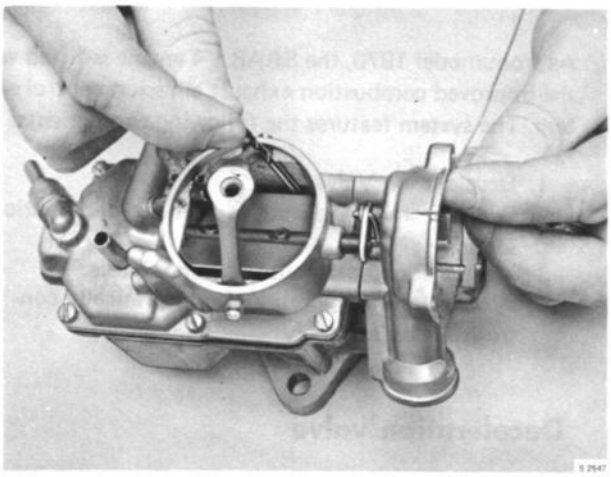

CHECKING THE CHOKE PLATE OPENING

Choke plate pull down

To set choke plate pull down.

1. Remove the thermostatic spring and water housing.
2. Position a piece of 0.040" thick wire in the inner slot above the piston and hold the vacuum piston lever to keep piston and wire in position.

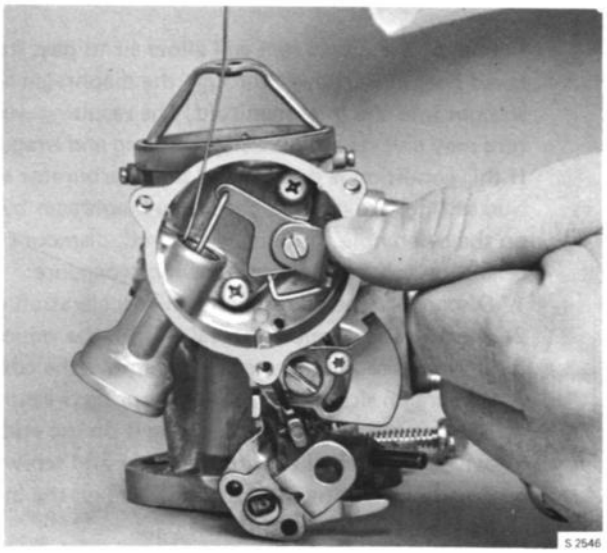

SETTING THE CHOKE PLATE WITH A PIECE OF WIRE

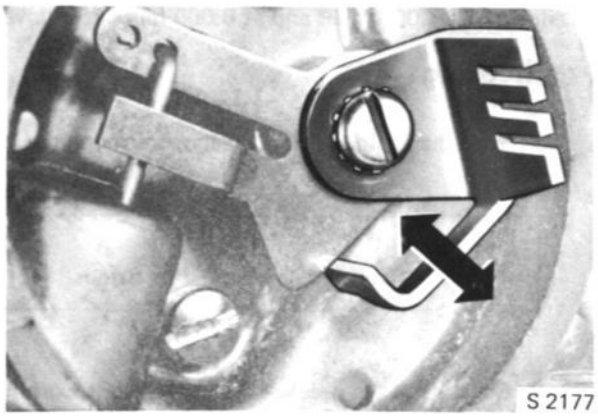

ADJUSTING THE CLEARANCE

3. The bottom of the choke plate should now be 0.080–0.100" from the carburetor body.
   Check this with a suitable drill or gauge rod. If necessary bend the extension of the choke thermostat lever (the part that rests against the vacuum piston lever) to adjust the clearance.

DECELERATION VALVE
USA CARS AS FROM MODEL 1970

As from model 1970, the SAAB V4 engine is fitted with the improved combustion exhaust emission control system. The system features the following components.

1. Deceleration Valve.
2. Carburetor with revised jet sizes and deceleration section.
3. Adaptationed distributor advance curve.
4. Air cleaner incorporating thermostatically controlled valve assembly.

Deceleration valve

The deceleration valve assembly is connected to the inlet manifold via the intermediate plate. The valve body contains a spring loaded diaphragm which is held in place by the bottom cover. The diaphragm is subjected to manifold vacuum on the top side and atmospheric pressure on the underside by a bleed hole in the cover.
During deceleration the manifold vacuum is sufficient for the diaphragm to overcome the spring loading and lift the deceleration valve off its seat.
The fuel-and-air supply needed for combustion is fed to the engine through a hose which connects the deceleration valve to the deceleration section of the carburetor.
The deceleration valve shall be checked and if necessary adjusted at 1.000 miles and at 6.000 miles as follows:

Checking

1. Run the engine until normal operating temperature.

> NOTE
> The air cleaner must be fitted.

2. Check that the deceleration valve is not working at idling speed. This can be done by disconnecting one of the hose between carburetor and deceleration valve. If the valve is open, i.e. vacuum is passing the valve, the adjusting screw on the deceleration valve has to be screwed further in until the valve is closed. Connect the hose.
3. Connect a tachometer.
4. Adjust idling speed to 900 rpm.
5. Advance the engine speed to 3.000 rpm with the throttle. Let down the throttle rapidly and measure the time as require to drop the engine speed from 3.000 rpm to idle.
   An engine fitted with a correctly adjusted deceleration valve should drop from 3.000 rpm to idle in 7 to 8 seconds.

Adjustment

1. Remove the air cleaner.

2. a. If the requisite time is more than 7 to 8 seconds, the deceleration valve adjusting screw should be screwed further in until the desired figure is reached.
   b. If the requisite time is less than 7 to 8 seconds, the adjusting screw should be "backed-out" until the desired figure is reached.

3. Fit the air cleaner and check the requisite time again. If necessary, repeat the procedure until the requisite time is correct.

Failure of the diaphragm will allow air to pass from the bleed hole in the cover, through the diaphragm and straight into the inlet manifold. The resulting weak mixture may give rise to persistant stalling and irregular idling. If this condition is present and both carburetor and ignition settings are correct, check the diaphragm by covering up the bleed hole. If idling is restored, dismount the deceleration valve using the following procedure:

1. Disconnect the inlet pipe to the deceleration valve.
2. Remove the deceleration valve from the vehicle.
3. Undo the rataining screws and remove the cover and diaphragm slowly to release the spring pressure.
4. Replace the diaphragm (locating it on the end of the valve stem) together with the cover and screws.
5. Finally install the deceleration valve on the inlet manifold and reconnect the inlet pipe.

A high idling speed (1200–1400 rpm) which cannot be cured by normal adjustment may be caused by a permanently open deceleration valve. Check this by removing the bottom cover and diaphragm (remember the spring loading behind the cover). If the valve is stuck in the open position, clean the parts and if necessary replace the complete deceleration valve assembly. Do not attempt to free the valve. Separate parts other than the diaphragm will not be serviced.

Carburetor

With the deceleration valve open, the high manifold vacuum is sensed by the deceleration section of the carburetor. The vacuum draws a metered amount of fuel and air from the fuel pick up tube and the air bleed which flows from the outlet tube through the deceleration valve and into the manifold. This extra quantity of fuel and air, coupled with other engine modifications provides improved combustion within the engine cylinders which considerably reduces exhaust emission.
The deceleration section of carburetor requires no maintenance but should the fuel pick up tube be damaged, the upper body casting must be replaced.
To adjust carburetor slow running, use the following procedure:

With the engine at normal operating temperature, connect a tachometer and set the throttle adjusting screw to obtain 900 rpm. If the correct rpm could not be achieved, check that the deceleration valve is not working. Adjust the volume control screw until the CO contents in the exhaust is 1.5–2%.

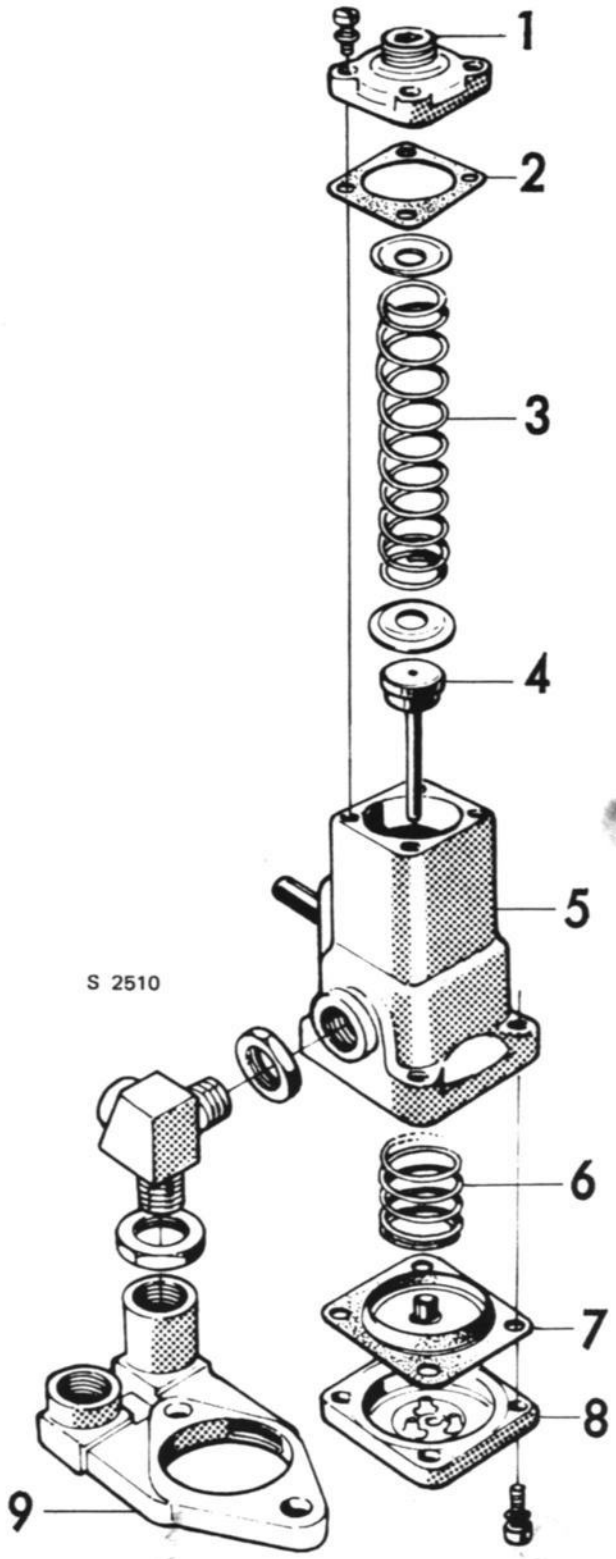

DECELERATION VALVE

1. Adjusting screw
2. Valve
3. Spring
4. Valve
5. Body
6. Spring
7. Diaphragm
8. Bottom cover
9. Intermediate plate

AIR CLEANER ASSEMBLY USA CARS AS FROM MODEL 1970

The air cleaner is designed to provide the carburetor with air at a temperature above 90°F (32°C) during normal operating conditions.
The air cleaner incorporates a valve assembly, which comprises a metal box fed by two air inlets, one forming the normal cold air intake horn, and the other taking hot air via a convoluted hose from a separate heat stove around the exhaust pipe. Enclosed in the box is a spring-loaded flap valve which pivots to control the proportions of hot and cold air entering the engine. A thermostatic bulb is connected through a spring linkage to the flap valve, the bulb being exposed to the incoming air.

Operation

During the engine warm up period, air is drawn through the hot air intake over the thermostatic bulb and into the air cleaner.
The air, coming from the region of the exhaust pipe heats up ralatively quickly and when the air temperature reaches approx. 90°F (32°C). The thermostatic bulb expands is and begins to force the flap valve down.
This allows cold air to enter the duct and valve assembly, mix with the hot air, and then pass to the engine. When the temperature of the air further increases, the valve plate will move towards the back position and will completely shut off the hot air intake if the under bonnet temperature reaches 95°–105°F (35°–40°C).

Service

Failure of this system to function will affect the vehicle exhaust emission control system and may result in failure of the vehicle to meet Federal regulations, as well as affecting driveability. To determine whether the system is fuctioning properly the following procedure should be used.

1. Remove the front hose. With the valve assembly in position, the engine cold, and an ambient temperature in the engine compartment of 85°F (29°C) or less, the flap valve now should be in the "forward" position, shutting off the cold air intake.
2. Start the engine and let it run at fast idling about 2–6 minutes. If the ambient temperature is about 50°–70°F (10°–21°C) the valve plate now should move towards the middle or the back position.
   If the flap valve does not meet these requirements, remove the unit by unscrewing the threee screws and check for possible wear or breakage of the flap valve or linkage.

The thermostat can be checked as follows:

1. Place the flap valve under running water with a temperature of 82°–85°F (28°–30°).
   Note the angle of 15°.

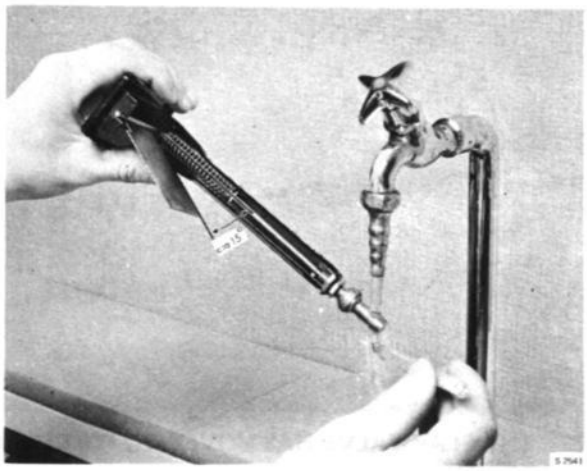

HOLDING THE FLAP VALVE IN POSITION

2. Let go the flap valve after a minute, and it will remain in the same position.

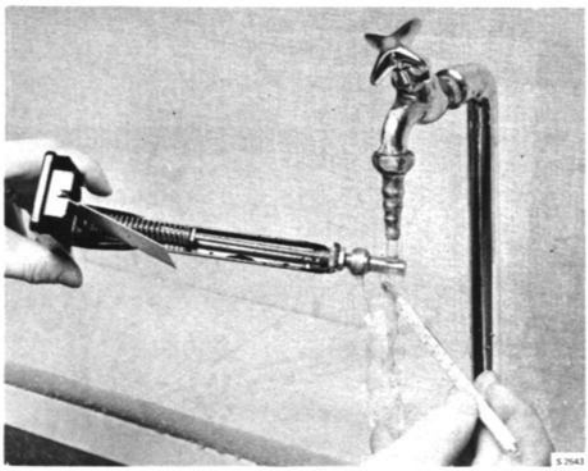

THE FLAP VALVE IS STAYING IN POSITION WITHOUT ANY SUPPORT

3. Let the temperature of the water rise to 87°–90°F (31°–32°C). The flap valve will now move to the central position.

THE FLAP VALVE HAS MOVED TO ITS CENTRAL POSITION

4. When the temperature of the water is 95°–105°F (35°–40°C), the flap valve has moved to its left posi tion.

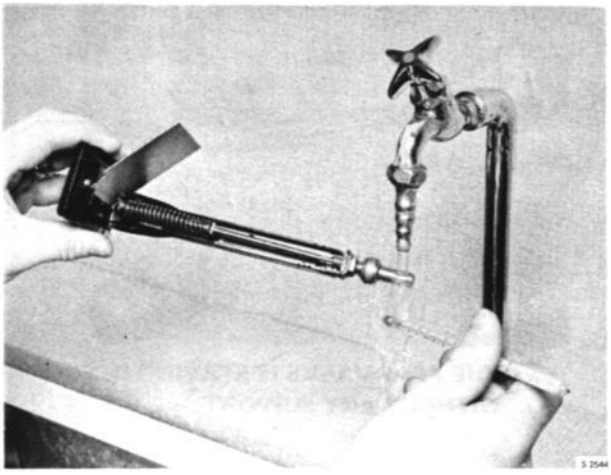

THE FLAP VALVE HAS MOVED TO ITS LEFT POSITION

If these requirements are not met the thermostatic unit should be replaced.
After replacement, check the operation of the new thermostatic unit.

Air cleaner element

The air cleaner element should be replaced after 12.000 miles and every subsequent 12.000 miles, in line with normal service procedures.

REMOVAL AND INSTALLATION OF FUEL PUMP

Separate the fuel line from the fuel pump. Take off the nuts and lock washers and remove the pump and push rod. Remove the old gasket. Always use a new gasket when reassembling the fuel pump.

> NOTE
>
> Mark the end of the pump push rod that rests against the camshaft to ensure that the push rod is reinstalled the right way round.

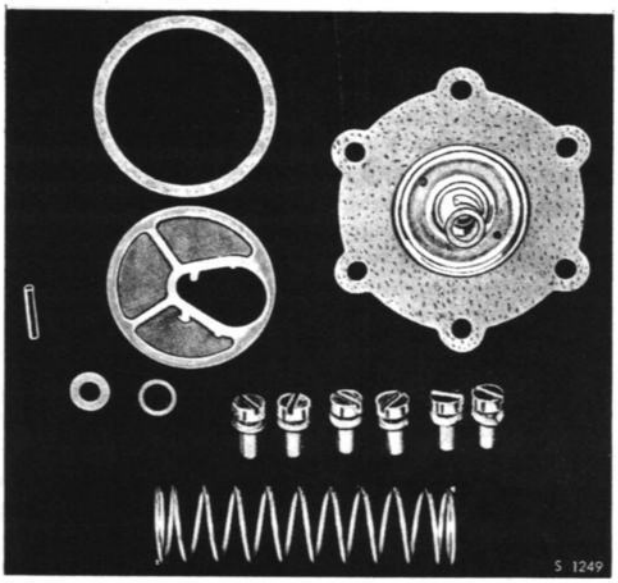

REPAIR KIT, FUEL PUMP

OVERHAULING THE FUEL PUMP WITH A REPAIR KIT

Disassembly

1. Screw off the cover and remove the gasket and strainer.
2. Make a mark over the flange on the lower and upper part of the pump so that they can be reinstalled in the same position.
3. Back off and remove the screws and separate the upper and lower parts of the pump from each other.

   NOTE: The upper part with its valves is an integral unit and cannot be disassembled further.

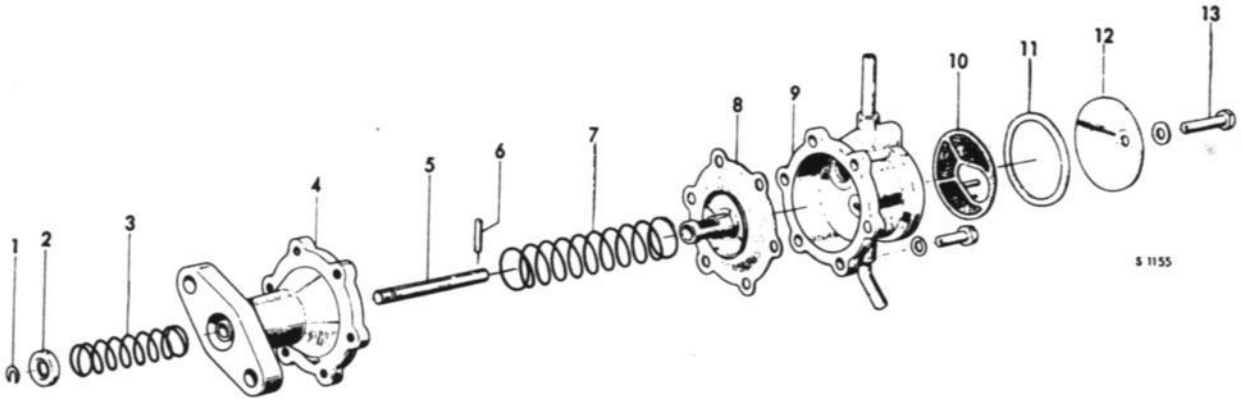

FUEL PUMP

1. Lock washer
2. Sleeve
3. Spring
4. Pump body, lower part
5. Diaphragm rod
6. Retaining pin
7. Spring
8. Diaphragm
9. Pump body, upper part
10. Filter
11. Gasket
12. Cover
13. Screw for cover

4. Stand the lower part of the pump with the diaphragm on a flat surface. Press the spiral spring lock washer down with a 10-mm open-end spanner and remove the lock ring from its groove in the diaphragm rod. Remove the spring lock washer and the spring. Replace the lock ring on the diaphragm rod.

NOTE

A small shaft seal is provided to afford a seal between the diaphragm rod and the lower part of the pump. This is not replaceable. As the lips on the shaft seal face the ring groove for the lock ring in the diaphragm rod, the shaft seal would be completely ruined if the diaphragm rod was withdrawn from the lower part of the pump towards the diaphragm. Because of this, always proceed exactly as follows:

5. Hold the lower part of the pump in the hand, press the diaphragm lightly inwards and remove the lock ring again. Then, release the diaphragm only far enough to allow the pins which hold the diaphragm to the diaphragm rod to be removed by pressing with a drawing point.
6. Pull the diaphragm rod away from the lower part of the pump towards the drive side. Remove the diaphragm and the compression spring.

Reassembly

1. Apply a little grease to the diaphragm rod and connect it with the pin to the new diaphragm. Put on the spring.
2. Pass the lower part of the pump against the spring pressure onto the diaphragm rod until the diaphragm makes contact.
3. Stand the lower part of the pump with the diaphragm on a flat surface. Install the compression spring with the lock washer. Hold the lock washer with a 0.40 in. (10 mm) spanner, press it down on the push rod and insert the lock ring.
4. Align the upper part of the pump according to the marks on the flanges. Press the push rod in so far that the diaphragm is not under tension. In this position, insert the screws and join the upper and lower parts of the pump together.
5. Install a new strainer and a new gasket. Screw on the cover.

CHECKING THE FUEL PUMP PRESSURE

To carry out this check, a T-nipple and a suitable pressure gauge will be needed. Connect up as shown in the figure. Measuring can now be done throughout the entire speed range. For figures, see "Technical data".

MEASURING FUEL PRESSURE

FUEL TANK WITH FITTINGS AND FUEL LINE

FUEL TANK

Disassembly

1. Remove the drain plug, accessible from under the car, and empty the tank.
2. Remove the rear seat cushion and backrest.
3. Saab 95: Remove the sheathing over the tank by unhooking the two spiral fasteners.
   Saab 96: Lift out the spare wheel and remove the front part of the trunk floor.
4. Disconnect the tank earth wire from the body and detach the cables from the fuel gage sender unit. Note the positions of the cable connections.
5. Detach the fuel line from the tank.
6. Disconnect the two tank retaining straps. On the Saab 96, the nuts for these straps are accessible through holes in the rear sloping panel.
7. Jack up the car and undo the clips for the venting and filler tubes under the rear fender.
8. Raise the right side of the tank and remove the tank in an upwards and rearwards direction.
9. Collect the rubber seal in the wheel house wall.

Reassembly

1. Refit the rubber seal on the venting and filler tubes. This seal should be provided with a leather thong or suchlike in its groove to facilitate fitting.
2. Make sure that the tank retaining straps are correctly located. Cover the top of the tank filler connection and the hole for the fuel gage sender unit with masking tape.
3. Pass the tank filler connection and the ends of the leather thong through the hole in the wheel house wall and place the tank in position.
4. Refit the rubber seal in the wheel house wall by drawing out the previously inserted leather thong from the groove.
5. Remove the masking tape, rejoin the venting and filler tubes and replace the clamps.
6. Refit the wheel and lower the car.
7. Reattach the fuel line to the tank and then tighten the tank retaining straps.
8. Reconnect the tank earth wire to the body and the cables to the fuel gage sender unit. The grey cable must be connected to "G" and the brown cable to "W".
9. Refit the trunk floor or sheathing, as applicable. Replace seats and cushions.

Checking fuel-tank ventilation, as from model 1970

It is vitally important for the ventilation hose not to be clogged. If it is, the fuel pump will be unable to draw fuel or else the tank will be sucked together and collapse. Check, therefore, that the hose opening under the rear bumper is not clogged with dirt, etc., and that the hose does not get squeezed in connection with assembly work.

Fuel line

To replace the fuel line, the power unit must be lifted out of the car. Joins in the line should be made with great care and only if absolutely essential. In no circumstances may joins in the line be made inside the passenger compartment.

Removal of fuel line

1. Remove the hood, the front panel and the radiator.
2. Take the seats, cushions and mats out of the car.
3. Remove the front part of the trunk floor.
4. Disconnect the fuel line from the tank and pump, and bend open all clips and floor brackets. Collect all rubber cushions from around the line inside the car.
5. Cut the fuel line off about 6—8 in. (15—20 cm) behind the supporting beam for the rear seat cushion and collect the rear part of the line.
6. Pull the fuel line out in the forward direction through the engine compartment.

Installation of fuel line

1. Refix the rear nut for the fuel line and cover the opening with masking tape.
2. Blow the fuel line floor channel clean, and adjust floor brackets and clips as necessary to ensure that the line runs clear.
3. Insert the fuel line from the front through the hole in the dash panel.
4. Bend the rear section of the fuel line to the same shape as the cut-off part.
5. Tear off the masking tape and reconnect the fuel line to the fuel tank and pump.
6. Fit the rubber cushions round the fuel line and the rubber seal in the dash panel. Then bend down all clips and floor brackets.
7. Refit the trunk floor, mats, seats and cushions.
8. Refit the front panel, the horn and the hood.

Cleaning the fuel system

If impurities are found in the fuel tank, both tank and line must be cleaned. This can be done by emptying the tank and flushing it out with pure gasoline or spirit. Make sure that the tank is horizontal, so that the impurities and foreign matter do not collect at one corner. To flush the system more thoroughly, remove the fuel gage sender unit and direct the stream of liquid through the hole towards different parts of the tank. An extremely dirty tank should be removed for cleaning. Disconnect the fuel line from the tank and the pump and blow it clean with compressed air. Remove and clean the fuel pump filter. Lift off the carburetor cover, take out the float and the main jet and blow clean with compressed air.

INDUCTION MANIFOLD REMOVAL AND INSTALLATION

Removal

1. Remove the air filter.
2. Drain the coolant through the tap at the bottom of the radiator.
3. Disconnect the earth cable from the battery.
4. Remove the distributor cap and detach the ignition cables.
5. Disconnect the vacuum hose and primary cable from the distributor.
6. Remove the distributor.
7. Disconnect the hoses from the radiator and heater element.
8. Disconnect the fuel line.
9. Remove the carburetor.
10. Remove the valve covers.
11. Remove the bolts and nuts from the induction manifold, separate the induction manifold from the gasket and remove it.
12. Remove the gasket.

Installation

1. Remove all residual gasket fragments from the mounting surfaces.
2. Apply sealing compound to the surfaces of the cylinder heads as shown in the figure. Install the induction manifold gasket. The protruding part of the righthand cylinder head gasket shall enter the aperture in the induction manifold gasket.

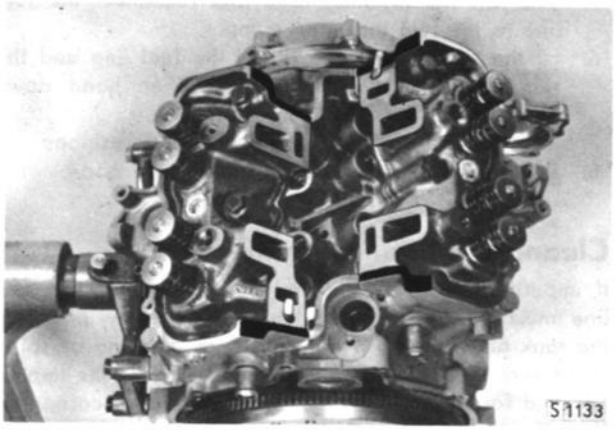

ASSEMBLED CYLINDER HEADS WITH MARKED SURFACES FOR APPLICATION OF SEALING COMPOUND

3. Install the induction manifold. Tighten the screws and nuts in the sequence indicated below in two stages to the correct torque. See fig.

For SAAB 95 V4 up to chassis No. 66249 and SAAB 96 V4 up to chassis No. 524379, the following tightening torques must be applied:

Stage	Screws	Bolts
1	2.9—5.8 ft.-lb. (0.4—0.8 kgm)	2.2—3.6 ft.-lb. (0.3—0.5 kgm)
2	16—21 ft.-lb. (2.2—2.9 kgm)	11—13 ft.-lb. (1.5—1.8 kgm)

For SAAB 95 V4 as from chassis No. 66250 and SAAB 96 V4 as from chassis No. 524380, the following tightening torques must be applied:

Stage	Screws	Bolts
1	2.9—5.8 ft.-lb. (0.4—0.8 kgm)	2.9—5.8 ft.-lb. (0.4—0.8 kgm)
2	15—18 ft.-lb. (2.1—2.5 kgm)	15—18 ft.-lb. (2.1—2.5 kgm)

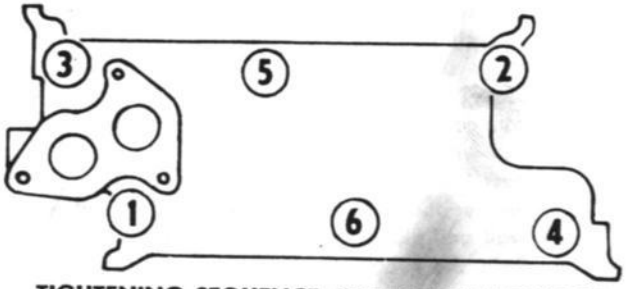

TIGHTENING SEQUENCE, INDUCTION MANIFOLD BOLTS

> IMPORTANT
>
> To ensure effective sealing, the bolts must be tightened in two stages to the prescribed torque in the sequence indicated.

4. Install the distributor in the engine block and adjust it in accordance with the instructions in group 3, section 342.
5. Install the valve covers, with new gaskets if necessary. Tighten the bolts evenly to the prescribed torque.
6. Install the distributor cap and attach the ignition cables.
7. Install the carburetor.
8. Reconnect the fuel and vacuum lines.
9. Reconnect all water hoses.
10. Fill the system with coolant and bleed the system.
11. Reconnect the battery earth cable.
12. Install the air filter.

FRONT MUFFLER

Removal

1. Remove the hood.
2. Jack up the front part of the car.
3. Disconnect the battery cable.
4. Unfasten the cables of the starting motor. Remove the starting motor.
5. Unscrew the nuts at the engine connections. Remove the binding clips from the inlet pipe of the muffler at the engine brackets. Remove the spacers, and the flame guard at the engine.
6. Loosen the exhaust pipe clamp. Separate the exhaust pipe from the muffler.
7. Remove the muffler by lowering it and pulling the R.H. inlet pipe out through the engine compartment floor. Then turn the R.H. pipe forward between front panel and bumper, then the L.H. pipe can be removed. Be careful not to damage the paintwork of the front panel.

Installation

Mounting to be made in the reverse sequence.
Always use new gaskets. Make sure there is good sealing at all connections. See to it that there are no tensions in the exhaust pipe.

Seal between exhaust muffler and engine block

In the event of leakage between the mufflers and the engine block, tighten the bolts. If this doesn't help, new gaskets must be fitted. Tighten the bolts carefully to avoid damaging the flanges.

Sealing between mufflers and exhaust pipe

In the event of leakage at the connection between the exhaust pipe and the front muffler or between the exhaust pipe and the rear muffler, carry out the following measures:

1. **Undo the clamp — see fig.**
2. **Push the exhaust pipe into the muffler pipe connection.**
3. **Check that the exhaust pipe is not out of true, which would cause stresses at the connections.**
4. **Secure the clamp by tightening its bolt and nut. If these measures prove inadequate, check the alignment of the pipe and straighten if necessary.**

Repairs

The front muffler is seldom choked with carbon or other foreign matter as it is located close to the engine, where the temperature inside the muffler is rather high. The rear muffler, on the other hand, may become choked with carbon in certain circumstances. Carbon deposits will be thickest during the cold part of the year, and when the car is driven at low speed in high gear. The muffler, like the exhaust pipe, can be burnt clean. Any cracks in the mufflers can be repaired by welding.

Cracks

Cracked exhaust pipes or mufflers must be replaced or repaired by welding. Make sure that there are no residual stresses or permanent distortions in these parts after welding.

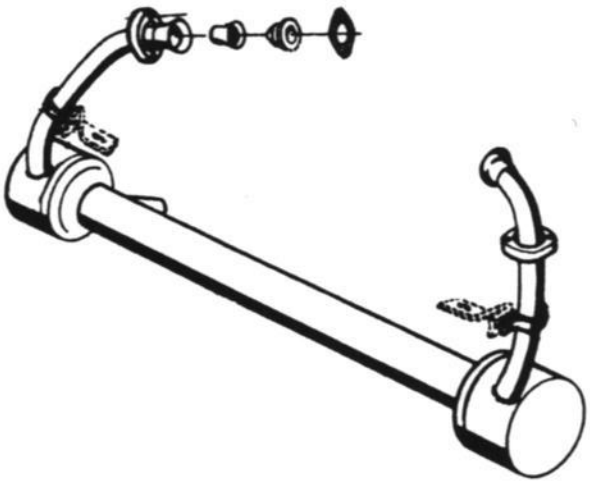

FRONT MUFFLER S 2182

REAR MUFFLER

Removal

1. Jack up the R.H. side of the car. Remove the rear wheel, and loosen the exhaust pipe clamp at the rear muffler.
2. Back off the two upper nuts by means of which the muffler is suspended.
3. Detach the muffler from the exhaust pipe and remove the muffler.

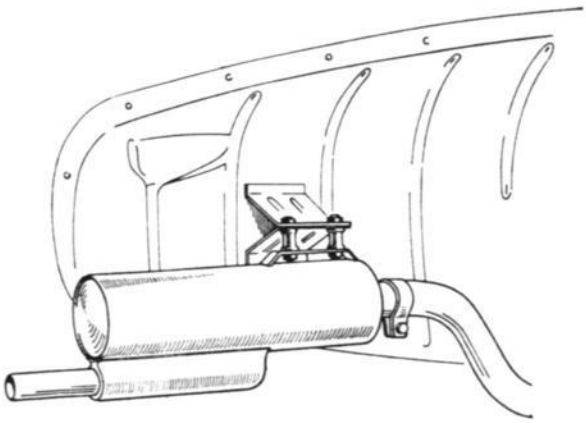

REAR MUFFLER S 550

Installation

1. Pass the muffler onto the exhaust pipe. Don't forget the clamp.
2. Fit the muffler to the bracket on the wheel house wall.
3. Tighten the clamp at the exhaust pipe connection to the muffler.
4. Start the engine and check for leaks.
5. Remount the rear wheel, and lower the car.

EXHAUST PIPE

Removal

Jack up the right side of the car before starting work.

1. Take off the right rear wheel and release the clamp joining the exhaust pipe to the rear muffler.
2. Back off and remove the upper nuts with which the rear muffler is suspended, and pull the muffler off the exhaust pipe.
3. Undo the clamp joining the exhaust pipe to the front muffler.
4. Back off and remove the nuts with which the exhaust pipe is secured under the floor.
5. Pull the exhaust pipe off the front muffler.

Reassembly

Reassembly takes place in the reverse order.

Make sure that the exhaust pipe is properly fitted in the muffler pipe connections, thus ensuring effective sealing when the clamps are tightened and precluding tension in the rubber cushions at the floor plate. If the exhaust pipe is mounted under tension, vibrations may easily develop in the body of the car.

Rubber cushions, exhaust pipe and rear muffler

This work is facilitated if the right side of the car is jacked up and the right rear wheel removed.

Removal

1. Separate the exhaust pipe rubber cushions from the floor. The two nuts can be reached from inside the car if the rear mat is folded back out of the way.
2. Back off and remove the nuts holding the rubber cushions to the exhaust pipe.
3. Back off and remove the upper nuts holding the rear muffler rubber cushions to the bracket on the wall of the wheel house.
4. Back off and remove the nuts holding the rubber cushions to the muffler. It may possibly be necessary also to remove the muffler.

Reassembly

1. Fit the exhaust pipe rubber cushions under the floor.
2. Screw the rubber cushions onto the rear muffler.
3. Refit the muffler, together with the rubber cushions, to the bracket on the wall of the wheel house.
4. Secure the exhaust pipe over the rubber cushions in the floor. Make sure that it is not under tension.

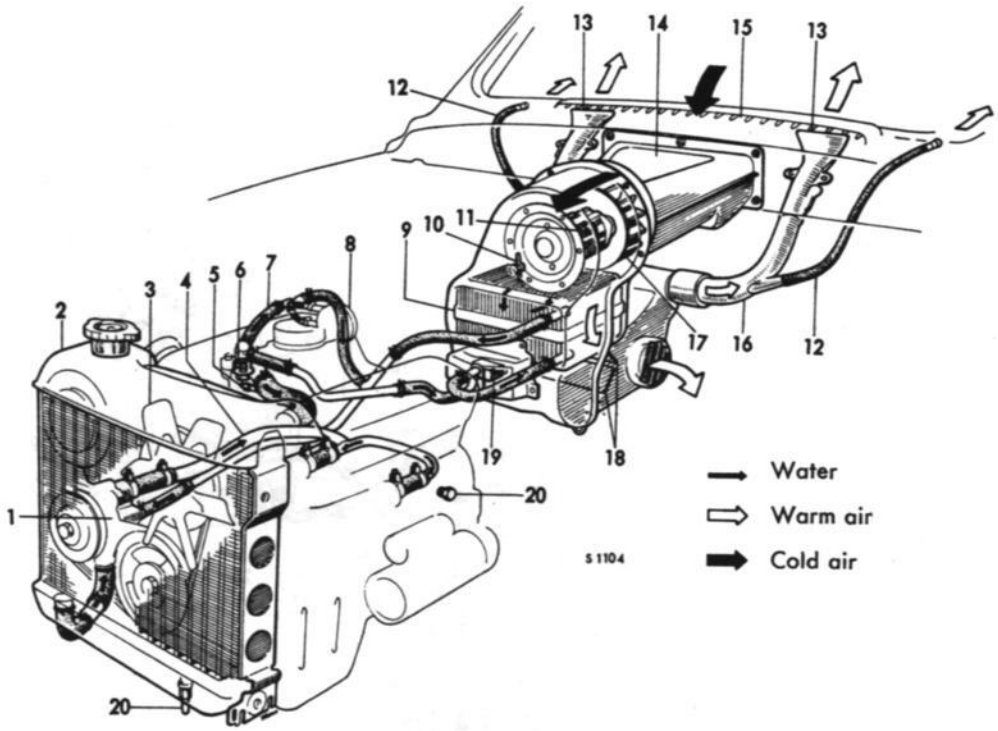

COOLING AND HEATING SYSTEM, UP TO AND INCL. THE MODEL 1968

1. Water pump
2. Radiator
3. Fan
4. Water distribution tube
5. Temperature transmitter
6. Thermostat
7. By-pass
8. Water jacket, automatic choke
9. Heat exchanger
10. Bleeding nipple
11. Fan motor
12. Side defroster hose
13. Defroster jet
14. Collector box
15. Cold-air intake
16. Defroster hose
17. Fan wheel
18. Air distributor
19. Thermostat valve
20. Drain plugs (one on each side)

1. Water pump
2. Radiator
3. Radiator cap
4. Expansion tank
5. Pressure cap
6. Fan
7. Temperature transmitter
8. Thermostat
9. By-pass
10. Water jacket, automatic choke
11. Heater core
12. Bleeding nipple
13. Fan motor
14. Side defroster hose
15. Defroster jet
16. Collector box
17. Cold-air intake
18. Defroster pipe
19. Fan wheel
20. Air distributor
21. Thermostat valve
22. Drain valve
23. Drain plugs (one on each side)

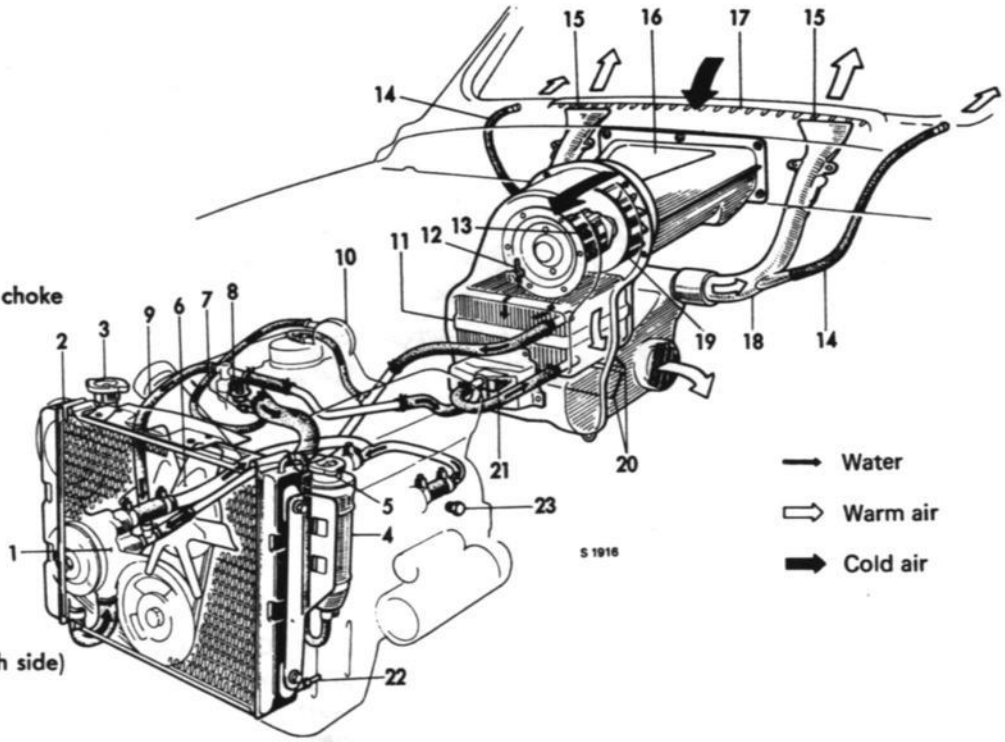

COOLING AND HEATING SYSTEM, UP TO AND INCL. THE MODEL 1969

1. Water pump
2. Radiator
3. Radiator cap
4. Expansion tank
5. Pressure cap
6. Fan
7. Temperature transmitter
8. Thermostat
9. By-pass
10. Water jacket, automatic choke
11. Heat exchanger
12. Bleeding nipple
13. Fan motor
14. Side defroster hose
15. Defroster jet
16. Collector box
17. Cold-air intake
18. Defroster pipe
19. Fan wheel
20. Air distributor
21. Thermostat valve
22. Drain valve
23. Drain plugs (one on each side)

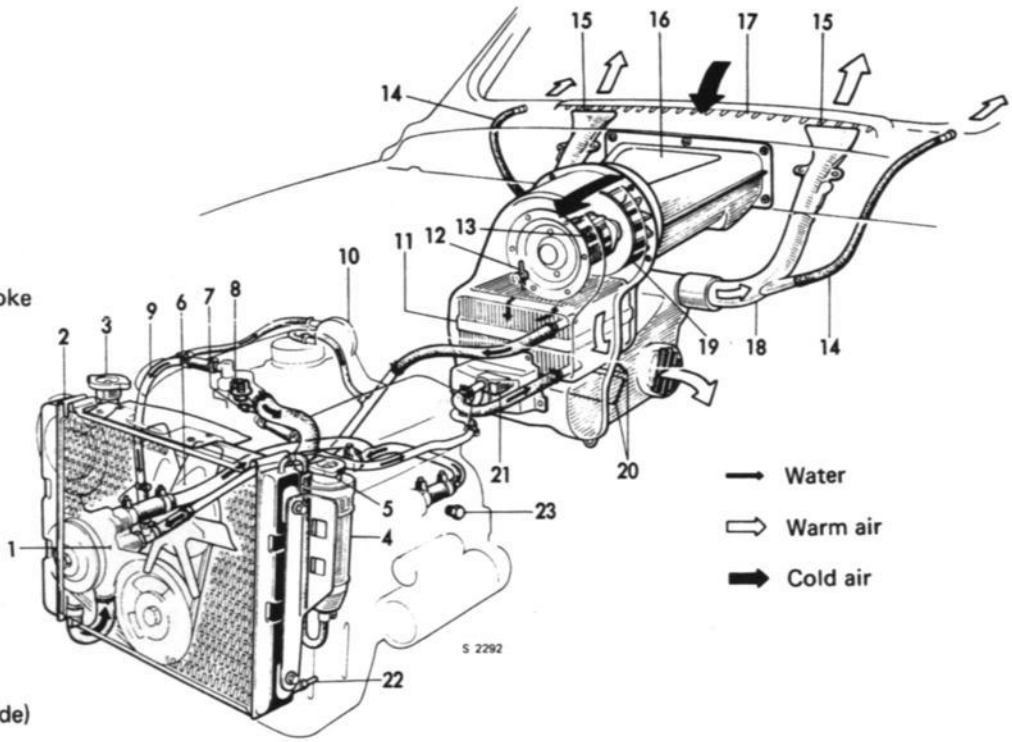

COOLING AND HEATING SYSTEM, AS FROM MODEL 1970

Draining the cooling system

1. Remove the filler cap of the radiator. As from the 1969 model, remove also the pressure cap of the expansion tank.
2. The coolant is first drained off through the drain valve in the lower part of the radiator. If the system is to be drained completely, loosen also the two hexagon plugs, one on each side of the lower part of the cylinder block.
   Empty the expansion tank by loosening it and then holding it so high that the fluid pours into the radiator.
3. The heat control of the fresh-air heater should point to maximum heat, otherwise the system cannot be fully drained.

Refilling the cooling system

Coolant is filled through the radiator opening. When doing this, make the heat control point to mamimum heat and open the bleeding nipple of the heat exchanger, in order to have the system filled completely. As from the 1969 model, fill the expansion tank up to the maximum mark or — at the most — 0.79 in. (20 mm) above it.

Once the cooling system is completely full, start the engine and run it at a varying speed for approx. a minute or until coolant escapes through the open bleeding nipple of the heat exchanger. Now, shut the bleeding nipple.

Pour additional coolant into the radiator, as required, then put both the caps on.

Only clean coolant is permissible. Never fill much of cold water, if the engine is hot, or the cylinder block may crack.

Check the level in the expansion tank after driving for a few days, as a complete bleeding is achieved only when the system has been warmed up and cooled off a few times.

Top up once the level is at the minimum mark again.

Use a recommended coolant only.

Cleaning the cooling system

The cooling system is cleaned in accordance with the following procedure:

1. Drain off the water.
2. Flush the system with clean water.
3. Fill the system with clean water to which a suitable commercial solvent has been added. Follow the solvent manufacture's instructions.
4. Shield the radiator and run the engine until warm.
5. Stop the engine and, after waiting a few minutes, drain off the water.
6. Flush the system again with clean water, treating the engine jacket and radiator separately. This time, flush against the normal direction of coolant flow, i.e. flush the engine jacket from the cylinder head and downwards, and the radiator through the lower connection pipe and upwards.
   Before flushing the system this time, back off the upper water neck and remove the thermostat.
7. Flush the heater element, also against the normal direction of circulation.
8. Check the function of the tap in the line to the heater element.
9. Refit the thermostat, water neck and hoses. Test the system for leaks. When cleaning the cooling system, also check that the radiator overflow pipe is not choked up with foreign matter. If the cleaning method described does not suffice to clear all deposits from the radiator, take the radiator out of the car and send it to a specialist.

Pressure testing the cooling system for leaks

It is often difficult to discover leakage in the cooling system, as the pressure in the system reaches its full value only while the car is being driven. One good method is to put the system under pressure with the aid of a pressure tester, whereupon the radiator, hoses and seals can be checked. The maximum permissible pressure is 14 psi (1 kg/cm²).

The opening pressure of the pressure cap can also be checked with the pressure tester. It should open at a pressure of 3.5—4.2 psi (0.25—0.30 kg/cm²) above atmospheric.

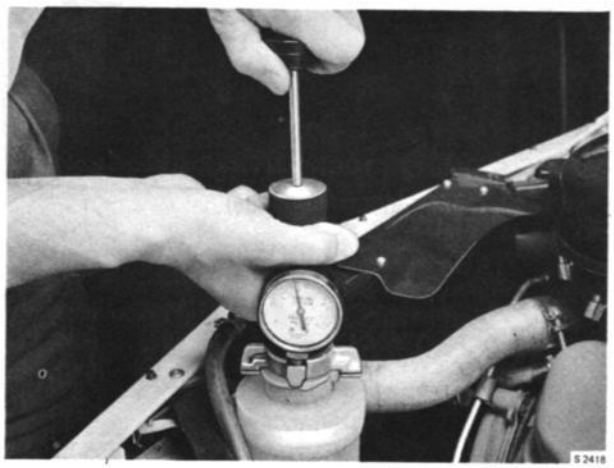

TESTING THE COOLING SYSTEM FOR LEAKS

CHECKING THE OPENING PRESSURE OF THE PRESSURE CAP

Testing the radiator for leaks

If the radiator is removed it can be tested for leaks by sealing the pipe connections, submerging it in water and testing with compressed air at max. 14 psi (1 atmos.).
A leaky radiator can be repaired by soldering. Patent sealers which are added to the cooling water should be used only in emergencies. These compounds can choke jackets and pipes and impede circulation. The cells of the radiator core may at times be so clogged up with dust, smashed insects, etc., that the air flow is reduced. The core must then be washed and blown clear with compressed air.

REMOVAL AND INSTALLATION OF WATER DISTRIBUTION PIPE OR REPLACEMENT OF WATER HOSES

Removal

1. Drain the coolant through the tap in the lower part of the radiator.
2. Slacken the three hose clamps so that the hoses remain on the water distribution tube.
3. Slacken the clamp which holds the water pipes together.
4. Remove the water distribution tube from the engine together with the hoses.

Installation

1. Moisten the hoses and pass them onto the water distribution pipe.
2. Hold the distribution pipe over the engine connection tail-pieces and slide on the hoses.
3. Tighten all hose clamps and pipe clamps.
4. Fill the system with coolant and bleed the system.

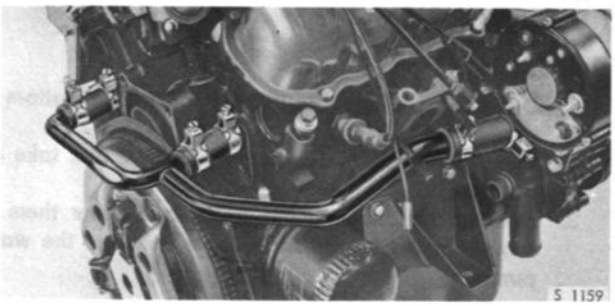

WATER DISTRIBUTION PIPE

Removal of radiator

Always take care when working with the radiator in order to avoid damage and leaks.

1. Remove the hood.
2. Drain off the water.
3. Disconnect the water hoses.
4. Back off the upper and lower radiator retaining screws.
5. Lift out the radiator.

Installation of radiator

1. Replace the radiator in position and screw in the upper and lower retaining screws.
2. Reconnect the hoses. Be sure to stretch them properly in order to avoid kinks. Refit the clamps.
3. Refill the radiator with water.
4. Remount the hood.

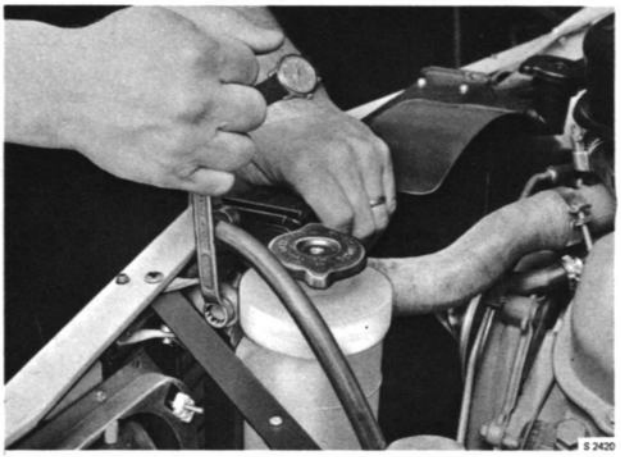

REMOVAL OF RADIATOR

REMOVAL AND INSTALLATION OF WATER PUMP

Removal

1. Drain the coolant through the tap at the bottom of of the radiator.
2. Remove the alternator and its bracket and take off the belt.
3. Slacken the water pump bolts, but allow them to remain in the transmission cover. Remove the water pump.

Installation

1. Remove all residual gasket fragments from the gasket surfaces.
2. Install the water pump with a new gasket. Refit the bolts.
3. Install the alternator and its bracket.
4. Put on the belt and tighten it with the alternator. Tighten the alternator brackets.
5. Fill the cooling system. Check for water leaks.

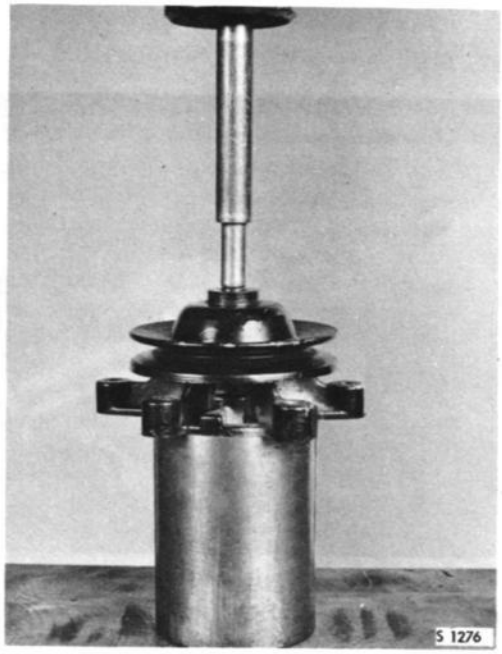

REMOVAL OF PUMP BEARING

OVERHAULING THE WATER PUMP WITH A REPAIR KIT

Disassembly

Using a drift, press the pump shaft with bearing and impeller simultaneously out of the pulley and pump housing. Note that the pressure base shall be so shaped that the impeller runs clear. Reject all parts except the pulley and the pump housing.

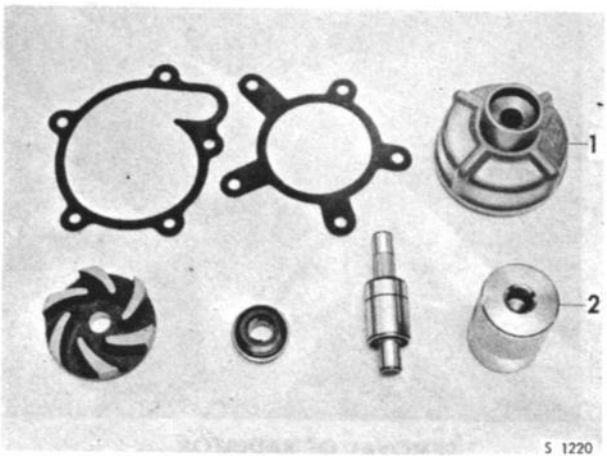

REPAIR KIT, WATER PUMP

1. Tool 786220
2. Tool 786219

Reassembly

1. Place the pump housing on tool 786220 and press the long end of the shaft into the the upper pump housing face with the aid of tool 786219 (short hole).
   To secure the new pump bearing in the old pump housing, the outer bearing race should be coated with Loctite prior to installation. Loctite is available as spare part No. 786051.
2. Place the housing with tool 786219 and 786220 respectively in the reverse position on the pressing table. Position the seal and press it in firmly with the small edge of tool 786220.

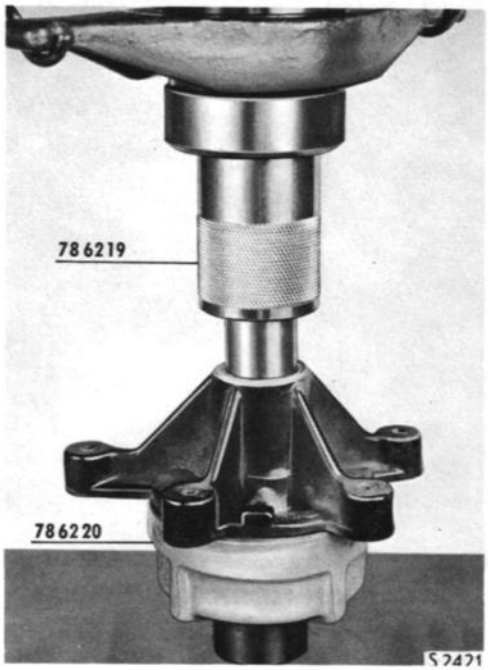

INSERTION OF PUMP BEARING

3. In the same position, mount the impeller on the pump shaft and press it in with tool 786220 in the same way until it bottoms out.
4. Install the pulley in tool 786219 and press with the aid of a mandrel the pump shaft into the pulley so that it protrudes 0.03—0.08 in. (0.8—2.0 mm).

> NOTE
> Press against the pump shaft and not against the impeller.

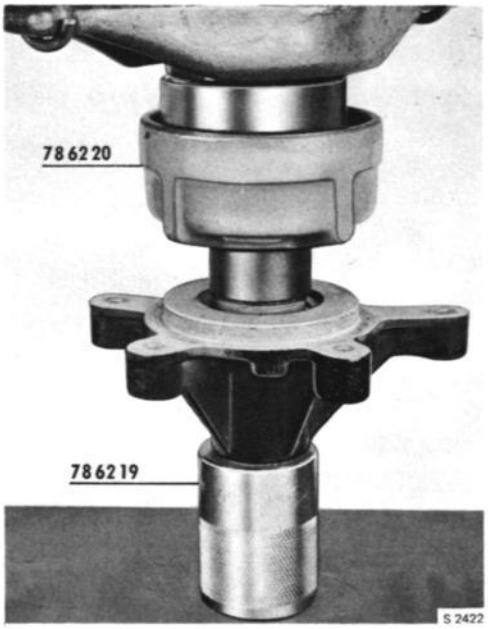

INSERTION OF PUMP SEAL

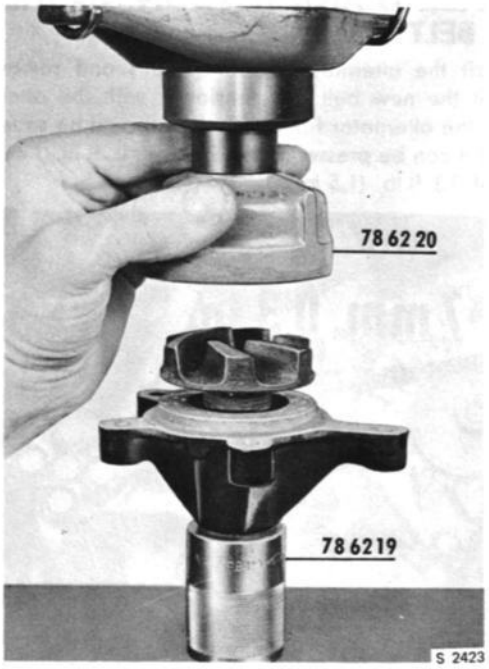

FITTING OF IMPELLER

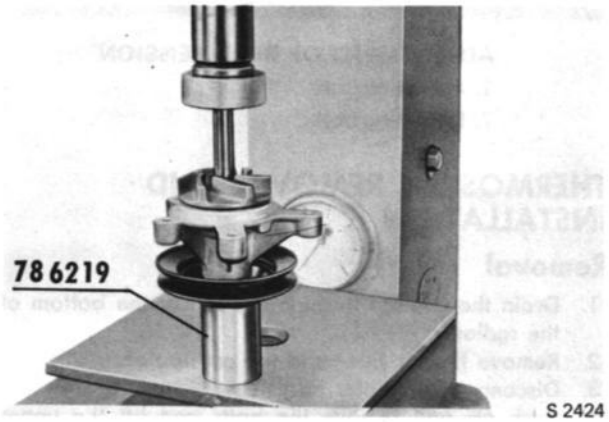

INSTALLATION OF PULLEY

Concerning replacement of fan bearing see "Transmission" page 215-2.

REPLACING AND TENSIONING THE FAN BELT

Back off the alternator retaining bolts and remove the belt. Fit the new belt and tension it with the alternator. Secure the alternator firmly. The belt should be so tensioned that it can be pressed down approx. 0.28 in. (7 mm) at a load of 3.3 ft.lb. (1,5 kp).

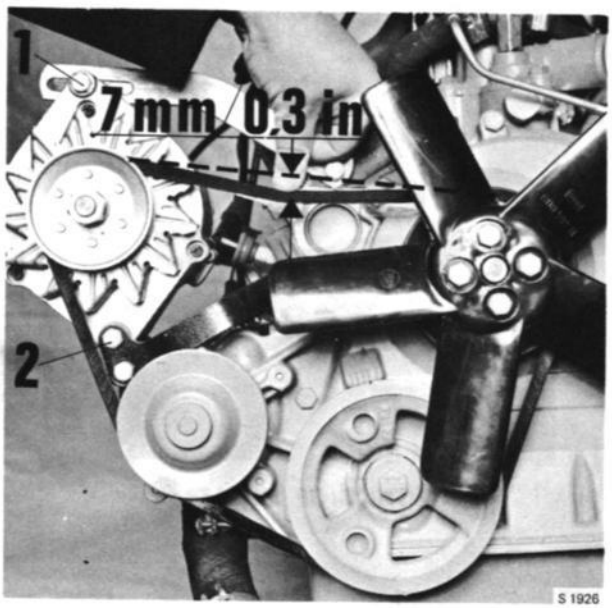

ADJUSTMENT OF BELT TENSION
1. Adjusting bolt
2. Retaining bolt

THERMOSTAT, REMOVAL AND INSTALLATION

Removal

1. Drain the coolant through the tap at the bottom of the radiator.
2. Remove the air filter and the carburetor.
3. Disconnect the water hoses.
4. Back off and remove the bolts and lift the upper part of the thermostat housing. Remove the thermostat.

Reassembly

1. Clean the thermostat housing gasket surface to remove all residual gasket fragments.

> NOTE
> The thermostat retaining bracket must be perpendicular to the longitudinal axis of the car, as otherwise the bracket will be squeezed by the water outlet tailpiece.

2. Insert the thermostat, position a new gasket and screw on the upper part.
3. Reconnect the water hoses.
4. Reinstall the air filter and the carburetor.
5. Fill the system with coolant and bleed the system.

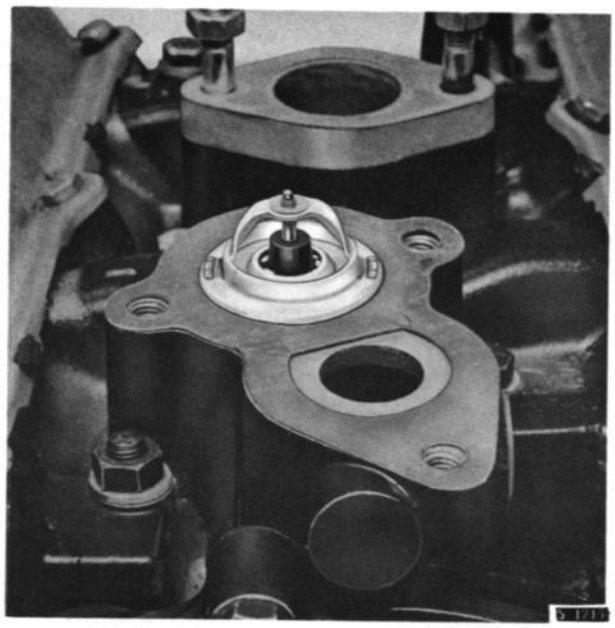

INSTALLATION POSITION, THERMOSTAT

INSPECTION OF REMOVED THERMOSTAT

Place the thermostat together with a thermometer in a vessel full of water. Heat the water to the temperature specified for opening (see group 0). Check that the thermostat closes in cold water. A faulty thermostat cannot be repaired and must be replaced by a new one.

SERVICE ENGINE

Service engines supplied as a spare part will consist of a cylinder block with pistons and axles. These engines will be delivered with a provisional plastic plug in the hole in the cylinder block where the hose for the air filter is connected in the case of semi-enclosed crankcase ventilation. This hole should either be sealed with a cover or else a connection pipe must be fitted, depending on the type of crankcase ventilation with which the exchanged engine was equipped.

If the exchanged engine had totally enclosed crankcase ventilation, the hole in the cylinder block must be sealed with a cover instead of with the plastic plug. See the Spare parts list. The cover must be mounted with its cupped side facing downwards. Press the cover in about 0.049—0.089 in. (1.25—2.25 mm) under the face of the cylinder block. Use sealing compound when fitting the cover.

If the exchange engine had semi-enclosed crankcase ventilation, a connection pipe must be installed in place of the plastic plug. See the Spare parts list. Use sealing compound.

Exchange engine

For all SAAB car models with V4-engine, there is a new exchange engine. The engine is factory-new, thus both cylinder bore and crankshaft are of standard dimensions. With the exchange engine go the following parts: cylinder head, oil pan, oil pump, Induction manifold, water pump, oil filter, and transmission cover, but not: carburetor, fuel pump, flywheel, clutch, thermostat housing, fan and electrical equipment.

CONTENTS

DESCRIPTION

The electrical system works on 12 volts and comprises the following units:

Battery, starter, generator, voltage regulator, ignition distributor, ignition coil, spark plugs, road lights and interior lighting, electric clock (model 1967), warning lamps, temperature transmitter , fuel gauge and -transmitter, manoeuvre relay for headlights, oil-pressure switch, direction indicators, flasher unit, windshield wipers, horns, fan motor, stop-light switch, cable harnesses, wiring, switches and fuses.

The Monte Carlo is also provided with a manoeuvre relay and dimming relay, electric windshield washer, back-up light, fog light and long-range light.

From model 1967 all USA versions have a warning flasher system.

From model 1969 are all versions equipped with this system. From the 1968 model, all cars are equipped with electric windshield washer. From the 1968 model on, all Saab cars are equipped with a brake warning contact.

As from the 1971 model, headlamp wipers and-washers are provided for certain markets.

Battery

The 12-volt, 6-cell lead battery has a capacity of 44 amp-hours (Ah). It is placed on a shelf on the righthand wheel house. The negative cable is grounded to the body.

L.H.D. cars as from model 1971 has 60 Ah batteries.

Generator

The generator is of the AC type. An indicator light shows whether the generator is charging or not.

Starter

The starter up to and includ. the 1968 model has a rated output of 0.8 h.p. The pinion is engaged by means of a solenoid switch that is turned on with the ignition key.

As from the 1969 model, the starter has a rated output of 1.0 h.p.

Ignition system

The engine is equipped with a battery ignition system which, apart from the battery, comprises an ignition coil and a distributor equipped with a centrifugal governor in combination with a vacuum governor.

The ignition is switched on with the ignition key.

The suppressors which eliminate radio interference are mounted in the rotor and in the ignition cable terminals.

Lighting

The road lights comprise the headlights, front direction indicators and parking lights, the number-plate light, stop lights, rear direction indicators, and tail lights.

The headlight inserts can easily be adjusted both vertically and laterally. Lights on/off by means of a switch on the steering column stand. From the 1968 model the switch is placed on the instrument panel. Up to and including the 1968 model, the headlights are dimmed with a footoperated switch.

In the Monte Carlo[1]), the R.H.D. Saab 95/96 and as from the 1969 model also the L.H.D. cars, there is a device that provides headlight flashing and dimming via relays operated by moving the direction indicator switch lever toward the wheel.

Up to and including the 1968 model, all cars of the USA version have foot operated dimmer and no device for headlight flashing. As from the 1969 model, all cars have a handoperated device for dimming and for headlight flashing.

A warning lamp on the instrument panel glows when the headlights are in high beam.

The parking lights are always on together with the headlights, regardless of whether these are dimmed or not.

The headlight/parking-light switch knob can be turned to regulate the intensity of the instrument lighting.

From the 1968 model, the intensity of the instrument panel lighting is regulated by means of a rheostat placed to the left of the light switch.

Miscellaneous electrical equipment

The interior lighting consists of a dome lamp operated by a switch on the lamp itself and by door switches.

The direction indicators are operated by means of an automatically re-set switch located under the steering wheel. On the Monte Carlo, the R.H.D. Saab 95/96 and as from the 1969 model also the L.H.D. cars 95/96, this same switch also serves as the dimmer switch. A green warning lamp on the instrument panel indicates when the flashers are operating. The horns are operated with a ring on the steering wheel. They emit a dual-tone signal composed of harmonized high and low note. From the 1968 model, the horns are operated with the same lever as windshield wipers and electric windshield washer. As from the 1970 model, the horns are operated with the aid of buttons in the safety pad on the steering wheel.

The two windshield wipers are driven, at two speeds, by a motor via twin linkages. They are turned on and off with a switch on the instrument panel. (As from the 1968 model, with a switch beneath the steering wheel). This switch is combined with the windshield washer control. The same switch is also used to operate the headlamp wipers and -washers on cars which, as from the 1971 model, are provided with this equipment.

Wiring and fuses

The various wires from the battery or generator to the different electric-power consumers are gathered into a harness network that is arranged in groups. The individual wires are color-marked for easy identification throughout the network.

The wiring connections consist of solderless AMP connectors. Fuses are provided to protect wiring etc. from abnormally high current intensities (due to short circuits, for instance) and to reduce fire hazards. The fuses are grouped in a fuse box located to the right on the instrument panel in the engine compartment. A spare fuse is provided for extra equipment.

Brake warning system

Faults in the brake system in the form of leakage or neglected adjustment of the rear brakes, are indicated

[1]) Excl. the USA version.

by the brake warning light located in the speedometer. The lamp is lighted by a contact placed above the brake pedal.

Warning flasher

As from the 1969 model all cars are equipped with a warning flasher. The switch is located on the steering column stand. When the knob is pulled out, all the direction indicator lights and connected indicators are flashing.

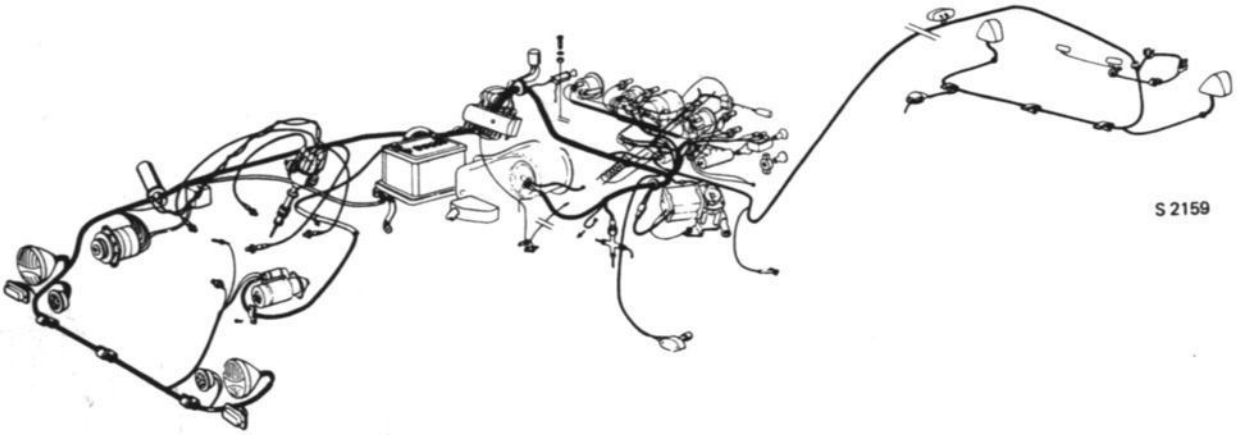

ELECTRICAL SYSTEM, SAAB 96

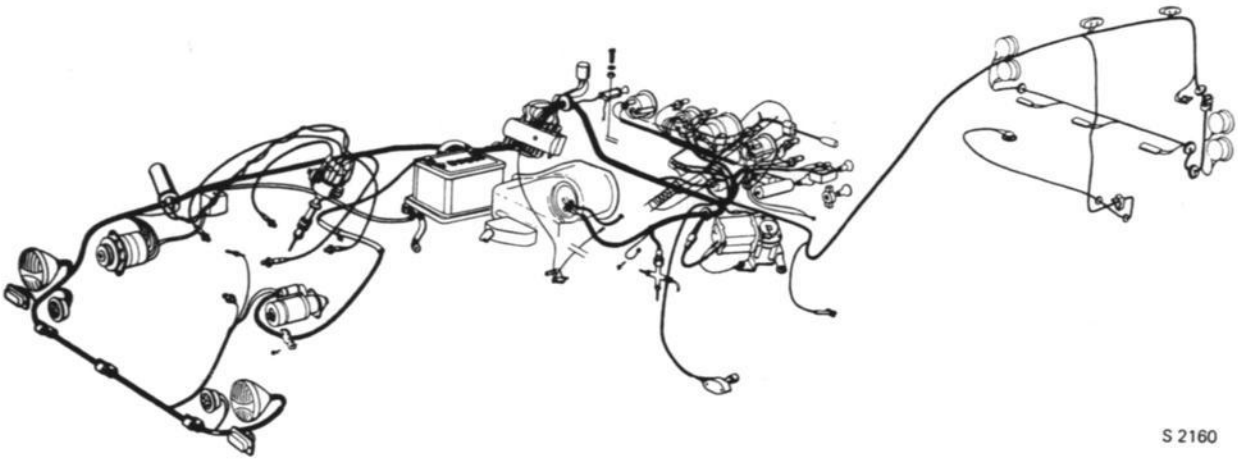

ELECTRICAL SYSTEM, SAAB 95

BATTERY

General

The battery is a 12-volt lead accumulator with 6 cells, the working voltage per cell being roughly 2 volts. The electrolyte is diluted sulfuric acid with a spec. gravity of 1.28 at 68°F (20°C) when the battery is fully charged. All L.H.D. cars up to and incl. model 1970 are equipped with 44 Ah batteries. As from model 1971 L.H.D. cars are equipped with 60 Ah batteries and R.H.D. cars with 44 Ah. The corresponding current output is 2,2 amp. under 20 hours. The positive pole of the battery is connected to the starter and other consumer units, while the negative pole is earthed through the chassis.

Removal and installation

To remove the battery from the car, first disconnect the negative cable, in order to prevent shorting, and then the positive cable. Note! Engine with an alternator must be stopped before detachment of cable.
Having done this, back off the two wing nuts on the holder and lift the battery out.
Before reinstalling, make sure that the outside of the battery is clean and that posts and terminals are also clean, thus ensuring good contact. When the battery is in place again, coat the posts and terminals with acid-free vaseline.

Battery maintenance

The condition of the battery determines the ease of starting, and regular testing and attention is therefore essential. Negligence in this respect may cause starting difficulties, particularly in the winter, when starting loads are higher and battery capacity lower because of the low temperature. An insufficiently charged battery is liable to freeze.

Electrolyte level

Evaporation and decomposition of electrolyte water will cause the level to decrease gradually. Top up, using distilled water only, until the electrolyte level is approx. 0.4 in. (10mm) above the plates.
Sulfuric acid may be added only to compensate for leakage or to refill the battery if it has been emptied. The specific gravity must be checked whenever sulfuric acid has been refilled.

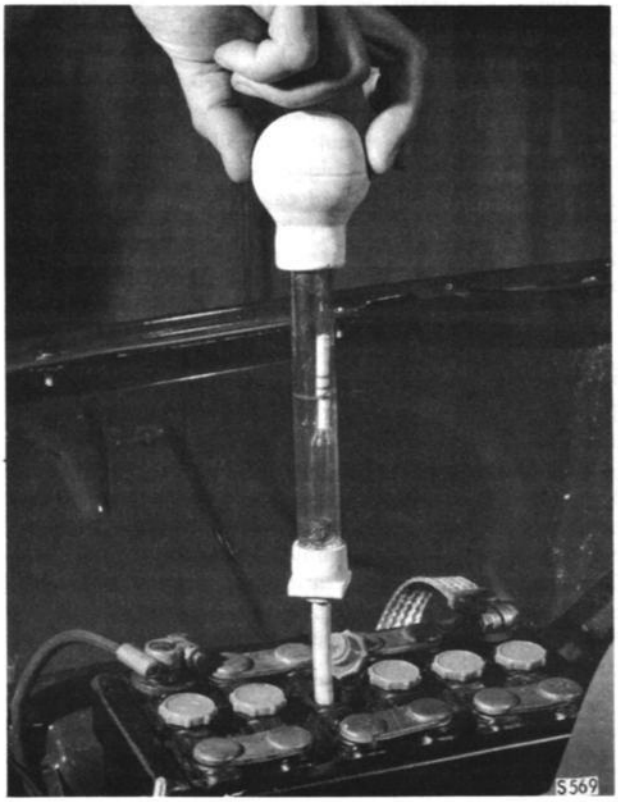

CHECKING THE BATTERY WITH A SYRINGE

Specific gravity of electrolyte

The specific gravity of the electrolyte can be checked with a syringe-type hydrometer. The result of the test indicates the charging condition of the battery. See table below.

Charging condition	Spec. gravity of electrolyte
Fully charged	approx. 1.28
Half charged	approx. 1.21
Discharged	approx. 1.12

Cell voltage

A more accurate test of the state of the battery is made by using a cell tester, which consists of a voltmeter and a resistance, connected in parallel, giving a load of 80—100 amps.
Each cell is tested individually by placing the tips of the cell tester against the cell terminals.
The indicated voltage should not fall below 1.6 V after 10—15 sec. discharge. A bigger voltage drop is a sign of a defective or discharged cell.
The normal no-load cell voltage is 2 volts, and the difference in voltage between any two cells should not exceed 0.2 volts.

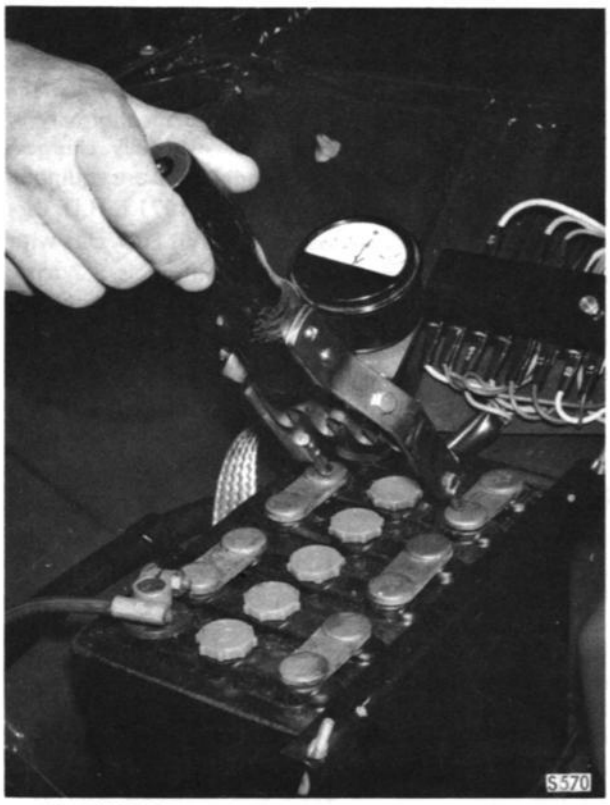

CHECKING THE BATTERY WITH A CELL TESTER

Charging

The charging rate must be adapted to the capacity of the battery and should not exceed 2.5 amps in the case of a 44 Ah battery.
The battery is fully charged when the cell voltage amounts to 2.5—2.7 volts without load and has remained constant for the last three hours of charging.
Decomposition of water causes the electrolyte to boil, and in view of this the plugs should be unscrewed while the battery is being charged.

CAUTION

Do not misconnect the battery. Reversing the pole connections, even momentarily, will damage the alternator rectifier. Connect the positive cable to the positive pole of the battery (both marked +) and the negative cable (ground lead) to the negative pole (both marked −). If an external battery is temporarily connected to the car battery, connect the poles positive-to-positive and negative-to-negative. The battery must not be connected to or disconnected from the electrical system of the car while the engine is urnning. When quick-charging the battery, first disconnect the positive cable.

Batteries of more recent design have covered cell terminals which makes it impossible to test separate cells. The rest voltage of the battery can, however, be measured by connecting a voltmeter between the positive and negative terminals.

Alternator up to and incl. chassis No. 95/47295, 96/443386

General

The SAAB V4 is equipped with an alternator. The most important advantages of the alternator compared with the D.C. generator are the following:

The charging current commences earlier in an alternator, and feeds current to battery and consumers already at engine idling speed.

Return current relay and current regulator are missing. Only a voltage regulator is needed.

> IMPORTANT
>
> The battery must always be connected, when the alternator is running.
>
> Do n o t mix up the battery connections, confusion leads to serious damage to the alternator.

The alternator requires very little maintenance, because carbon brushes and commutators are not needed for the output current. In consequence, periodical attention is not prescribed for this type of generator. Repair of the alternator should be made by a specialized service garage, as it is most important that disassembly and testing is made in the proper way, for even a minor inadequacy may result in a serious damage.

> NOTE
>
> For excitation of the alternator, use the charge indicator light. This must be of minimum 2 watts.

> WARNING
>
> When electrowelding on a car equipped with an alternator, the ground connection shall be disconnected before. Otherwise damage vill be caused to the rectifiers.

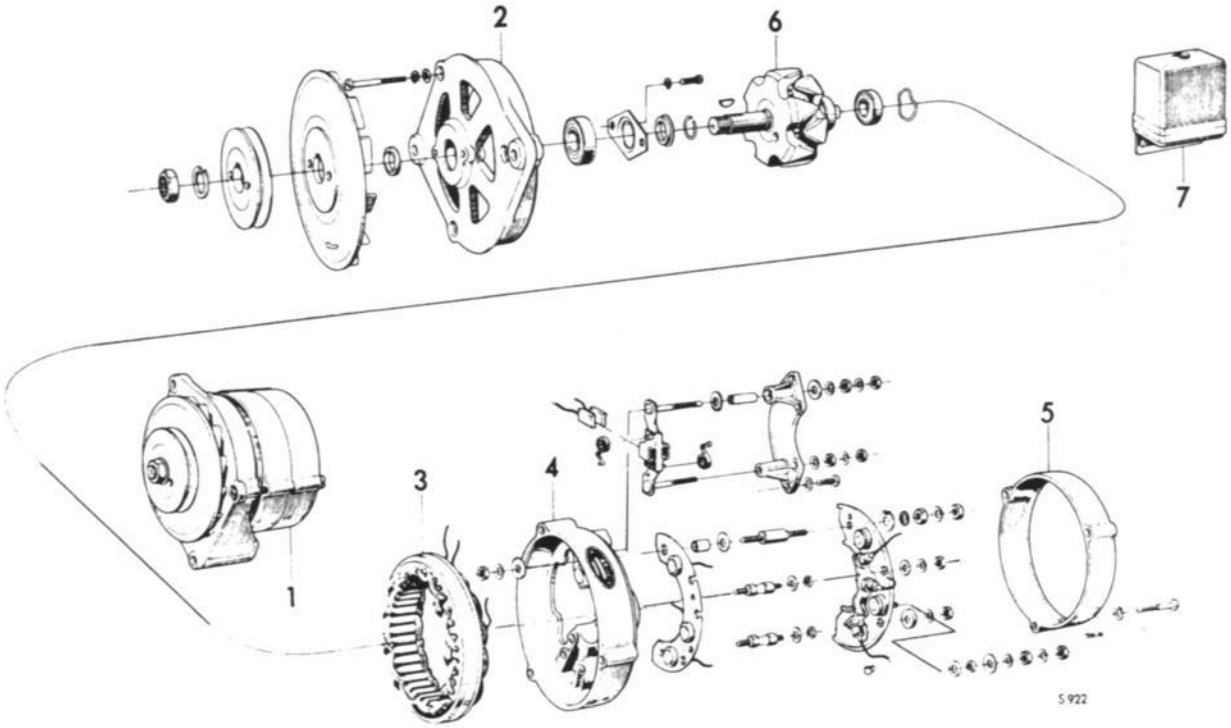

ALTERNATOR

1. Alternator assy
2. Bearing, gear side
3. Stator
4. Slip-ring bearing
5. Protective ring
6. Rotor
7. Voltage regulator

Designation

The Bosch designation of the alternator is
K 1 ←→ 14 V 35 A 20
The meaning of the type designation is:

K 1 ←→ 14V35 A 20

- 20 — × 100 = 2000 rpm (rpm for 2/3 of max. current output)
- A — Maximum current
- 35 — Maximum voltage
- 14 — Direction of rotation
- 1 — Design of alternator[1])
- K — Pole housing diameter Ø

[1]) Design: 1 . . . fork or claw type rotor, 2 . . . single pole rotor, 3 . . . brushless.

Description – Internal Wiring

The Alternator K 1 ←→ 14 V 35 A 20 is for 12 V and internally air-cooled, has a 12-pole, fork-type rotor and is equipped with 6 silicon diodes for rectification. To each of the three winding loops is connected an exciter diode. Their common junction constitutes the terminal D +/61.
The 6 rectification diodes are arranged as an A.C. bridge-coupling, i.e. 3 diodes are connected for normal polarity (anode on supply terminal), and 3 diodes for reversed polarity (anode on housing).
According to polarity, the diode carrier is fitted insulated from ground or direct connected to a ground contact, respectively. Between these two carriers is located insulated the carrier of the exciter diode.

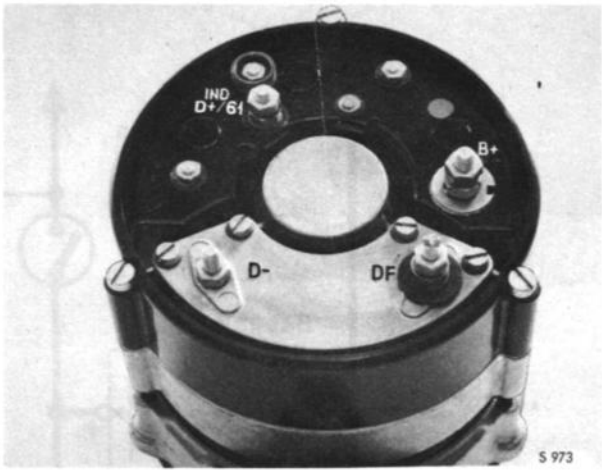

TERMINAL END OF ALTERNATOR

Terminals

D +/61: Output of exciter diodes, connection of regulator D + and of charge indicator light.
DF : Input of exciter coil, connection of regulator DF
B + : Battery connection
D — : Ground, connection to regulator D —.

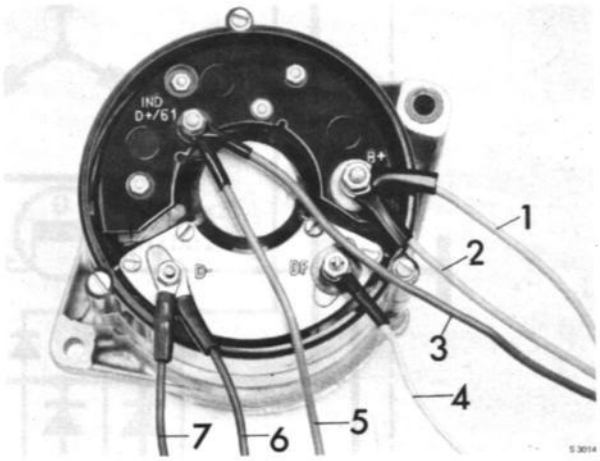

CABLE CONNECTIONS AND CABLE COLOURS, ALTERNATOR UP TO AND INCLUDING CHASSIS NO. 95/47295, 96/443386

1. 85 grey to B+
2. 74 grey to B+
3. 72 red to D+/61
4. 73 yellow to DF
5. 61 red to D+/61
6. 49 black to D–
7. 47 black to D–

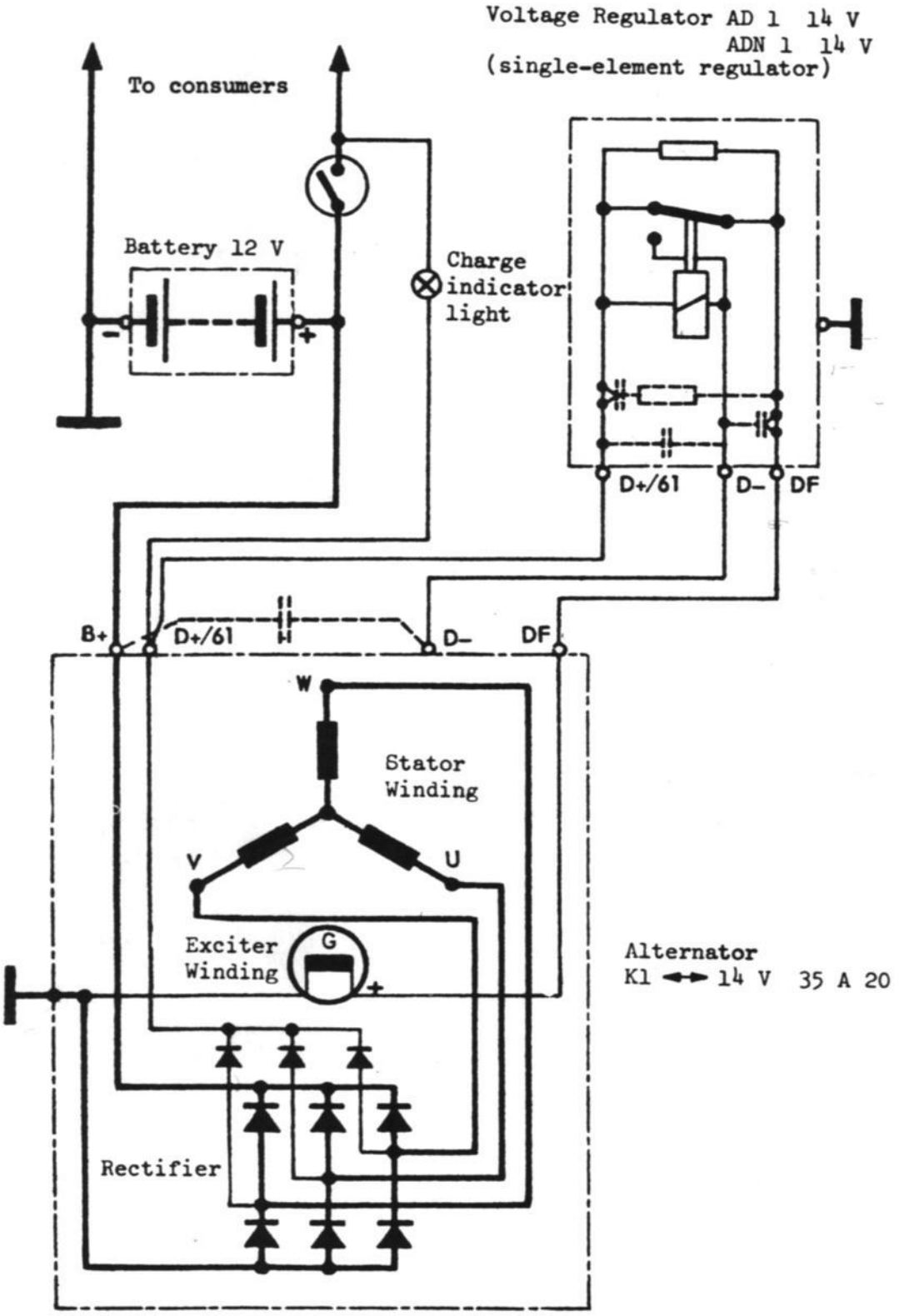

WIRING DIAGRAM FOR A. C. ALTERNATOR

The stator windings are star-coupled (see wiring diagram). The rotor carries the ring-shaped exciter coil and is of the fork-type execution, one fork having north polarity (6 poles) and the other south polarity (6 poles). The two forks then give the assembled rotor alternately a south and a north pole.
The exciter coil ends are connected to the slip-rings to receive the exciter current.

Terminals

D +/61: Output of exciter diodes, connection of regulator D + and of charge indicator light.
DF : Input of exciter coil, connection of regulator DF
B + : Battery connection
D — : Ground, connection to regulator D —.

Disassembly of alternator for renewal of bearing

1. Hold the belt pulley with a suitable tool, and loosen the nut with a 22 mm open end wrench. Loosen the belt pulley.
2. On the drive end plate, mark out the location of the attachment ear. Remove the cover ring, and the brush holder plate — the carbon brushes are going with it. See fig.
3. Loosen the fixing screws of the drive end plate, and take out of the stator the rotor together with the drive end plate. See fig.
4. Place the drive end plate on a suitable support, and press out the rotor — gently. Now it is possible to remove the bearing. Take care that the rotor — when same comes loose from the drive end plate — not fall down and be damaged.
5. Remove the ball bearing at the slip-ring end, by means of a suitable puller.

Reassembly of alternator

1. Fill the ball bearing with Bosch grease Ft 1 v 33. Press the ball bearing into the drive end plate, the enclosed side facing the drive side.
2. Ease the drive end plate onto the rotor.
3. By pressing, fasten the ball bearing to the slip-ring end. See fig.
4. Put the rotor in, and assemble the alternator by screwing. When doing this, make sure that the drive end plate gets correctly positioned as regards the slip-ring end plate. Fit the brush holder plate and the cover ring. Fasten the belt pulley by screwing, torque 25—29 ft.-lb. (3.5—4.0 kpm).

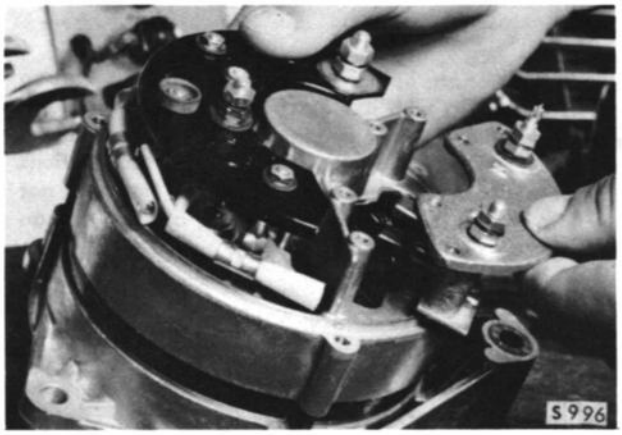

REMOVAL OF BRUSH HOLDER PLATE

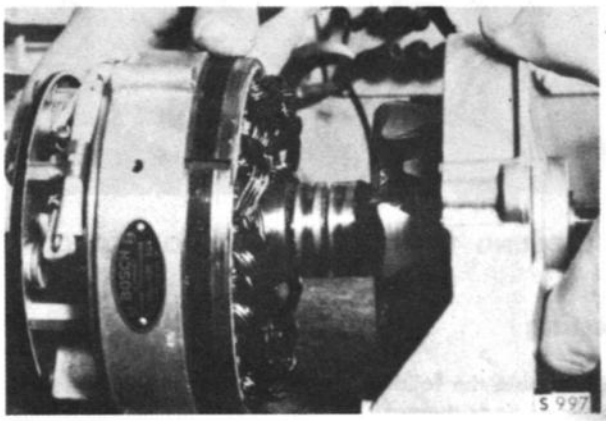

REMOVAL OF DRIVE END PLATE AND ROTOR

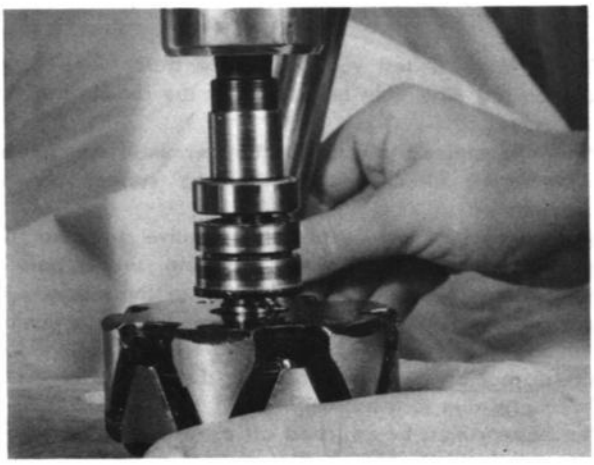

PRESSING IN THE SLIP-RING END BEARINGS

Renewal of carbon brushes

Remove the brush holder plate, see fig., the carbon brushes are going with it. Detach the cable connections, by heating, then it is possible to remove the carbon brushes. When soldering the carbon-brush connections on, it is necessary to make sure that the tin does not flow into the cable. Minimum length of the carbon brushes to be approx. 0.34 in. (9 mm).

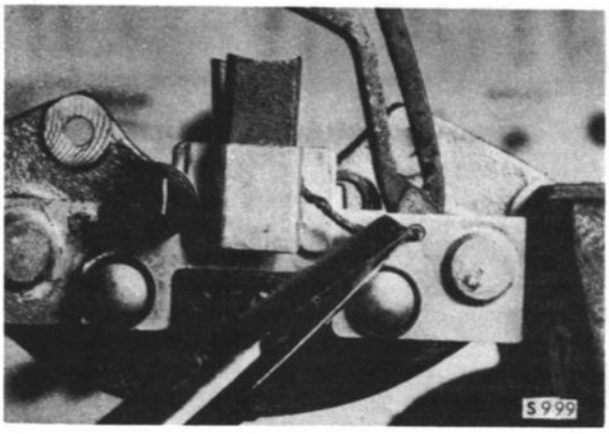

SOLDERING THE CARBON BRUSH CONNECTION

Testing

Please note the following points before testing the alternator or parts thereof:

Diodes may only be tested with D.C. voltages not exceeding 24 V.

Glim glowing lamps (110 V or 220 V) may not be used for insulation or short circuit tests, if the diodes are in the circuit.

The 80 V 40 W test voltage for the stator winding insulation test may only be applied if the diodes are disconnected.

While the engine is running, battery terminals may not be disconnected to check the charging current on the vehicle.

Semi-conductors are extremely sensitive to heat. To prevent excessive heat when soldering, use a pair of flat pliers to hold the supply wire near the diode. (Use a hot iron and be as quick as possible.) Any mechanical damage to the diode connecting wires must be avoided, e.g. do not bend or load the wire directly on the diode (breakage due to vibration).

The battery must be switched off or disconnected before any repair work commences on the alternator, either while in the vehicle or on the test bench.

Only instruments having not more than 8 V power supply may be used for measuring resistances on the assembled alternator.

On the test bench, the alternator must be driven with its own pulley. All connections must be made with correct size cable shoes, or on the regulator with spade terminals. Do not improvise the battery connection.

A 12 V battery must be connected parallel to the alternator before any testing commences except for the regulating voltage test and the nominal voltage and speed tests. The battery will act as a buffer and smooth off any peak voltages arising from switching on or off the load.

Peak voltages exceeding the maximum permissible value will damage the rectification effect of diodes. The maximum permissible peak voltage on silicon diodes is approx. 50 V.

EXCITATION

As opposed to D.C. generators, alternators can lose their selfexciting properties after long storage. Therefore a charge indicator light of 12 V and minimum 2 W must be connected between terminals 61 and B + according to wiring diagram. The pre-exciting current will then flow through the charge indicator light, D+/61 on the alternator, D+/61 on the regulator, the closed regulator contacts and DF to the exciter coil fitted to the rotor. It is most important that the charge indicator light bulb is minimum 2 W. Self-exciting commences as soon as the exciter diodes are conducting at about 1 to 2 volts. From there on, the voltage increases rapidly, the voltage difference on the charge indicator light bulb decreases, and the bulb will go out as soon as battery voltage is achieved.

MOUNTNG OF THE ALTERNATOR

The shape of the alternator housing does not permit a perfect mounting on the V block of the test bench. Therefore, a special mounting unit is available.

TESTING WITH REGULATOR

Mount the regulator to the test bench. Connect the alternator to the voltage regulator. Do not interchange connections! Connect the exciter current ammeter to terminal DF on alternator. Switch on battery; switch on charge indicator light. Connect voltmeter to terminal B+. To pre-excite the alternator, increase the speed from zero until the output voltage is approx. 14 V and decrease speed again.

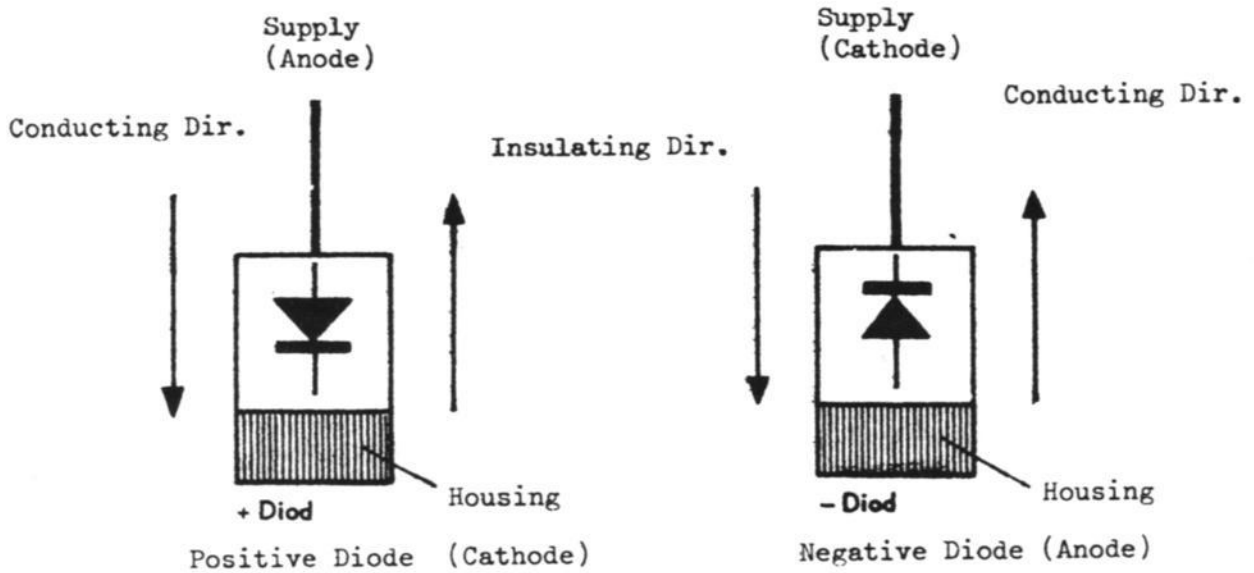

TESTING THE REGULATING VOLTAGE AT HALF EXCITER CURRENT.
Connect voltmeter to terminal D +/61.
Run the still excited alternator without load and without battery. Increase speed until exciter current falls to half its maximum value. Check the voltage. Regulating voltage 13.5 to 14.2 V (20°C = 68°F.

TESTING THE NOMINAL VOLTAGE SPEED
Connect Voltmeter to B+. The alternator should also run without load and without battery. Adjust the speed until the output voltage is exactly 12 V. Check with tachometer.
Nominal voltage speed 800—900 rpm.

TESTING 2/3 OF MAXIMUM OUTPUT CURRENT
Switch on battery and load the alternator. Adjust the speed to exactly 2000 rpm. The alternator output must now be 2/3 of maximum current = 24 A.

TESTING THE RPM AT MAXIMUM OUTPUT
Leave the battery switched on. Increase the load on alternator and let it warm up. Increase speed. Max. output (35 A—14 V) must be achieved at 2700—3700 rpm (warm).

Testing the Components

TESTING OF DIODES
Use only a test lamp not exceeding 24 V or an Ohmmeter.
Always disconnect the diodes from the stator windings before individual testing commences. Due to the 3-phase bridge connection of the rectifier, a foulty diode could otherwise not be detected. The positive diodes connected between B+ and phase are conducting from supply wire to the housing and insulate in the reverse direction. The diodes between phase and B— (reversed polarity) are conducting from housing to supply and insulate from supply to housing. (See fig.)
Connect the test lamp (up to 24 V) in series to the diode to be tested. On diodes of normal polarity, the test lamp will light up if B+ is connected to the anode. The lamp must not light up if B+ is applied to the housing (cathode).
On diodes of reversed polarity, the bulb must light up if B+ is connected to the supply (cathode) but not if the direction of current is reversed. Faults of diodes can be open circuit in the conducting direction due to excessive current and too much heat or conducting in both directions, in most cases due to excessive voltages during operation.

TESTING OF DIODES WITH OHM-METER

Similarly, diodes can be tested with an Ohm-meter. The resistance of a good diode is very small in the conducting direction (e.g. a few Ohms), whereas the resistance in the insulating direction is very much higher (e.g. a few K Ohms).

TESTING OF STATOR

Short Circuit to Ground (diodes unsoldered)

Short circuit to ground of stators can be tested as usual with a test lamp up to 40 V

With diodes connected, short circuit to ground can be tested if their insulating direction is considered. The positive terminal of the tester must be applied to the stator winding and the negative to the housing.

Note the test voltage: not more than 24 V.

SHORT CIRCUIT OF WINDINGS (DIODES UNSOLDERED)

As for D.C. generators a short circuit tester can be used to test the stator. However, this test is only possible if the alternator is dismantled, i.e. the stator must be removed.

Furthermore, short circuit of windings can also be ascertained with an Ohm-meter. Three measurements must be taken, one each on every two-phase wires: U – V, U – W and V – W.

The resistance value of each measurement must be the same, 0.20–0.22 Ohms (at 20°C = 68°F).

TESTING THE EXCITER WINDING (ROTOR)

SHORT CIRCUIT TO GROUND

The Testers (test voltage 40 V) are suitable to test the insulation of exciter winding and slip rings.

SHORT CIRCUIT OF WINDINGS

Check the exciter winding resistance from slip ring to slip ring. The resistance value must be 4.0–4.4 Ohms.

ALTERNATOR
As from chassis No. 95/47.296, 96/443.387

General

During driving, the alternator supplies the current required by the various consumer units and also charges the battery.

IMPORTANT

The battery must always be connected, when the alternator is running.
Do not mix up the battery connections, confusion leads to serious damage to the alternator.
The alternator requires very little maintenance, because carbon brushes and commutators are not needed for the output current.
The alternator has two slip rings respectively two carbon brushes to transmit exciting current to the alternator field-windings on the rotor.
The load on these brushes and slip rings is, however, that light that normally they do not require supervision.
Maintenance with regular intervals is therefore not prescribed for this alternator. Repair of the A.C. generator should be carried out by a specialized service garage, as it is vital that disassembly and testing are carried out correctly. Even minor mistakes may cause great damage.

The alternator pulley is finned to induce a current of air through the alternator, thus dispelling the heat developed there while it is running.
The alternator is driven by a belt from the crankshaft belt pulley, and is located to the right of the engine.

NOTE

For exitation of the alternator, use the charge indicator light. This must be of 1,2—2,0 watts.

WARNING

When electrowelding on a car equipped with an alternator, the battery ground- and all connections on the alternator shall be disconnected before. Otherwise damage will be caused to the rectifier diodes.

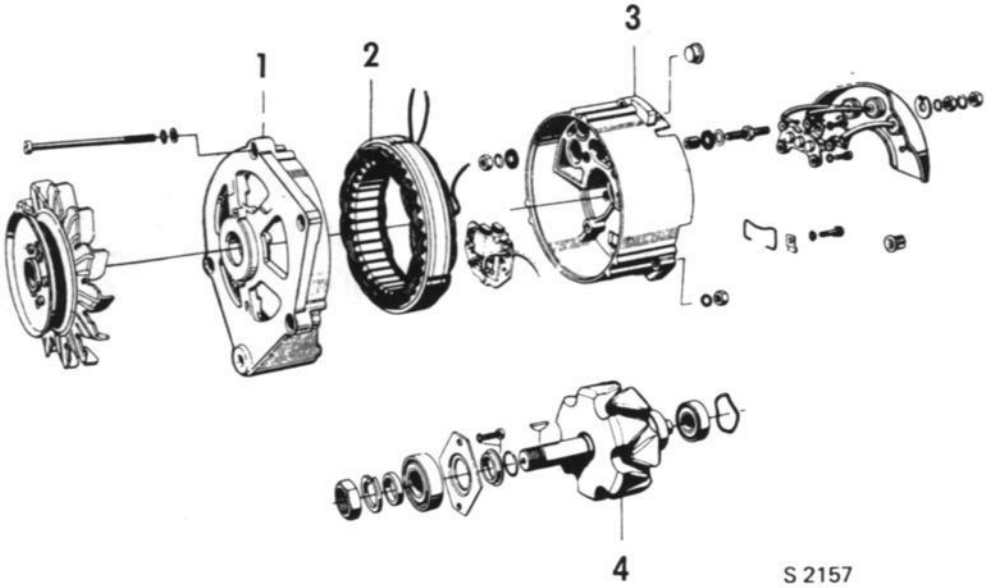

ALTERNATOR

1. Drive end frame
2. Stator
3. Slip ring bearing
4. Rotor

Designation

The Bosch designation of the alternator is
K 1 ←→ 14 V 35 A 20
The meaning of the type designation is:

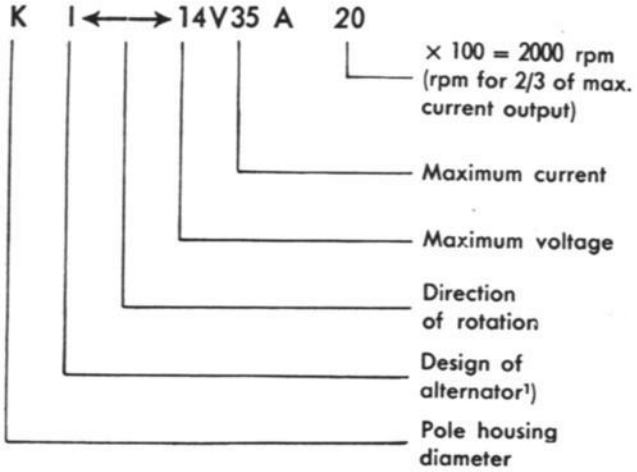

¹) Design: 1 ... fork or claw type rotor, 2 ... single pole rotor, 3 ... no slip rings

Description – Internal Wiring

The Alternator is for 12 V and internally air-cooled, has a 12-pole; fork-type rotor and is equipped with 6 silicon diodes for rectification. To each of the three stator winding loops is connected an exciter diode. Their common junction constitutes the terminal D+.
The 6 rectification diodes are arranged as an A.C. bridge-coupling, i.e. 3 diodes are connected for normal polarity (anode on supply terminal), and 3 diodes for reversed polarity (anode on housing).
According to polarity, the diode carrier is fitted insulated from ground or direct connected to a ground contact, respectively. Between these two carriers is located insulated the carrier of the exciter diode.
The stator winding are star-coupled (see wiring diagram).
The rotor carries the ring-shaped exciter coil and is of the fork-type design, one fork having north polarity and the other south polarity.
The exciter coil ends are connected to the slip-rings to receive the exciter current.

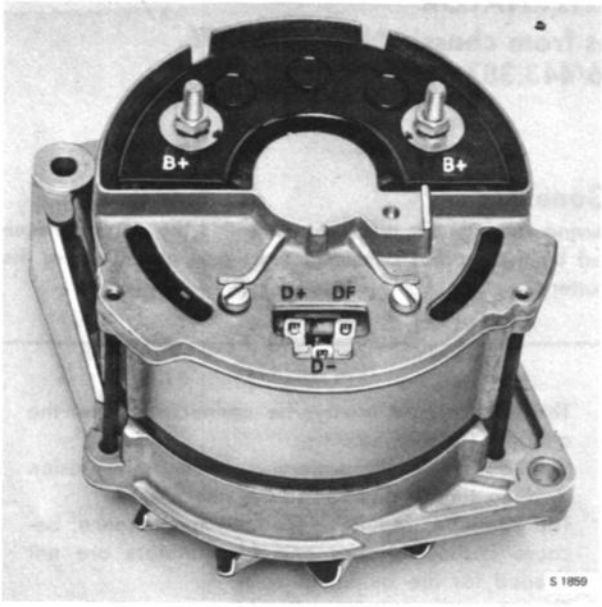

TERMINAL END OF ALTERNATOR

Terminals

D+: Output of exciter diodes, connection of regulator D+.
DF : Connection to the exciter coil and for the DF of the regulator.
B+ : Battery connection.
The control lamp is connected to D+ on the voltage regulator. Connection to the D– of the regulator is made via a cable in the 3-pole connector.
Besides, ground connection is established via a cable attached with a M6-screw in the screw hole next to the slip ring end bracket. (With this screw is also attached a possible condenser).

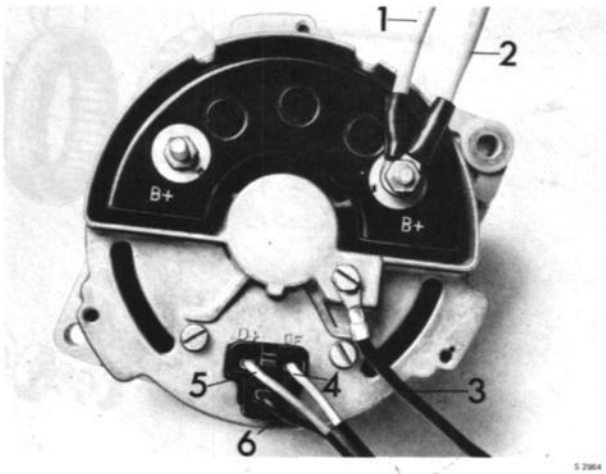

CABLE CONNECTIONS AND CABLE COLOURS, ALTERNATOR AS FROM CHASSIS NO. 95/47296, 96/443387

1. 85 grey to B+
2. 74 grey to B+
3. Black to ground (only model 1970)
4. 73 yellow to DF
5. 72e red to D+
6. 49 black to D–

Wiring diagram

When the ignition key is turned to ignition position, the circuit is closed.

The current goes from the ignition lock to the charge indicator light, to connection D+ on the voltage regulator, via the breaker contact to connection DF on the alternator, to the carbon brushes and the exciter coil, whereupon the circuit is grounded.

In this way the rotor is excited, an a magnetic field initiated. When the rotor begins to rotate, an alternating current is formed in the stator windings, which when passing the rectifier diodes is rectified and led to the battery via connection B+.

The voltage received from the stator windings is also passing via the exciter rectifiers to the voltage regulator, and affects the coil in the voltage regulator that guides the breaker.

When the voltage reaches 14 V or more, the magnetic field of the coil becomes so strong that the current passing the breaker is cut off.

The curent to the exciter coil in then decreased, this reducees force of the magnetic field which — in turn — reduces the alternating current created by the stator windings.

Thus, the voltage regulator limits the voltage to maximum approx. 14 V.

The charge indicator light is also affected by the voltage from the stator windings via connection D+ on the regulator so, that the difference in voltage on either side of the charge indicator light is equalized and the light goes out. Thus, you can make sure that the alternator charges.

A current-limiting relay is not required, since the alternator itself limits the current intensity. At high rpm on the alternator, when the periodicity of the created, alternative voltage is high and when the intensity of the current consumed has reached a certain height, the resulting resistance (impedance) is so geat that a futher current increase is not possible.

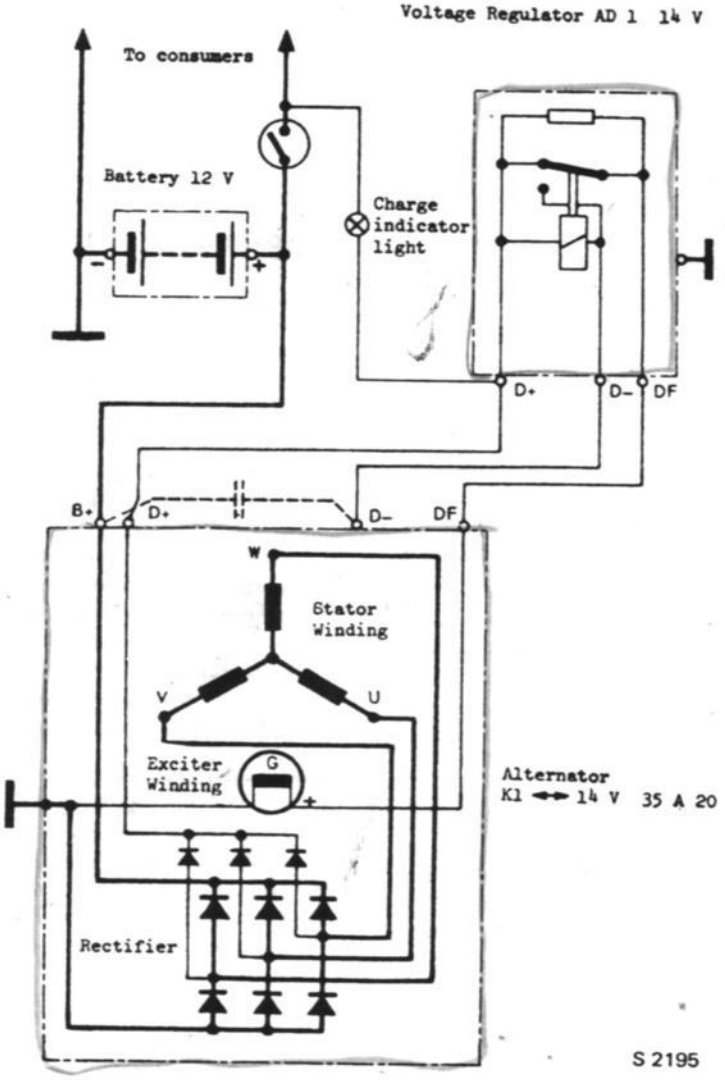

WIRING DIAGRAM FOR A. C. ALTERNATOR

Quick checking of alternator and charging regulator

If the charge indicator light does not go out, the first thing to do is to check that the alternator belt is not slipping and/or that the cable connections have not loosened. If the lamp still glows after checking in this way, the cause can be determined in the following manner:
Remove the connector from the charging regulator.
Connect a cable between the red cable's terminal D+ and the yellow cable's terminal DF.

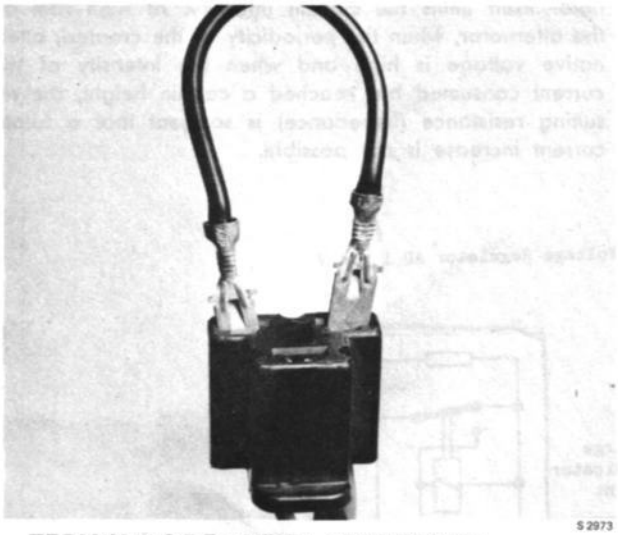

TERMINALS DF AND D+ CONNECTED

Start the engine and let it run at max. 2000 rpm while watching the charge indicator light.

> WARNING
> Do not run the engine at a higher speed than 2000 rpm, as there is a risk of damage to the power consumers being caused by overvoltage.

If the indicator light goes out immediately, the charging regulator is defective and must be renewed.
If the indicator light flashes or lights continuously, the alternator must be overhauled.

Removal and installation of alternator

1. Disconnect the battery negative cable.
   NOTE! The engine must be stopped before detachment of cable.
2. Disconnect the alternator cables, retaining and adjusting bolts and take off the fan belt.
3. Lift out the alternator.
4. Refit the alternator in the reverse sequence.
5. Adjust the fan-belt tension so that the belt can be pressed down approx. 0.3 in. (approx. 7 mm) at a load of 3.5 lb. (1.5 kp) half way between the pulleys. See fig.

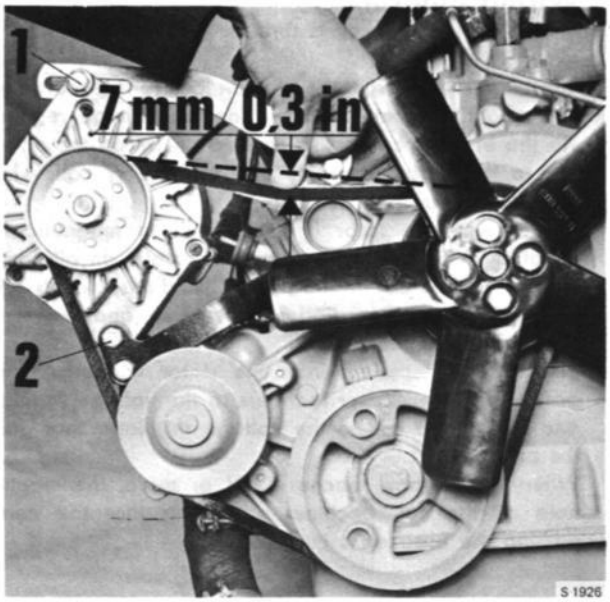

ADJUSTMENT OF FAN BELT TENSION

1. Adjusting screw
2. Retaining screw

Disassembly of alternator for renewal of bearing

1. Hold the belt pulley with a suitable tool, and loosen the nut with a 0.87 in. (22 mm) open end wrench. Loosen the belt pulley and the fan.
2. On the drive end plate, mark out the location of the attachment ear.
   Loosen the fixing screws of the drive end plate, and take out of the stator the rotor together with the drive end plate.
3. Place the drive end plate on a suitable support, and press out the rotor — gently. Now it is possible to remove the bearing. Take care not to allow the rotor — when same comes loose from the drive end plate — to fall down and be damaged.
4. Remove the ball bearing at the slip-ring end, by means of a suitable puller.

Reassembly of alternator

1. Fill the ball bearing with Bosch grease Ft 1 v 33. Press the ball bearing into the drive end plate, the enclosed side facing the drive side.
2. Ease the drive end plate onto the rotor.
3. By pressing, fasten the ball bearing to the slip-ring end. See fig. Make the enclosed side face the slip rings.

PRESSING IN THE SLIP-RING END BEARINGS

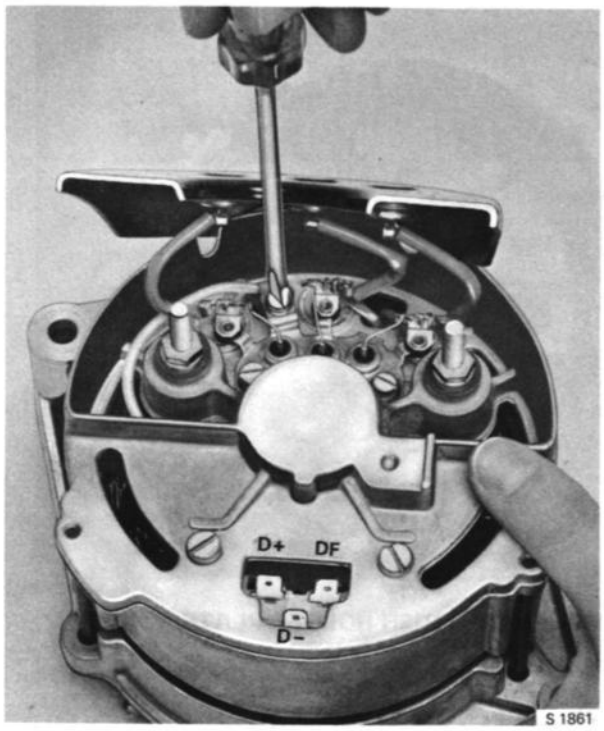

REMOVAL OF BRUSH HOLDER PLATE CONNECTION CABLE

4. Put the rotor in, and assemble the alternator by screwing. When doing this, make sure that the drive end plate gets correctly positioned as regards the slip-ring end plate, and that the carbon brushes not be damaged. Screw on the belt pulley, torque 25—29 ft.-lb. (3.5—4.0 kpm).

Renewal of carbon brushes

1. On the drive end plate, mark out the location of the attachment ear.
   Loosen the fixing screws of the drive end plate, and take out of the stator the rotor together wit the drive end plate.
2. Loosen the two nuts retaining the heat sink plate.

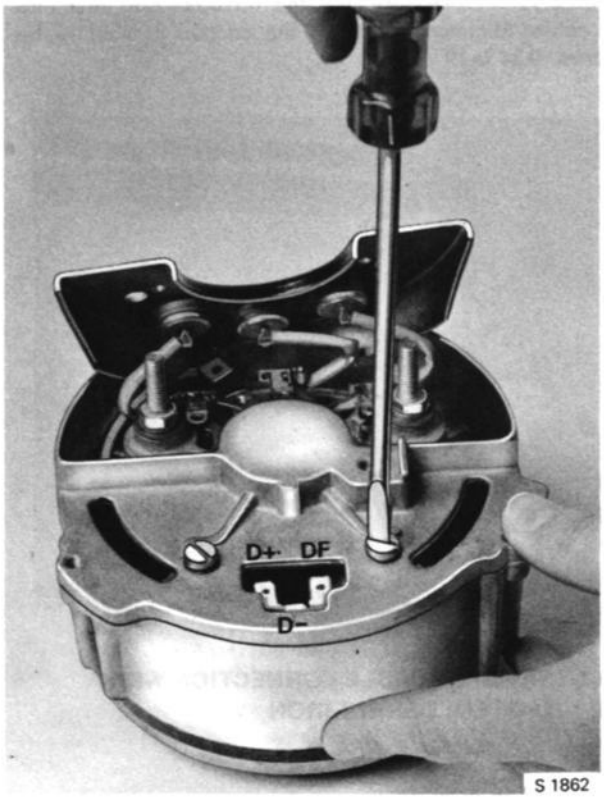

LOOSENING THE BRUSH HOLDER PLATE FIXING SCREWS

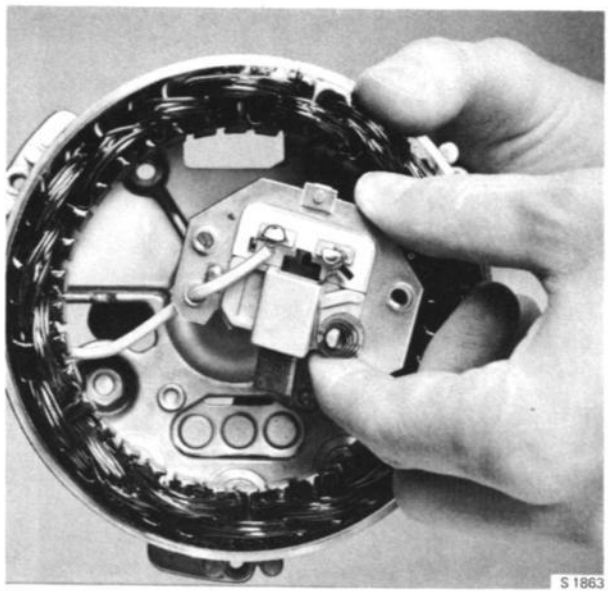

REMOVAL OF BRUSH HOLDER PLATE

3. Loosen the screw for brush holder plate connection cable, see fig.
4. Loosen the brush holder plate fixing screws. Remove plate.
5. Loosen the cable connections, with a soldering iron and remove the carbon brushes.

When soldering the carbon-brush connections on, it is necessary to make sure that the tin does not flow into the cable. Minimum length of the carbon brushes to be approx. 0.34 in.(9 mm).

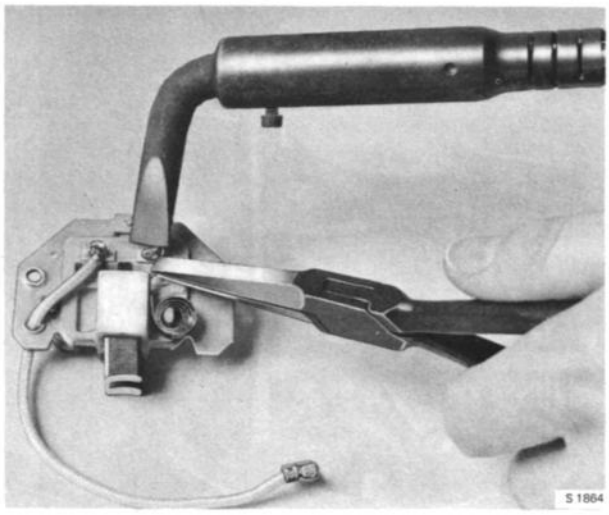

LOOSENING THE CABLE CONNECTION WITH THE AID OF SOLDERING IRON

Installation is made in the reverse order. When fitting the rotor, be careful not to damage the carbon brushes.

Testing

Please note the following points before testing the alternator or parts thereof:

Diodes may only be tested with D.C. voltages not exceeding 24 V.

Glim glowing lamps (110 V or 220 V) may not be used for insulation or short circuit tests, as they may damage the diodes.

The 80 V 40 W test voltage for the stator winding insulation test may only be applied if the diodes are disconnected.

While the engine is running, battery terminals may not be disconnected to check the charging current on the vehicle.

Semi-conductors are extremely sensitive to heat. To prevent excessive heat when soldering, use a pair of flat pliers to hold the supply wire near the diode. (Use a hot iron and be as quick as possible.) Any mechanical damage to the diode connecting wires must be avoided, e.g. do not bend or load the wire directly on the diode.

The battery must be switched off or disconnected before any repair work commences on the alternator, either while in the vehicle or on the test bench.

Only instruments having not more than 8 V voltage may be used for measuring resistances on the accembled alternator.

TESTING ALTERNATOR ON BENCH

On the test bench, the alternator must be driven with its own pulley only. All connections must be made with correct size cable shoes, or with spade terminals. Do not improvise the battery connection.

A 12 V battery must be connected parallel to the alternator when testing. The battery will act as a buffer and smooth off any peak voltages arising from switching on or off the load.

Peak voltages exceeding the maximum permissible value will damage the rectification effect of diodes. The maximum permissible peak voltage on silicon diodes is approx. 50 V.

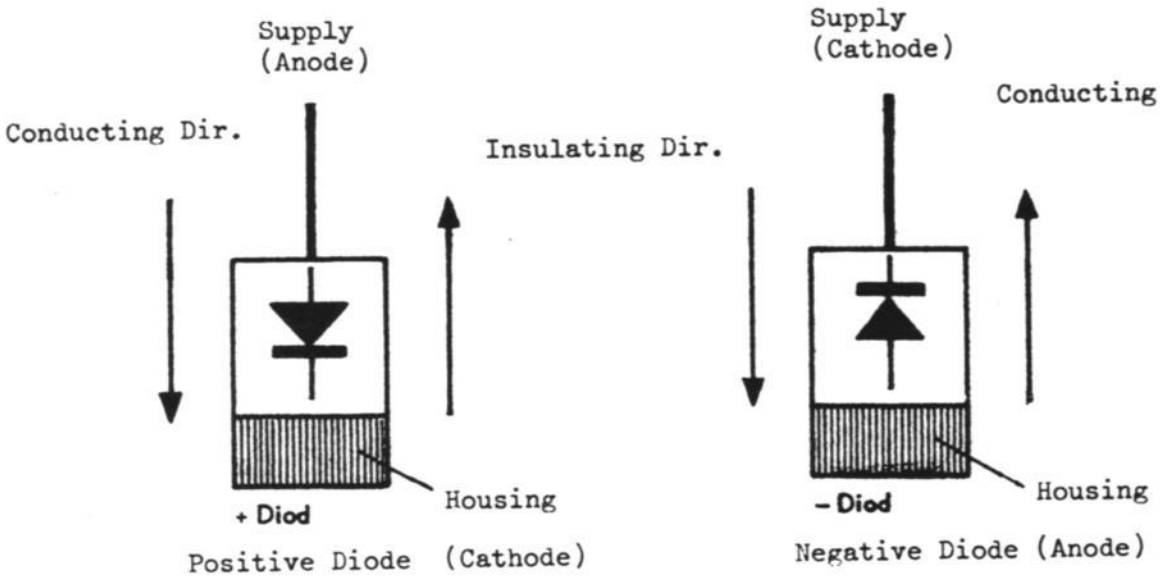

EXCITATION

Contrary to D.C. generators, alternators lose their selfexciting properties after long storage. Therefore a charge indicator light of 12 V and minimum 1,2—2,0 W must be connected between terminals D+ and B+ according to wiring diagram. The pre-exciting current will then flow through the charge indicator light, D+ on the alternator, D+ on the regulator, the closed regulator contacts and DF to the exciter coil fitted to the rotor. It is most important that the charge indicator light bulb is minimum 1,2—2,0 W. Self-exciting commences as soon as the alternator voltage opens the exciter diodes, which occurs at about 1 to 2 volts. From there on, the voltage increases rapidly, the voltage difference on the charge indicator light bulb decreases, and the bulb will go out as soon as battery voltage is achieved.

MOUNTING OF THE ALTERNATOR

The alternator can be tested in most types of alternator test benches. In some cases it may be necessary to add special mounting- and driving devices.

> **CAUTION**
>
> When testing the alternator, it must be mounted in its normal attachment and not e.g. fastened by squeezing.

TESTING WITH REGULATOR

Mount the alternator to the test bench and connect it to the voltage regulator.

Do not mix up connections!

Connect the exciter current ammeter to terminal DF on alternator. Switch on battery; switch on charge indicator ligth. Connect voltmeter to terminal B+. To pre-excite the alternator, increase the speed from zero until the ourput voltage is approx. 14 V, then decrease speed again.

TESTING 2/3 OF MAXIMUM OUTPUT CURRENT

Switch on battery and load the alternator. Adjust the speed to exactly 2000 rpm. The alternator output must now be 2/3 of maximum current = 24 A.

TESTING THE RPM AT MAXIMUM OUTPUT

Leave the battery switched on. Increase the load on alternator and let it warm up. Increase speed. Max. output (35 A at 14 V) must be achieved at 2700—3700 rpm.

TESTING OF DIODES

Use only a test lamp not exceeding 24 V or an Ohmmeter.

Always disconnect the silicon diodes from the stator windings before individual testing of the conducting- and insulating directions commences, a faulty diode could otherwise not be detected. The positive diodes connected between B+ and phase are conducting from supply wire to the housing and insulate in the reverse direction. The negative diodes between phase and B— (reversed polarity) are conducting from housing to supply and insulate from supply to housing. See fig.

Connect the test lamp in series to the diode to be tested. On diodes of normal polarity, the test lamp will light up if B+ is connected to the anode. The lamp must not light up if B+ is applied to the housing (cathode).

On diodes of reversed polarity, the bulb must light up if B+ is connected to the supply (cathode) but not if the direction of current is reversed.

Faults of diodes can be open circuit in the conducting direction due to excessive current and, as a consequense, too much heat. Conducting in both directions is in most cases due to excessive voltages during operation.

TESTING OF DIODES WITH OHM-METER

The diodes can also be tested with an Ohm-meter. The resistance of a good diode is small in the conducting direction (e.g. a few Ohms), whereas the resistance in the insulating direction is considerably higher (e.g. a few kilo Ohms).

TESTING OF STATOR WINDINGS

Short Circuit to Ground (diodes unsoldered).

Short circuit to ground of stator winding can be tested as usual with a test lamp of max. 40 V.

Also with diodes connected, short circuit to ground can be tested if their insulating direction is considered. The positive terminal of the tester must tbe applied to the

stator winding and the negative to the diode housing. Note the test voltage: not more than 24 V.

SHORT CIRCUIT OF STATOR WINDINGS (DIODES UNSOLDERED)

This short circuit can be established with a winding tester, but is only possible with the alternator dismantled.

A further possibility is to measure simultaneously the resistance for two phases. By three measurements you can find out the stator windings resistance deviations. If the phases are marked U, V and W, the measurements shall be made between U—V, U—W and V—W. The value of each measurement shall be 0.20–0.22 Ohms (at 68°F = +20°C).

TESTING THE EXCITER WINDING (ROTOR)

SHORT CIRCUIT IN THE WINDING

With an Ohm-meter, check the exciter winding resistance from slip ring to slip ring.

The resistance value must be 4.0–4.4 Ohms.

SHORT CIRCUIT TO GROUND

The exciter windings and the insulation of slip rings is tested with regard to short circuit to ground (test voltage 40 V).

REMOVAL AND INSTALLATION OF STARTER

Removal

1. Disconnect negative cable from battery.
2. Disconnect supply cable from the solenoid switch.
3. Disconnect positive cable from starter.
4. Unscrew the two retaining screws and remove starter.

Installation

> IMPORTANT
> Before installing starter, check for wear on ring gear and starter pinion. Clean all mating surfaces.

1. Secure starter with the two retaining screws.
2. Connect cables to starter.
3. Connect negative battery cable.

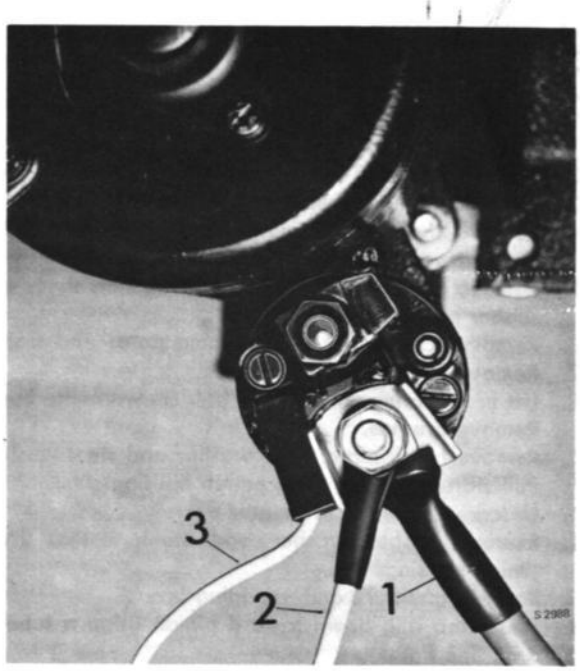

CABLE CONNECTIONS AND CABLE COLOURS, STARTER

1. Red from battery
2. 85 grey
3. 84 yellow

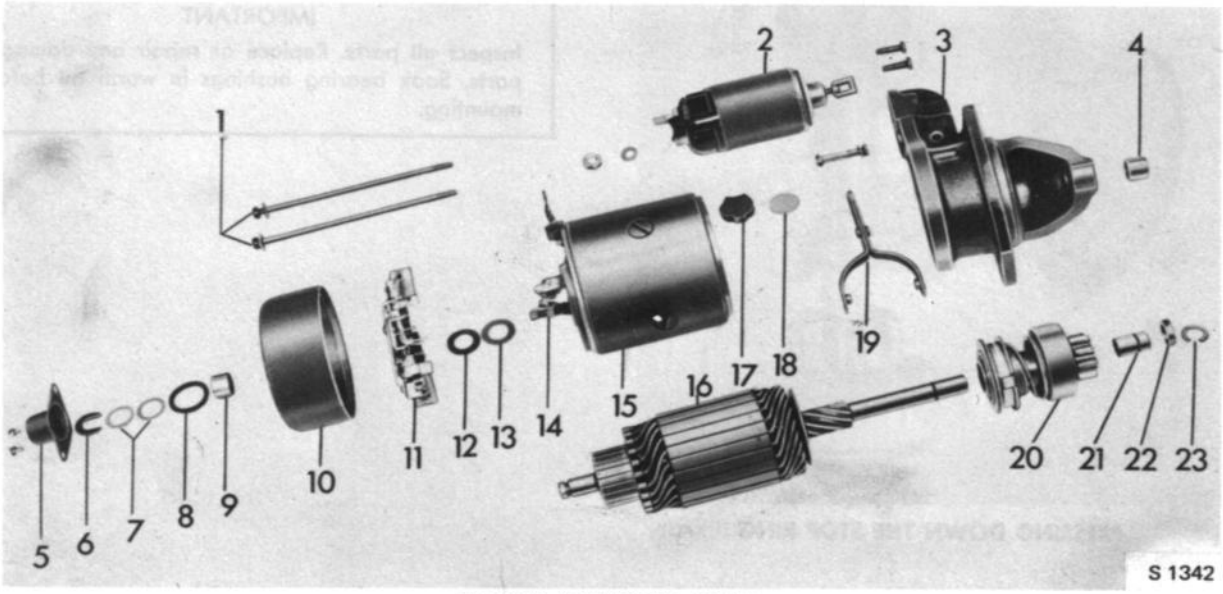

STARTER, EXPLODED VIEW

1. Screws, commutator end frame.
2. Solenoid switch.
3. Pinion housing.
4. Bearing bushing, drive side.
5. Protective cap.
6. U-shaped washer.
7. Shims.
8. Rubber gasket.
9. Bearing bushing, commutator side.
10. Commutator end frame.
11. Brush plate assembly.
12. Fiber washer.
13. Steel washer.
14. Field winding.
15. Starter housing.
16. Armature.
17. Rubber washer.
18. Steel washer.
19. Engaging lever.
20. Starter pinion.
21. Bearing, bushing, starter pinion.
22. Stop ring.
23. Retaining ring.

DISASSEMBLY OF STARTER

Disassembly

1. Disconnect supply cable from solenoid switch.
2. Remove retaining screws that secure solenoid switch.
3. Unhook solenoid switch and remove it.
4. Remove the two retaining screws that secure the protective cap.
5. Remove protective cap, U-shaped washer, shims and rubber gasket.
6. Remove screws that secure commutator end frame.
7. Remove commutator end frame.
8. Lift brush springs away from holders with wire hook. Remove brushes.
9. Remove brush plate, fiber washer and steel washer.
10. Pull starter housing from pinion housing.
11. Unscrew engaging lever guide screw.
12. Remove rubber washer and steel washer from pinion housing.
13. Remove armature and engaging lever.
14. Press stop ring down toward pinion using a tubular drift. See fig.

S 1338

PRESSING DOWN THE STOP RING

15. Remove retaining ring with a pair of retaining ring pliers. See fig.

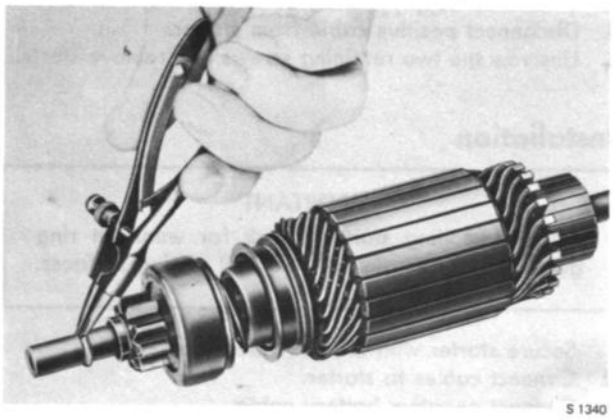

S 1340

REMOVAL OF LOCKING RING

16. Check whether there are any scores on the rapid-advance threads on the armature shaft which engage the pinion. If so, remove by filing.
17. Check the ring gear and starter pinion.

> IMPORTANT
>
> Inspect all parts. Replace or repair any damaged parts. Soak bearing bushings in warm oil before mounting.

Assembly

1. Lubricate steep pitch threads on armature shaft and stop ring with silicone grease.
2. Fit starter pinion, stop ring and retaining ring onto armature shaft.
3. Use stop ring pliers to press retaining ring into groove in armature shaft.
4. Bring stop ring into position using a press or a puller. See fig.

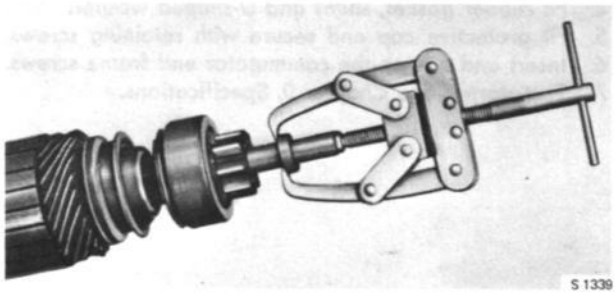

PRESSING UP THE STOP RING

5. Insert engaging lever in stop ring and then insert together with armature, in pinion housing.
6. Secure engaging lever with guide screw.
7. First insert steel washer and then rubber washer with its lug turned toward armature in pinion housing.
8. Fit starter housing and position it with rubber washer.
9. Fit steel washer and fiber washer onto armature shaft.
10. Fit brush plate. Lift brush springs with a wire hook and insert brushes.
11. Fit commutator end frame and position it with rubber insulator.
12. Fit rubber gasket, shims and U-shaped washer.
13. Fit protective cap and secure it with its two retaining screws.
14. Insert and tighten commutator end frame screws.
15. Check axial play of armature shaft 0.0019–0.12 in. (0.05–0.3 mm) and, if necessary correct with shims.
16. Hook solenoid switch onto engaging lever and secure with the two retaining screws.
17. Connect supply cable.
18. Test starter with regard to specifications. See Chapter 0, specifications.

REMOVAL AND INSTALLATION OF SOLENOID SWITCH (starter removed)

Removal

1. Disconnect supply cable.
2. Remove the two retaining screws and then the solenoid switch.

Installation

1. Hook solenoid switch in engaging lever and secure with the two retaining screws.
2. Connect supply cable.
3. Test starter. See Chapter 0, Specifications.

CHANGING THE CARBON BRUSHES
(starter removed)

Removal

1. Remove the two retaining screws that secure the protective cap.
2. Remove protective cap, U-shaped washer, shims and rubber gasket.
3. Remove screws that secure commutator end frame.
4. Remove commutator end frame.
5. Lift brush springs from holders with wire hook and remove brushes.
6. Remove brush holder plate.
7. Disconnect brush leads from brush holder plate and field winding using soldering iron.

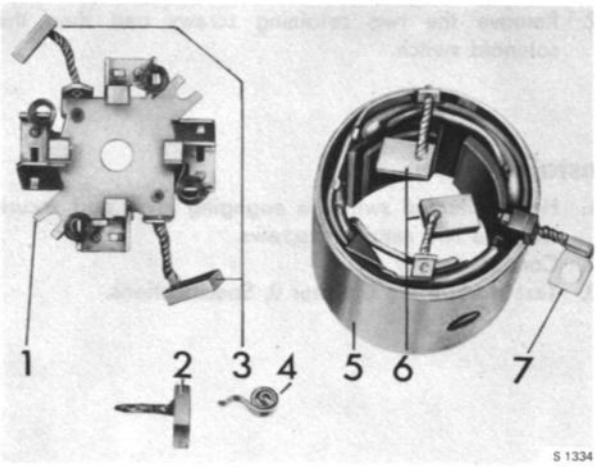

BRUSH HOLDER PLATE AND FIELD WINDING

1. Brush holder plate.
2. Brush.
3. Brush, negative.
4. Brush spring.
5. Starter housing.
6. Brush, positive with field winding.
7. Field winding lead.

Installation

1. Connect new brushes to brush holder plate and field winding using soldering iron.
2. Fit brush holder plate. Lift brush springs with wire hook and insert brushes.
3. Fit commutator end frame and position with rubber insulator.
4. Fit rubber gasket, shims and U-shaped washer.
5. Fit protective cap and secure with retaining screws.
6. Insert and tighten the commutator end frame screws.
7. Test starter. See Chapter 0, Specifications.

REPLACEMENT OF STARTER PINION
(starter removed)

Disassembly

1. Disconnect supply cable from solenoid switch.
2. Remove solenoid switch retaining screws.
3. Unhook solenoid switch and remove it.
4. Unscrew engaging lever guide screw.
5. Remove commutator end plate screws.
6. Remove pinion housing. Collect rubber and steel washers.
7. Press down stop ring toward pinion.
8. Remove retaining ring with a pair of retaining ring pliers.
9. Remove stop ring and pinion.
10. Check whether there are any scores on the steep pitch threads on the armature shaft which engage the pinion. If so, remove by filing.

Assembly

1. Lubricate steep pitch threads on armature shaft and stop ring with silicone grease.
2. Fit pinion, stop ring and retaining ring on armature shaft.
3. Use pliers to press retaining ring into groove in armature shaft.
4. Bring stop ring into place with a puller.
5. Insert engaging lever in stop ring and fit pinion housing.
6. Secure engaging lever with guide screw.
7. First insert steel washer and then rubber washer with lug turned toward armature in pinion housing.
8. Position drive- end bearing with rubber washer in starter housing.
9. Insert and tighten commutator end frame screws.
10. Hook solenoid switch in engaging lever and secure with the two retaining screws.
11. Connect supply cable.
12. Test starter.

REMOVAL AND INSTALLATION OF IGNITION COIL

Removal

1. Disconnect leads from coil.
2. Back off retaining screws and remove coil.

Installation

1. Secure coil with the two retaining screws.
2. Connect leads.

IGNITION COIL TEST

1. Disconnect leads.
2. Connect test equipment and proceed as follows:
   a) Measure resistance of primary winding between terminals 1 and 15.
   b) Measure coil performance in volts or millimeters of spark length. See Chapter 0, Specifications.

   NOTE! Check that distributor gap and dwell angle are correct.

> NOTE!
>
> Faults often become evident only after the coil has heated up. If in doubt, connect coil to test stand load half an hour prior to testing — after which it shall function perfectly.

DISTRIBUTOR

General

The distributor, type Bosch JFUR 4, is mounted at the rear of the engine block.

The distributor rotates clockwise and is driven by the camshaft via an angle drive. The firing order is 1-3-4-2. The distributor is equipped with a centrifugal governor in combination with a vacuum governor. The centrifugal governor regulates the ignition setting relative to the engine speed. The vacuum governor regulates the ignition setting relative to the load.

See instructions in Chapter 1, Maintenance, for information about distributor lubrication.

The following distributors exist:

Bosch designation	Chassis No. up to and includ.	Remarks
0 231 146 044 0 231 146 024	95/46.137 96/434.173	Semi-enclosed crankcase ventilation
0 231 146 033	as from 95/46.138 96/434.174	Fully enclosed crankcase ventilation
0 231 146 072	as from 95/47.504 96/444.942	Fully enclosed crankcase ventilation
0 231 146 073	as from 95/49.093, 96/453.130	Fully enclosed crankcase ventilation
0 231 146 084	as from 95/65.001, 96/520.001	Fully enclosed crankcase ventilation

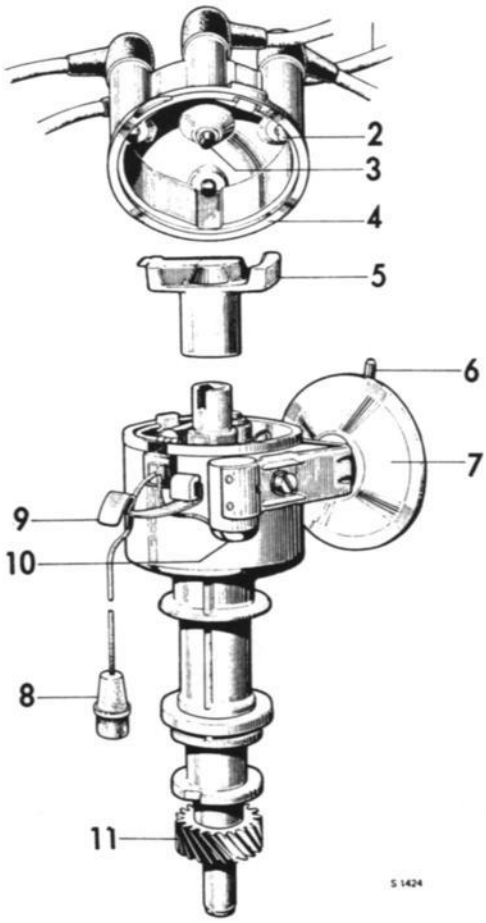

DISTRIBUTOR

1. Ignition cable
2. Contact
3. Center carbon
4. Distributor cap
5. Rotor
6. Vacuum hose connection
7. Vacuum chamber
8. Primary cable
9. Retaining spring
10. Capacitor
11. Gear

REMOVAL AND INSTALLATION OF DISTRIBUTOR

Removal

1. Remove ignition cables from spark plugs.
2. Release retaining springs and remove cap.
3. Remove primary cable.
4. Remove vacuum hose.
5. Crank engine until the mark on the rotor and the mark (line) on the distributor housing are directly opposite each other. This is the firing position for cylinder 1 (6° before T.D.C.)
6. Unscrew retaining clamp screw and remove clamp.

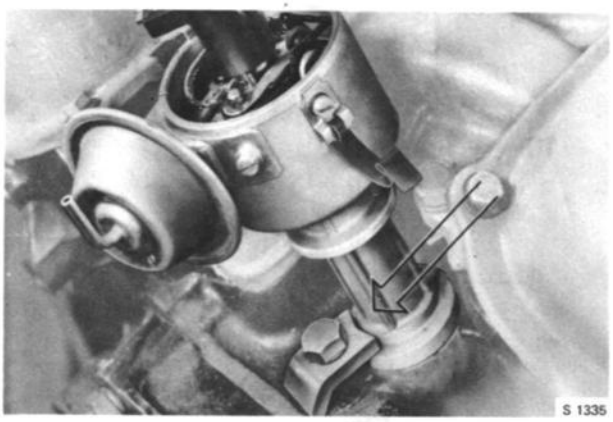

REMOVING DISTRIBUTOR.

7. Remove distributor from engine.

Installation

1. Turn distributor shaft until rotor is directly opposite assembly mark (point). See fig.
2. Insert distributor in engine.
3. See that gears mesh properly. Rotate the crankshaft clockwise until the distributor shaft engages the oil-pump drive shaft properly.

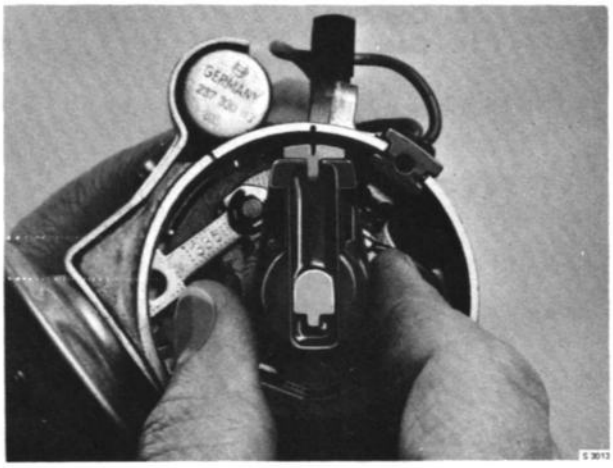

INSTALLATION MARK

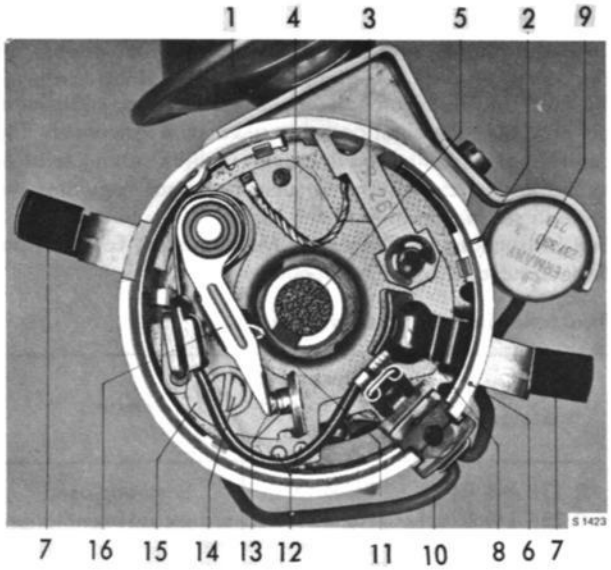

DISTRIBUTOR

1. Vacuum chamber.
2. Adjustment mark.
3. Adjustment rod.
4. Ground lead.
5. Lubricating felt.
6. Assembly mark.
7. Retaining spring.
8. Bearing.
9. Capacitor.
10. Primary cable
11. Fiber peg.
12. Adjuster for fixed breaker point.
13. Breaker points.
14. Locking screw.
15. Fixed breaker point.
16. Movable breaker point.

4. Check that the mark on the pulley coincides with the 6° mark on the transmission cover (firing position for cylinder 1).
5. Turn distributor housing so that the mark on the rotor is directly opposite the mark (line) on the edge of the distributor housing. See fig.
6. Adjust ignition setting.
7. Tighten retaining clamp slightly with the screw so that the distributor can still be turned.
8. Connect primary cable.
9. Connect dwell angle tester and close ignition circuit. Check and adjust dwell angle at starter rpm.
10. Fit cap (correct position is indicated by rear retaining spring). Secure it with retaining springs and connect ignition cables.
11. Connect a stroboscope. Check and adjust ignition setting at starter rpm. or start engine and let it run

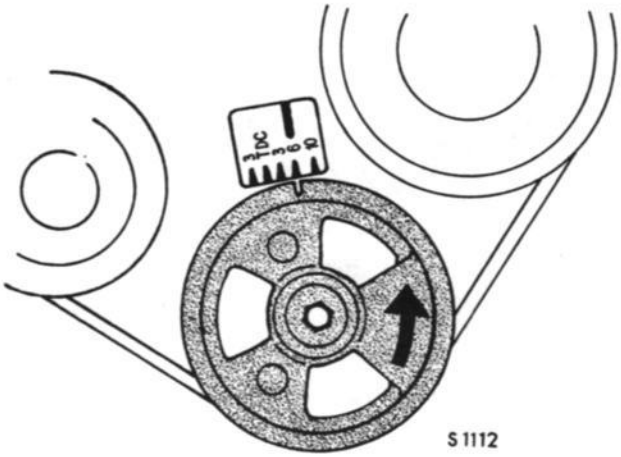

MARKS FOR IGNITION SETTING

at 500 rpm. At higher engine speeds the centrifugal governor commences to operate and invalidates the setting.

12. Tighten the distributor clamp.
13. Adjust the idling rpm.

OVERHOUL OF DISTRIBUTOR (distributor removed)

Disassembly up to and incl. chassis No. 453129/96, 49092/95

1. Remove the rotor.
2. Remove the breaker arm connection.
3. Remove the capacitor retaining screw and remove the capacitor together with the connection.
4. Remove the lock ring from the pivot of the vacuum chamber control rod.
5. Remove the two screws from the vacuum chamber and remove same.
6. Remove the two cap retaining spring screws.
7. Lift up the breaker plate.
8. Drive with the aid of a 0.16 in. (4 mm) mandrel out the tension pin from the gear.
9. Remove the gear with the aid of a suitable puller, see fig.

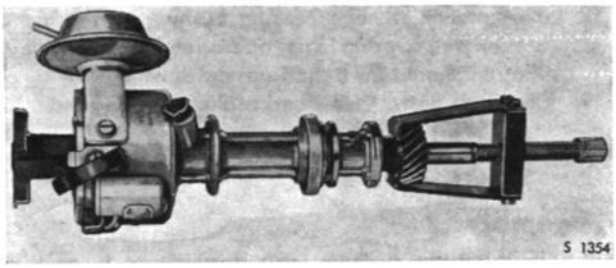

REMOVAL OF DISTRIBUTOR GEAR

10. Lift up the entire distributor shaft.
11. Remove the two coil springs from the governor.
11. With the aid of two screwdrivers, press away the cam from the centrifugal governor weights.
13. Remove the lubricating felt, the lock ring and wearing washer from the breaker cam.
14. Remove the lock ring and the washers from the breaker arm pivots. Valid for distributor 0 231 146 044 and 0 231 146 024.

15. Press leaf spring out of hole in contact support and remove breaker arm. Collect any shims (applies to distributors 0 231 146 044 and 0 231 146 024).
16. Remove retaining screw that secures fixed breaker point.
17. Remove the breaker point (breaker unit distributor 0 231 146 033).
18. If necessary, remove bearing bushing by the aid of a mandrel. During this operation, the distributor housing should be turned upside down.
19. Check all parts. Clean and replace as required.

Assembly

1. Soak bearing bushing in warm oil prior to munting. Then use mandrel 786215 to press it into same plane as edge of distributor housing.
2. Smear distributor shaft with oil, fit breaker cam and hook the two coil springs in place.
3. Insert wear washer and retaining ring in breaker cam. Press retaining ring into place using a tubular drift; inside diameter 0.25 in. (6 mm), outside diameter 0.32 in. (8 mm), length approx. 2 in. (50 mm).
4. Insert lubricating felt and soak with oil.
5. Fit distributor shaft in distributor housing after smearing it with oil.

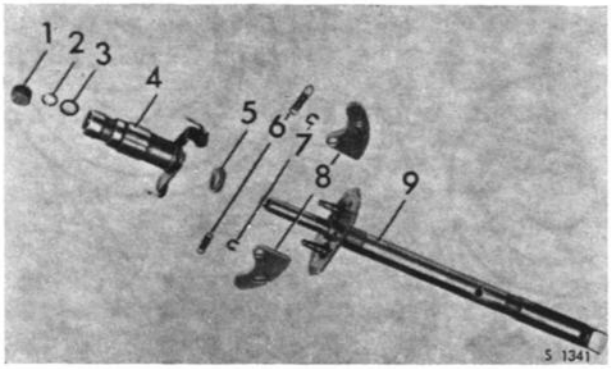

IGNITION GOVERNOR

1. Lubricating felt.
2. Retaining ring.
3. Wear washer.
4. Breaker cam.
5. Spacer ring.
6. Coil spring.
7. Retaining ring.
8. Governor weights.
9. Distributor shaft.

6. Press on drive gear using a tubular drift about 0.5 in. 12 mm) in diameter and 2.4 in. (60 mm) long. Press far enough to align holes for the slotted pin.
7. Hammer in slotted pin, seeing to it that distributor shaft is properly supported.
8. Fit breaker plate in distributor housing (turn spring with ball toward. Primary terminal.)
9. Screw on retaining spring with lug (that determines cap position) on primary-terminal side.
10. Screw on retaining spring on other side.
11. Fit the fixed breaker point or breaker unit and insert retaining screw without tightening it firmly.
12. Lubricate pivot and bearing bushing on breaker arm with Bosch Ft 1 v 22 grease.
13. Insert breaker arm leaf spring in hole in contact support (applies to distributors 0 231 146 044 and 0 231 146 024). The faces of the points must be parallel to each other. Correct any misalignment with shims or by aligning the fixed breaker point.
14. Fit shims and clip on the pivot (applies to distributors 0 231 146 044 and 0 231 146 024).
15. Smear the breaker cam and fiber peg with Bosch Ft 1 v 4 grease.
16. Turn distributor shaft until breaker arm is lifted all the way from the fixed breaker point. Insert a screwdriver between the two adjusting lugs and slot. Turn screwdriver to set gap. Tighten retaining screw and re-check gap.
17. Hook vacuum chamber adjusting rod to pivot and secure with locking ring.
18. Secure vacuum chamber with the two retaining screws.
19. Fit capacitor terminal to distributor housing and screw capacitor in place.
20. Connect breaker arm lead.
21. Fit rotor.

Disassembly/of distributor, as from chassis No. 453130 96 and 49093/95

As from chassis No. 453130/96 and 49093/95 respectively, the design of the distributors has been modified. The breaker plate is not removable. Repair kits have not been prepared.

1. Remove the rotor.
2. Remove the breaker arm connection cable.
3. Back off the capacitor retaining screw and remove the capacitor together with the connection.
4. Remove the lock ring from the pivot for the vacuum regulator control rod.
5. Back off the two retaining screws for the vacuum regulator and remove the regulator.
6. Back off the retaining screw for the fixed breaker point.
7. Remove the breaker point — point unit.
8. Using an 0.16 in (4 mm) mandrel, drive the tension pin out of the gear.
9. Remove the gear with the aid of a suitable puller. See fig.

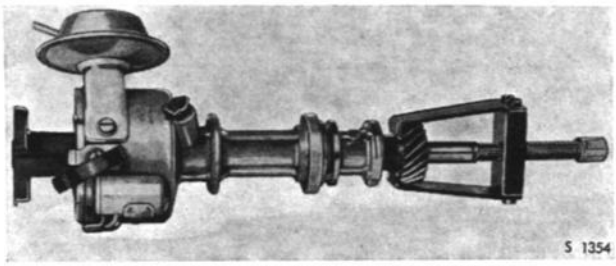

REMOVAL OF DISTRIBUTOR GEAR

Assembly

1. Press the gear on, using a tube about 0.5 in. (12 mm) in diameter and 2.4 in. (60 mm) long. Press far enough to align the holes for the tension pin.
2. Drive the tension pin in, making sure that the distributor shaft is properly supported meanwhile.
3. Fit the fixed breaker point or the breaker unit and insert the retaining screw without tightening it firmly.
4. Smear the breaker cam and fiber block with Bosch grease Ft 1 v 4.
5. Turn the distributor shaft until the breaker arm is lifted completely from the fixed breaker point. Apply a screwdriver between the two adjusting lugs and the slot. Turn the screwdriver to adjust the gap. Tighten the retaining screw and recheck the gap.
6. Hook the vacuum regulator controll rod onto the pivot and secure with the lock ring.
7. Secure the vacuum regulator with the screw.
8. Pass the capacitor terminal into the distributor housing and screw the capacitor in place.
9. Reconnect the breaker arm connection cable.
10. Refit the rotor.

CHANGING OF BREAKER POINTS (distributor removed)

Disassembly

1. Disconnect breaker arm lead.
2. Remove clip and washers from breaker pivot (applies to distributors 0 231 146 044 and 0 231 146 024).
3. Press leaf spring out of hole contact support and remove breaker arm. Collect any shims (applies to distributors 0 231 146 044 and 0 231 146 024).
4. Remove retaining screw that secures fixed breaker point.
5. Remove breaker point (breaker unit on distributor 0 231 146 033).

Assembly

> NOTE!
> Do not get any oil or grease on contact surfaces (may cause oxidation).

1. Insert the fixed breaker point or breaker unit and insert retaining screw without tightening it firmly.
2. Lubricate pivot and bearing bushing on breaker arm with Bosch Ft 1 v 22 grease.
3. Insert breaker arm leaf spring in hole in contact support (applies to distributor 0 231 146 044 and 0 231 146 024). The faces of the points must be parallel to each other. Correct any misalignment with shims or by aligning the fixed breaker point.
4. Fit shims and clip on the pivot (applies to distributors 0 231 146 and 0 231 146 024).

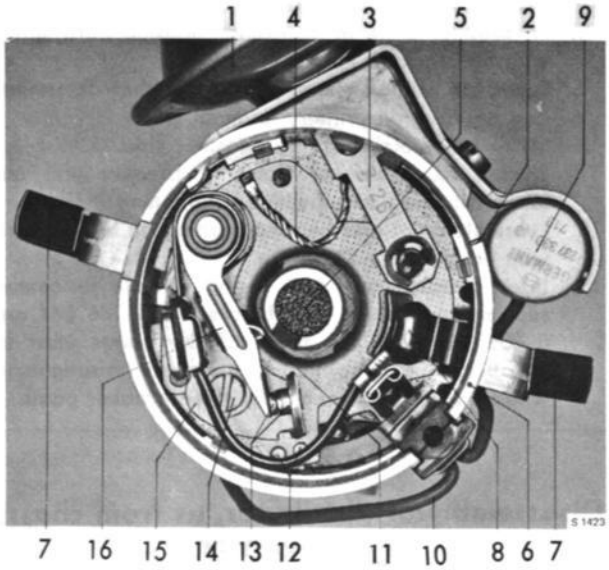

DISTRIBUTOR

10. Primary cable.
12. Adjuster for fixed breaker point.
14. Locking screw.

5. Smear the breaker cam and fiber peg with Bosch Ft 1 v 4 grease.
6. Turn distributor shaft until breaker arm is lifted all the way from the fixed breaker point. Insert a screwdriver between the two adjusting lugs and slot. Turn screwdriver to set gap. Tighten retaining screw and re-check gap.
7. Connect breaker arm lead.

CHANGING BREAKER POINTS
(distributor installed in car)

Disassembly

1. Release retaining springs and remove cap.
2. Remove rotor.
3. Disconnect breaker arm lead.
4. Remove clip and washers from breaker pivot (applies) to distributors 0 231 146 044 and 0 231 146 024).
5. Press leaf spring out of hole in contact support and remove breaker arm. Collect any shims (applies to distributors 0 231 146 044 and 0 231 146 024).
6. Remove retaining screw that secures fixed breaker point.
7. Remove breaker point (breaker unit on distributor 0 231 146 033).

Assembly

> NOTE!
> Do not get any oil or grease on contact surfaces (may cause oxidation).

1. Insert the fixed breaker point or breaker unit and insert retaining screw without tightening it firmly.
2. Lubricate pivot and bearing bushing on breaker arm with Bosch Ft 1 v 22 grease.
3. Insert breaker arm leaf spring in hole in contact support (applies to distributors 0 231 146 044 and 0 231 146 024). The faces of the points must be parallel to each other. Correct any misalignment with shims or by aligning the fixed breaker point.
4. Fit shims and clip on the pivot (applies to distributors 0 231 146 044 and 0 231 146 024).

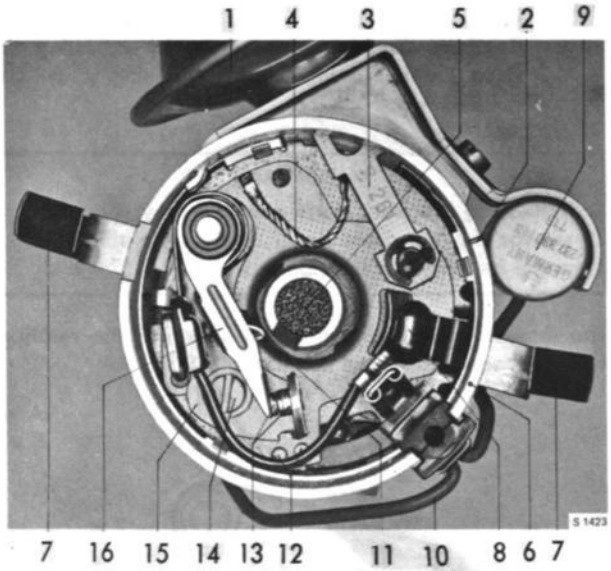

DISTRIBUTOR

10. Primary cable.
12. Adjuster for fixed breaker point.
14. Locking screw.

5. Smear the breaker cam and fiber peg with Bosch Ft 1 v 22 grease.
6. Connect breaker arm lead.
7. Adjust gap and dwell angle.
   a) Breaker point gap
   Crank engine until breaker arm is lifted all the way from the fixed breaker point. Insert a screwdriver between the two adjusting lugs and slot, turn screwdriver to set gap. Tighten retaining screw and re-check gap.

b) Dwell angle
Connect a dwell angle tester. Turn on ignition and crank engine with starter. Compare indicated value with specified value. See Chapter 0, Specifications. Correct if necessary by adjusting the fixed breaker point. Tighten retaining screw and re-check gap.

> IMPORTANT
> When the breaker points are new they should be set for the narrower dwell angle since the dwell angle increases as the points wear.

The three drawings shown below illustrate the relationship between gap A and dwell angle S.

The cross-hatched point illustrates the gap at the highest position of the cam.

8. Soak the lubricating felt in the distributor shaft with oil and fit the rotor.
9. Fit cap and secure with the two retaining springs.
10. Connect a stroboscope and check the ignition setting at starter speed or when running engine at 500 rpm. Remove vacuum hose for this check. Adjust if necessary.

A = Breaker point gap
S = Dwell angle

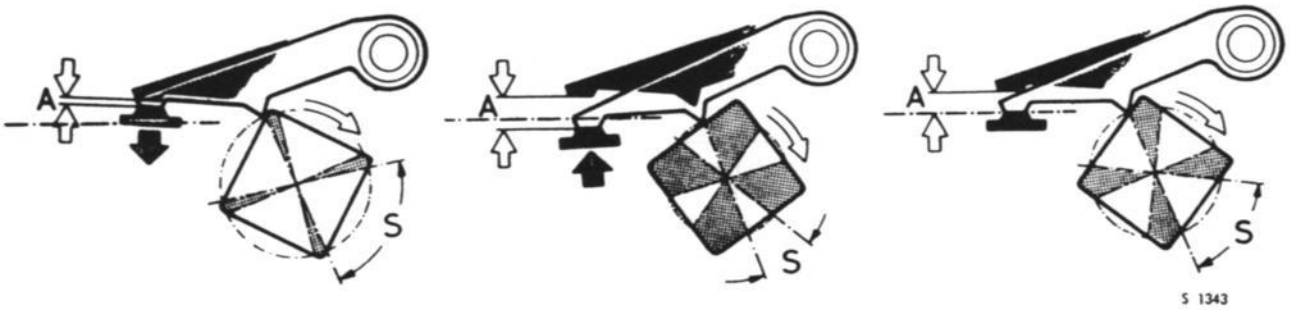

MEASURING DWELL ANGLE

Gap A too narrow Angle S too wide	Gap A too wide Angle S too narrow	Gap A correct Angle S correct

CHANGING CAPACITOR (distributor removed)

Removal

1. Disconnect breaker arm lead.
2. Remove capacitor retaining screw. Remove capacitor together with terminal.

Installation

1. Insert capacitor terminal in distributor housing and screw capacitor in place.
2. Connect up breaker arm lead.
3. Check that the distributor cap does not touch the capacitor.

CHANGING VACUUM CHAMBER (distributor removed)

Removal

1. Remove the lock ring from the pivot for the vacuum regulator control rod.
2. Back off the two vacuum regulator retaining screws (one screw as from chassis No. 453130/96 and 49093/95 respectively) and remove the regulator.

Installation

1. Hook the control rod onto the pivot and secure with the lock ring.
2. Secure the vacuum regulator with the two screws (one screw as from chassis No. 453130/96 and 49093/95 respectively).

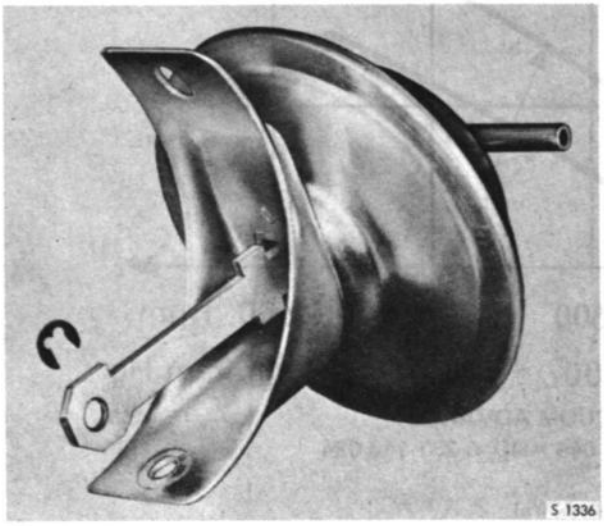

VACUUM CHAMBER

CHECKING AND ADJUSTING THE IGNITION SETTING

1. Connect dwell angle tester and tachometer.
2. Connect stroboscope.
3. Disconnect vacuum hose.
4. Turn on ignition and check dwell angle at starter rpm and with the engine idling. Adjust if required.
5. Check, and adjust if required, the ignition setting at starter rpm or with engine running at about 500 rpm.
6. If necessary, loosen retaining clamp and adjust ignition setting by turning distributor housing (to the left to advance the ignition, to the right to retard it). See Chapter 0, Specifications, for correct values. Reconnect vacuum hose. Adjust engine idling speed. Disconnect stroboscope, tachometer and dwell angle tester.

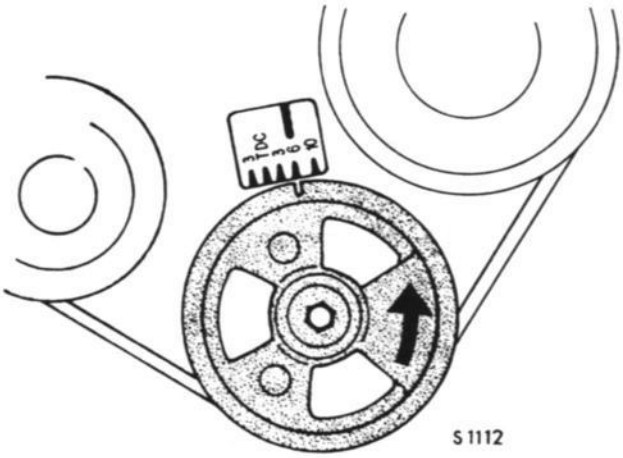

MARKS FOR IGNITION SETTING

CHANGING DISTRIBUTOR CAP

Removal

1. Remove all ignition cables with rubber protectors from cap.
2. Release retaining springs and remove cap.

Installation

1. Position cap. Note that its position is determined by the rear retaining spring. Secure cap with springs.
2. Connect up ignition cables in correct firing order.

Note! The distributor caps are of different design and suits only the determined distributor.

TESTING DISTRIBUTOR IN TEST BENCH.

Test as instructed by manufacturer of test bench. See table and ignition timing curves for correct test values.

NOTE!
1. Distributor speed is half the engine speed.
2. Camshaft angle is half the crankshaft angle.

If the distributor is to be tested while still in the engine, timing angle readings and speed readings shall be doubled when compared with those valid when testing in test bench. Moreover, engine vibrations may cause a certain amount of deviation from these values.

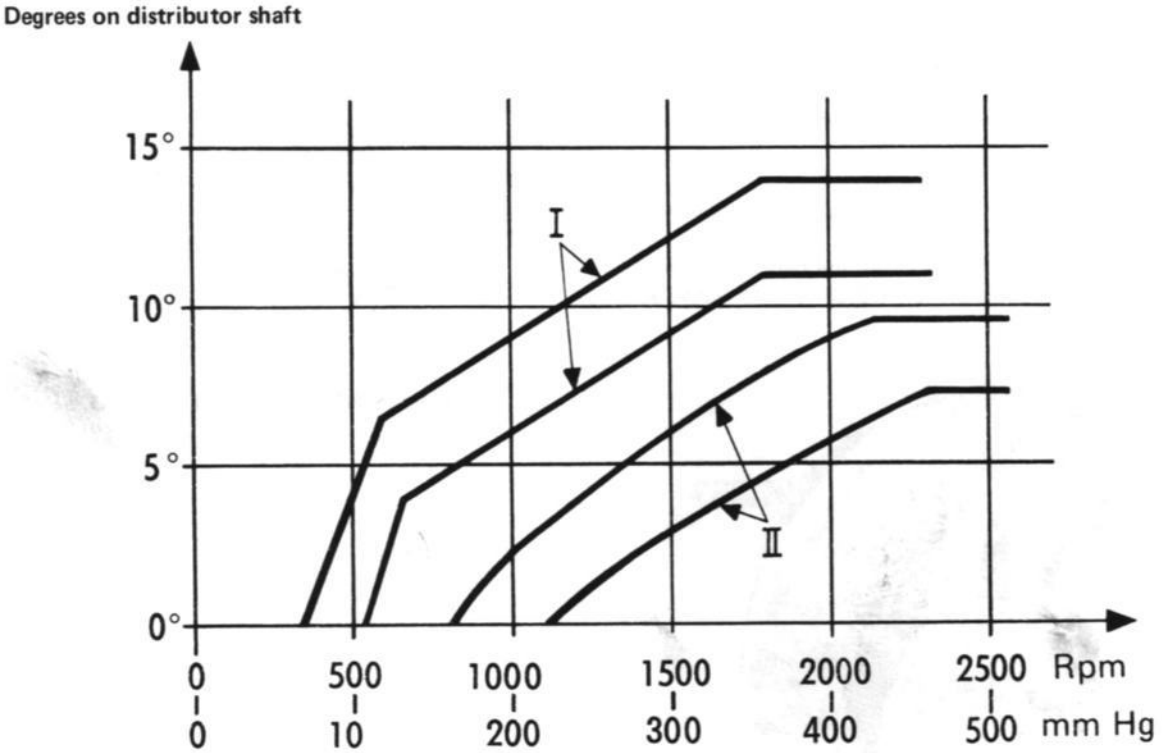

CENTRIFUGAL AND VACUUM ADVANCE
DISTRIBUTOR 0 231 146 044 AND 0 231 146 024

S 3253

Dwell angle 50 ± 2°
Contact pressure 14–19 oz. (400–530 g)

I = Centrifugal advance
II = Vacuum advance
Rpm = Distributor r.p.m.
mm Hg = Underpressure

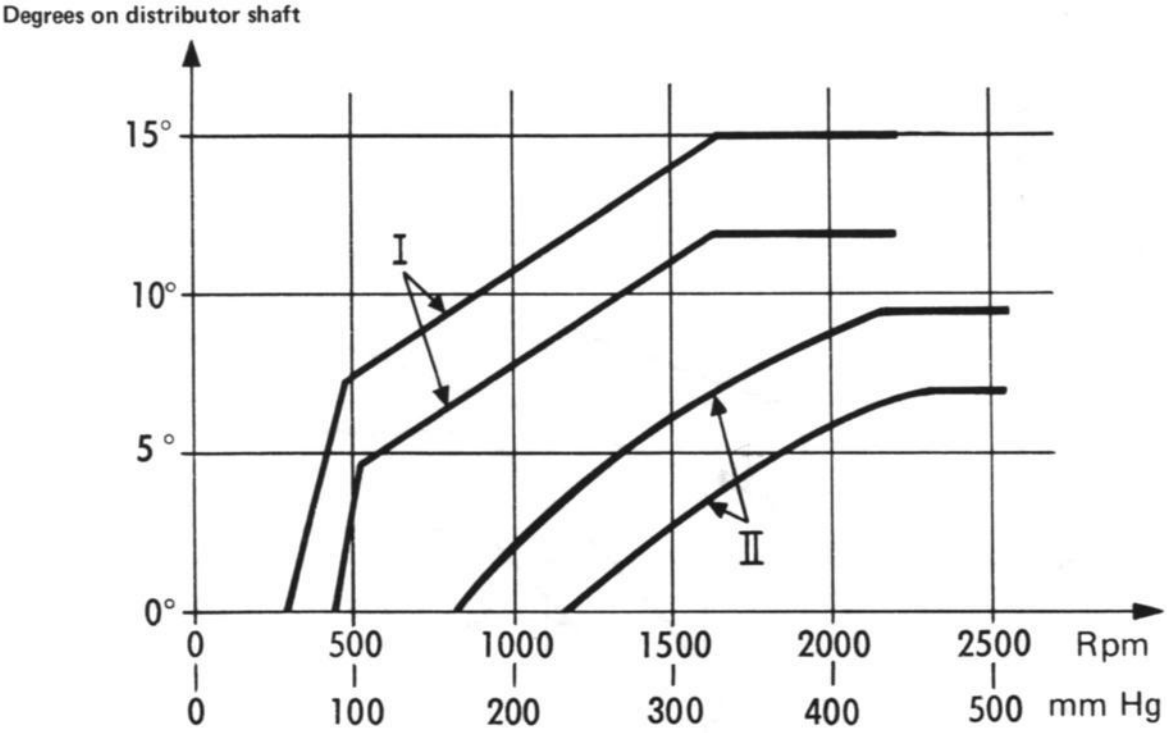

CENTRIFUGAL AND VACUUM ADVANCE
DISTRIBUTOR 0 231 146 033 AND 0 231 146 072

S 3252

Dwell angle 50 ± 2°
Contact pressure 14–19 oz. (400–530 g)

I = Centrifugal advance
II = Vacuum advance
Rpm = Distributor r.p.m.
mm Hg = Underpressure

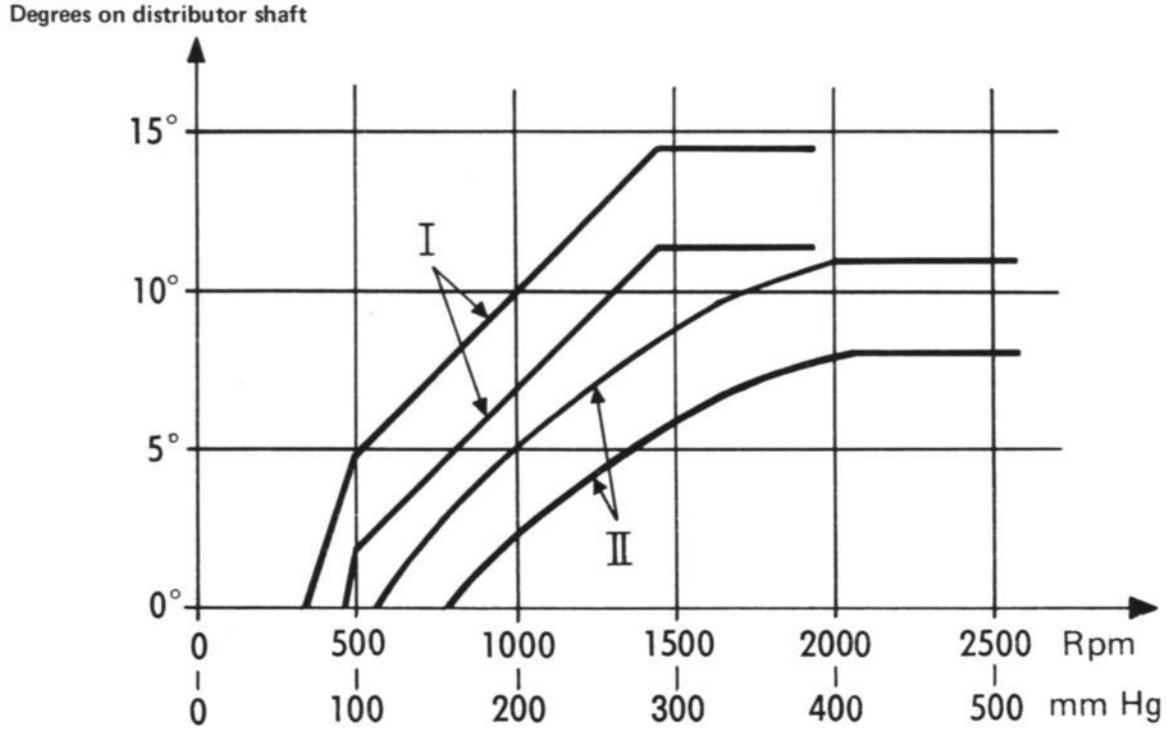

CENTRIFUGAL AND VACUUM ADVANCE
DISTRIBUTOR 0 231 146 073

S 3251

Dwell angle 50 ± 2°
Contact pressure 14–19 oz. (400–530 g)

I = Centrifugal advance
II = Vacuum advance
Rpm = Distributor r.p.m.
mm Hg = Underpressure

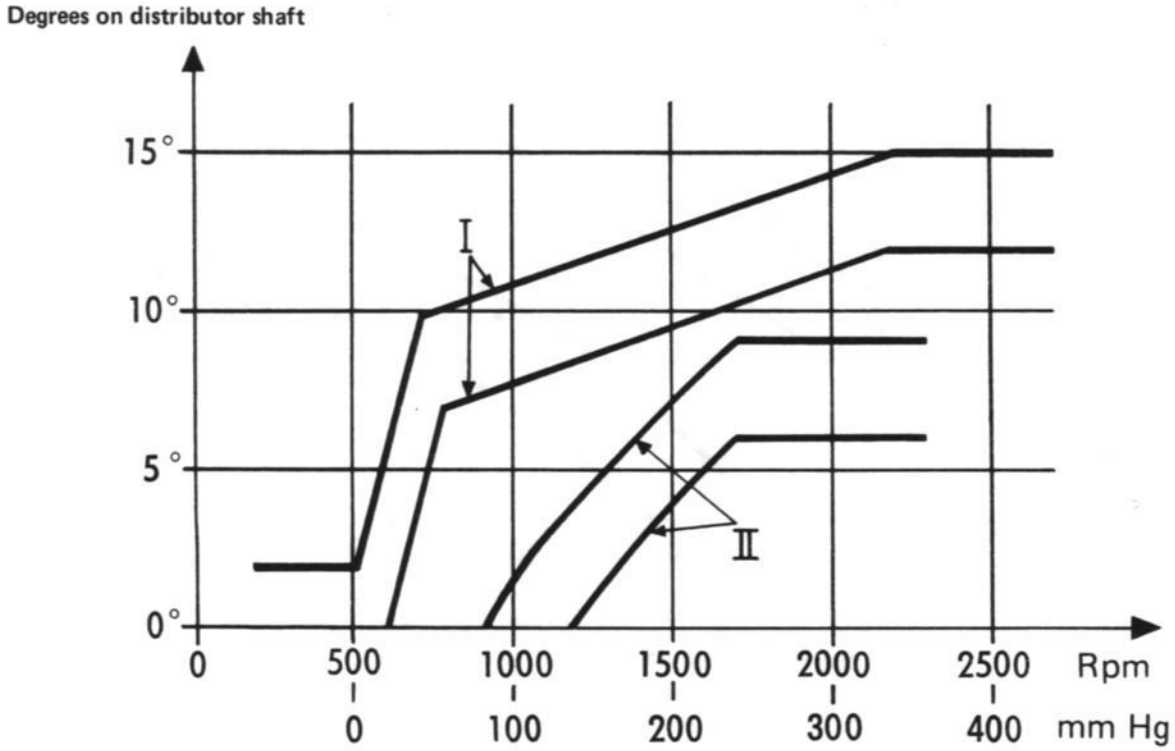

S 3250

CENTRIFUGAL AND VACUUM ADVANCE
DISTRIBUTOR 0 231 146 084 AND 0 231 146 092

Dwell angle 50 ± 2°
Contact pressure 18–22 oz.(500–630 g)

I = Centrifugal advance
II = Vacuum advance

Rpm = Distributor r.p.m.
mm Hg = Underpressure

DISTRIBUTOR, USA EXPORT MODEL

The distributor is in greatly indentical with the standard distributor. The distributor is however provided with a double acting vacuum control unit which depending on engine load condition can increase or decrease the ignition advance.

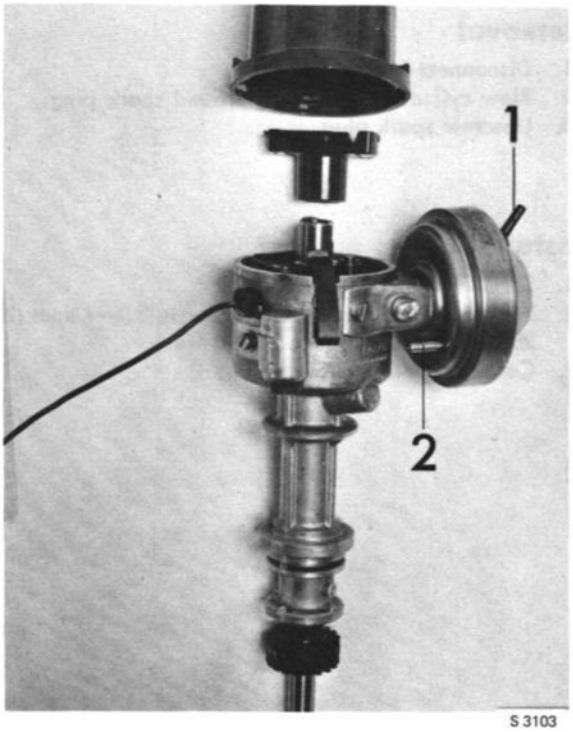

S 3103

DISTRIBUTOR USA AS FROM MODEL 1971

1. Connection for hose from the carburator
2. Connection for hose from the intermediate flange

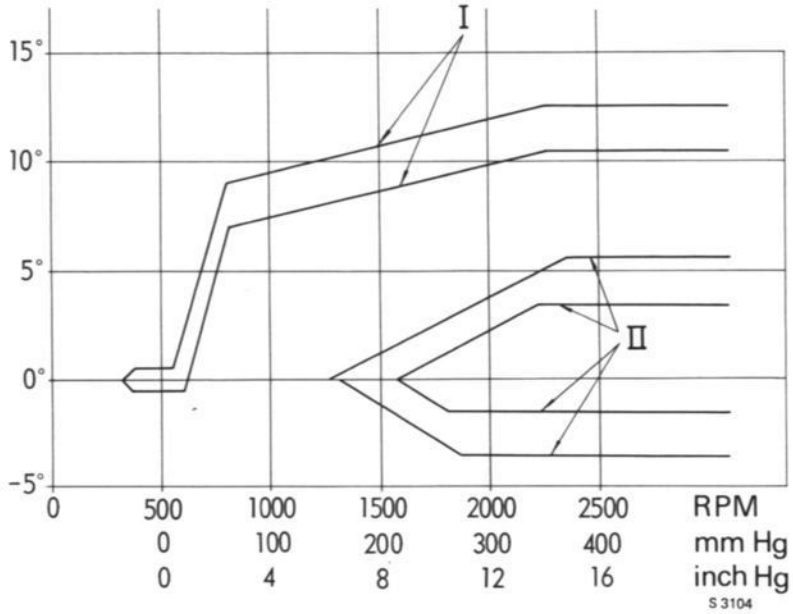

S 3104

CENTRIFUGAL AND VACUUM CONTROL DISTRIBUTOR, SAAB V4, USA EXPORT MODEL AS FROM MODEL 1971

I = Centrifugal advance
II = Vacuum advance

Rpm = Distributor r.p.m.
mmHg = } Underpressure
in.Hg = }

CHANGING SPARK PLUGS

Removal

1. Disconnect ignition cable.
2. Blow cylinder head clean around spark plug.
3. Unscrew spark plug.

Installation

1. Screw in spark plug by hand.
2. Tighten an additional 3/4 turn or to 3.0—4 kpm (22—28 ft. lb) using a spark plug wrench.
3. Connect ignition cable.

SPARK PLUG TEST

(spark plug removed)

1. Clean spark plug by sandblastning.
2. Check gap and adjust, if necessary be bending the side electrode.
3. Test spark plug under pressure in a spark plug tester.

SUPPRESSION OF RADIO INTERFERENCE

The engine is supplied with suppressed rotor and suppressed spark plug terminals, therefore no additional resistances need be fitted at the ignition coil and distributor on high tension wires.
The use of extra shielding in the resistance ignition cable has an adverse effect on the spark at the plugs, resulting in reduced engine output.

LIGHTING
Headlamps
General

The headlamps are recessed in the front panel. The left and right headlamp inserts are identical and can be fitted on either side without alteration. The headlamp bulbs have two filaments, one for high beam and one for dipped beam, regulated with a foot dipper switch. In the Monte Carlo, and in the R.H.D. SAAB 95/96 as well, the changing-over from high beam to dipped beam is, however, made by means of the flasher-switch lever. Up to and including the 1968 models, all cars to the U.S.A. are, however, equipped with foot dipper switch.
As from the 1969 model, all cars have a handoperated device for dimming and for headlight flashing.

A warning lamp glows red or blue when the headlamps are on high beam. The dipper switch is located on the lower part of the dash panel to the left of the pedals. The car is equipped with left-dipping or right-dipping asymmetric lamps, or — for certain markets — Sealed Beam units.
To modify the asymmetric lamps so that they produce ordinary symmetric light, for instance when travelling by car abroad, the asymmetric section can be masked with untransparent tape or in some other suitable way.

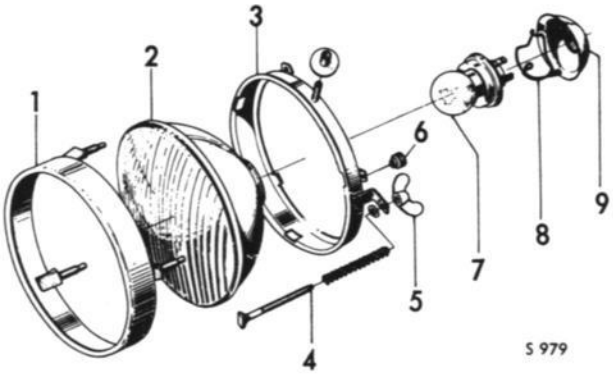

HEADLAMP, ASYMMETRIC, LEFTHAND AND RIGHTHAND TRAFFIC

1. Ring
2. Insert with glass
3. Adjusting ring
4. Adjusting screw
5. Adjusting nut
6. Mounting nut
7. Bulb
8. Fastening spring
9. Rubber seal

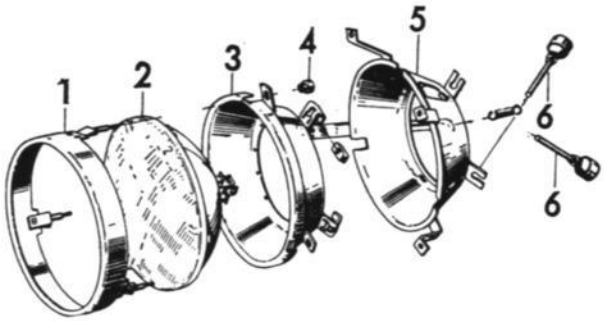

HEADLAMP, SEALED BEAM

1. Ring
2. Sealed beam insert
3. Adjusting ring
4. Nut
5. Shell
6. Adjusting screw

Alignment of right-dipping and left-dipping asymmetric lamps

Alignment towards a screen, see illustrations.

1. **Check the tire pressures and place the unladen car on a flat surface about 16 1/2 feet (5 metres) from the screen.**
2. Switch on to dipped beam and shield one of the headlamps.
3. Check and adjust the **beam** so that the horizontal part of the light-dark border is exactly 2.4 in. (6 cm) lower than and to the left (to the right for left-dipping asymmetric lamps) of the measured headlamp center point — see illustration. The sloping part of the light-dark border must be entirely to the right (to the left for left-dipping asymmetric lamps) of the mark and thus meet the horizontal part exactly under the headlamp center.
4. Check the other headlamp in the same way.
5. Check that the full beam is evenly distributed. If the beam is unevenly distributed, or if it proves difficult to get correct dipped-beam settings, make sure that the bulb is correctly fitted or, if necessary, fit a new bulb.

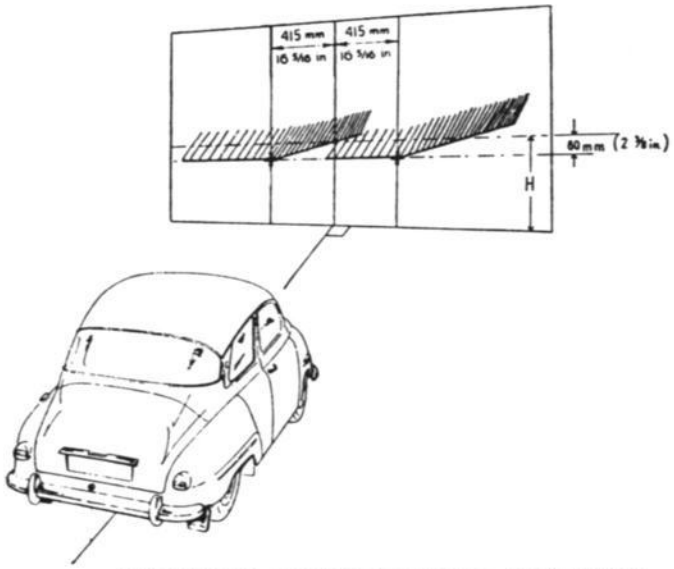

ALIGNMENT OF RIGHT-DIPPING ASYMMETRIC HEADLAMPS

H = Height of headlamp center above ground

Alignment of sealed beam units

Alignment towards a screen, see illustration.
The various lines on the screen correspond to: the center line of the car 1, the vertical center lines of the two headlamps 2—2, and the horizontal center lines of the headlamps 3—3.

1. **Check the tire pressures and place the unladen car about 24 1/2 feet (7.5 meters) from the screen.**
2. **Adjust line 3—3 so that it is horizontal and coincides with the center lines of the headlamps.**
3. **Switch on the high beam and shield one headlamp at a time.**
4. **Check and adjust the headlamps so that the beams come 2 in. (50 mm) under the intersections of lines 2—2 and 3—3. The tolerance limits which may not be exceeded by the center of the beam under any circumstances are marked by the black area on the screen. The transversal limits are 6 in. (150 mm) to the right or left of line 2—2, and vertically the center of the beam may not be above line 3—3 or more than 4 in. (100 mm) below line 3—3.**
5. **Check both headlamps and make sure that the beam is symmetric. If not, or if it proves difficult to get a correct setting, fit a new Sealed Beam unit.**
6. **If the high beams are correctly aligned it will not be necessary to adjust the dipped beams separately.**

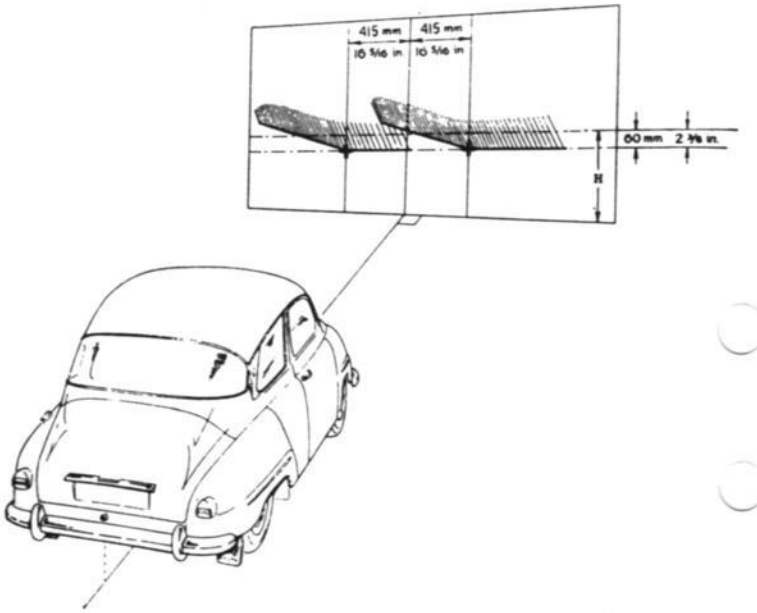

ALIGNMENT OF LEFT-DIPPING ASYMMETRIC HEADLAMPS

H = Height of headlamp center above ground

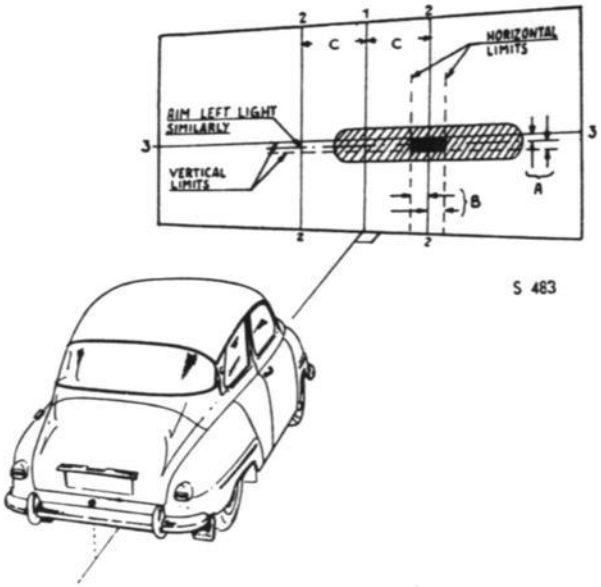

ALIGNMENT OF SEALED BEAM UNITS

1. Center line of car
2—2. Vertical center line of headlamp
3—3. Horizontal center line of headlamp

A = 2 in. (50 mm)
B = 6 in. (150 mm)
C = 5/16 in. (415 mm)

Changing headlamp bulbs

A headlamp bulb normally has full power for the first 100 hours of the burning time. Even if the lamps work longer, the light power decreases considerably after this time. In order to have as much light as possible, it is therefore advisable to change the headlamp bulbs about once a year, with normal driving.

Another factor of importance to effective lighting is that the reflector is undamaged and that the cable terminals have good contact.

1. Lift the hood and push the rubber grommet behind the headlamp out of the way.
2. Press and release the retainer spring, whereupon the bulb socket can be withdrawn.
3. Change the bulb. Use a clean cloth or the cardboard box when fitting the new bulb. Do not touch the bulb by hand.
4. Refit the lamp socket, making sure that the locating lug is correctly positioned. Make sure that the retainer spring holds the socket properly, keeping it in the proper position.
5. Refit the rubber grommet, making sure that it seals properly round the socket. Check that the cable terminals have good contact.

IMPORTANT

If the bulb is incorrectly located in the reflector, a faulty light pattern will result, and it will therefore be impossible to get a correct setting.

Changing the Sealed Beam unit

1. Disconnect the cables from the unit.
2. Remove the three nuts holding the chromed ring, and remove the ring.
3. Renew the Sealed Beam unit.
4. Make sure that the guide shoulders fit into the shell's recesses.

Parking and stop lights

General

The front parking lights are mounted in the front panel and are combined with the direction-indicating flashers. The rear parking lights are integral with the stop lights and flashers in the tail lights.

The stop-light switch is located in the engine compartment on the master brake cylinder.

Changing bulbs

1. Back off and remove the two retaining screws and remove the lens together with frame and screws.
2. Take the bulb out of its bayonet socket.
3. Clean the bulb socket and the lens.
4. Fit a new bulb. Make sure that good contact is obtained, particularly at the earth connection.
5. Refit the lens.

Number-plate light

Changing bulbs

1. Back off and remove the retaining screws and take off the lamp housing, enabling the bulb to be removed.
2. Clean the socket and the lamp housing.
3. When fitting the new bulb, make sure that it is firmly seated and that good contact is obtained.
4. Refit the housing and tighten the retaining screws. Check that sealing is effective between the rubber gasket and the housing.

Interior lighting

The ceiling lamp and switch are fitted on the ceiling rail. In the Saab 95 there are two interior lamps, one at the front and one at the rear of the passenger compartment. These lamps can be switched on either with the door switch or with the switch on the lamp housing.

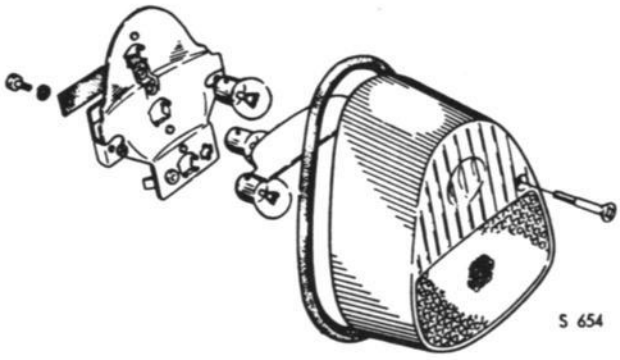

FLASHER, PARKING AND STOP LIGHT, SAAB 96 AND SPORT

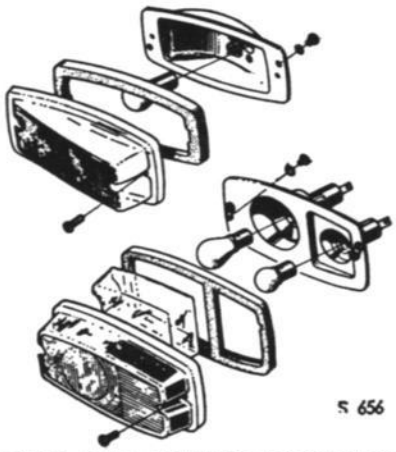

FLASHER AND PARKING LIGHT FRONT, STANDARD AND EXPORT VERSION

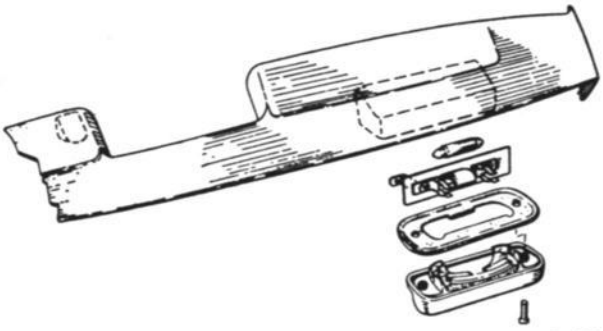

NUMBER-PLATE LIGHT, SAAB 96 AND SPORT

Changing bulbs

1. Back off and remove the two retaining screws on the glass shade. Remove the screws and shade, and change the bulb.
2. Make sure that both bulb retainers have good contact so that the bulb is firmly seated.
3. Refit the shade and tighten the screws. If contact is poor, take off the glass shade as described above and remove the base plate for repair or renewal.

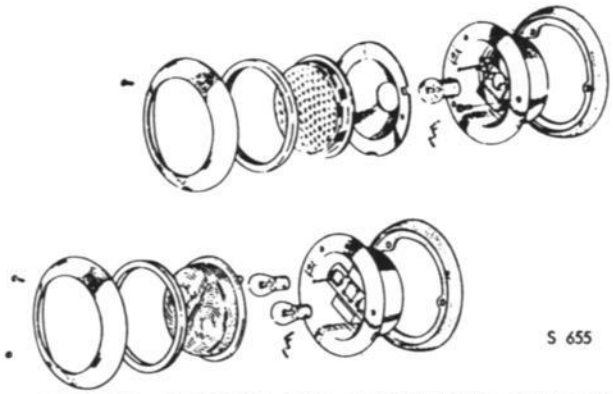

FLASHER, PARKING AND STOP LIGHT, SAAB 95

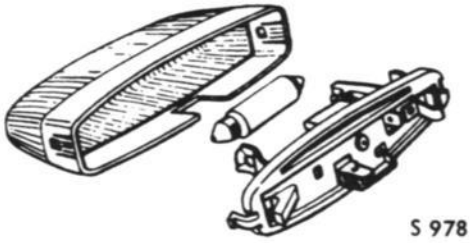

INTERIOR LIGHTING

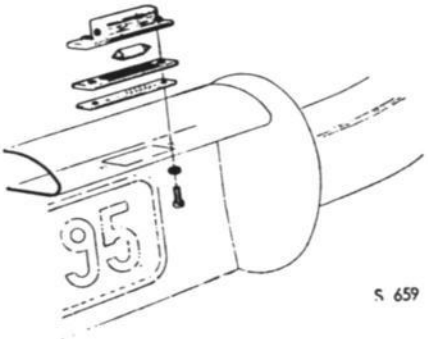

NUMBER-PLATE LIGHT, SAAB 95

LIGHTING AS FROM MODEL 1969

Headlamps

General

The headlamps are recessed in the front panel. The left and right headlamp inserts are identical and can be fitted on either side without alteration. The headlamp bulbs have two filaments, one for high beam and one for dimmed beam, regulated with the dimmer switch (flasher-switch) lever. A warning lamp on the instrument panel glows with blue light when the headlamps are on high beam. The car is equipped with right-dimming asymmetric lamps, or — for export markets — left-dimming asymmetric or Sealed Beam units.

To modify the asymmetric lamps so that they produce ordinary symmetric light, for instance when travelling by car abroad, the asymmetric section can be masked with untransparant tape or in some other suitable way.

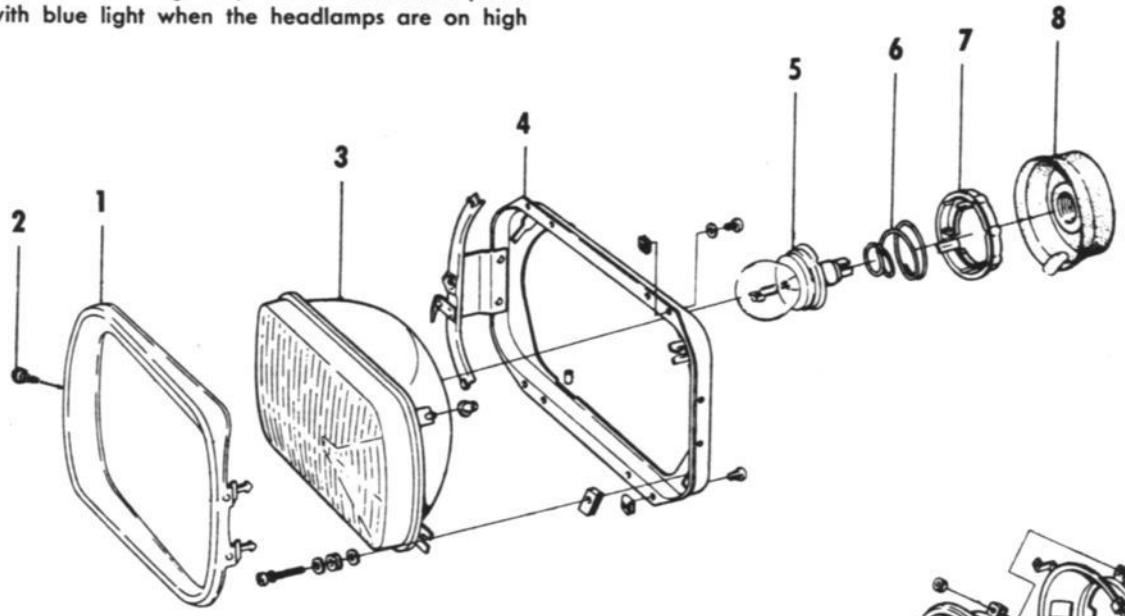

HEADLAMPS, EXPLODED VIEW

1. Decor frame
2. Fixing screw for decor frame
3. Headlamp insert
4. Mounting plate
5. Bulb
6. Spring
7. Bayonet ring
8. Seal

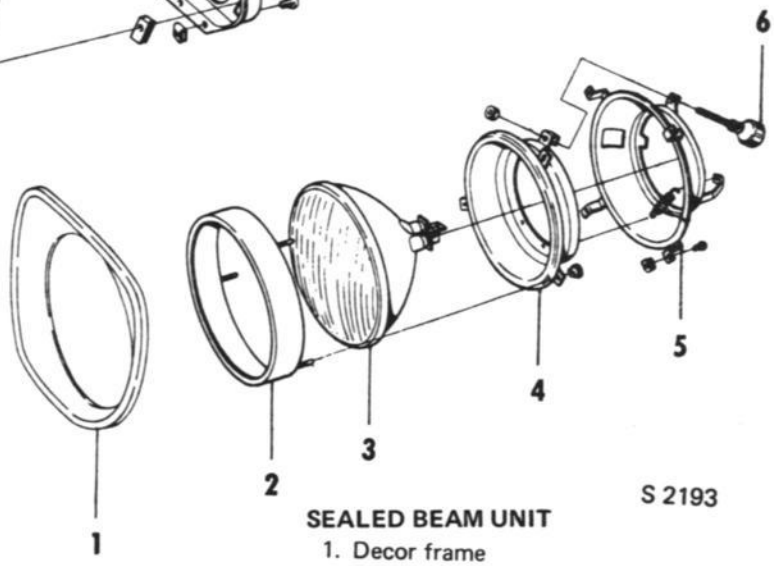

S 2193

SEALED BEAM UNIT

1. Decor frame
2. Insert retaining ring
3. Sealed Beam unit
4. Adjustment ring
5. Ring
6. Adjustment screw

Changing headlamp insert

1. Open hood, pull out bulb connector.
2. Close hood, loosen decor frame screw, remove decor frame.
3. Loosen the four screws which retain the headlamp. Lift out headlamp along with mounting plate.
4. Slacken the adjustment screws, until they can be pulled out of the headlamp insert attachments. Remove the insert from the mounting plate. Fitting is made in the reverse order.

> NOTE
>
> When changing headlamp insert or bulb, always align the headlamps.

Alignment of left-dimming and right-dimming asymmetric lamps

Alignment of lamps is usually made by means of special devices. If such an equipment is not available, align towards a screen according to the following directions.

1. Remove decor fram in order to uncover adjustment screws.
2. Check the tire pressures and place the unladen car on a flat surface approx. 16 1/2 feet (5 metres) from the screen.
3. Switch on to dimmed beam and mask one of the headlamps.
4. Check and adjust the beam so that the horizontal part of the light-dark border is 2,21" (56 mm) lower than and to the left (to the right for left-dimming asymmetric lamps) of the measured headlamp center point see fig. The sloping part of the light-dark border must be entirely to the right (to the left for left-dimming asymmetric lamps) of the mark and thus meet the horizontal part under the very middle of the headlamp center.
5. Check the other headlamp in the same way.
6. Check that the full beam is evenly distributed. If the beam is unevenly distributed, or if it proves difficult to get correct dimmed-beam settings, make sure that the bulb is correctly fitted or, if necessary, fit a new bulb.

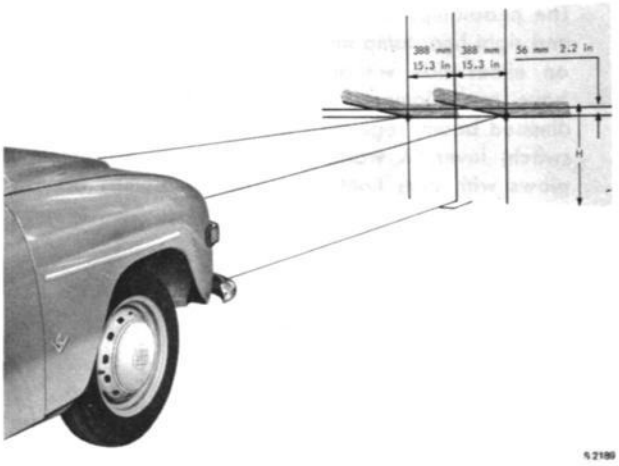

ALIGNMENT, TOWARDS SCREEN, OF LEFT-DIMMING ASYMMETRIC HEADLAMPS

H = Height of headlamp center above ground

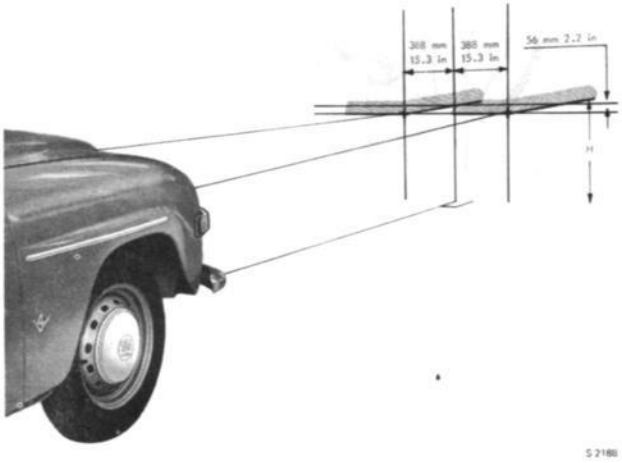

ALIGNMENT, TOWARS SCREEN, OF RIGHT-DIMMING HEADLAMPS

H = Height of headlamp center above ground

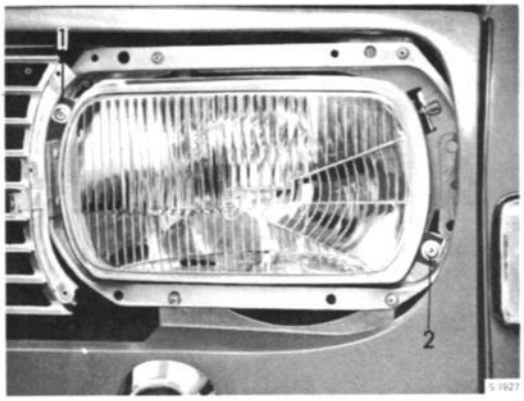

SCREWS FOR ADJUSTING HEADLIGHTS

1. Screw for horizontal adjustment
2. Screw for vertical adjustment

Changing headlamp bulbs

A headlamp bulb normally has full power for the first 100 hours of the burning time. Even if the lamps work longer, the light power decreases considerably after this time. In order to have as much light as possible, it is therefore advisable to change the headlamp bulbs about once a year, with normal driving.
Another factor of importance to effective lighting is that the reflector is undamaged and that the cable terminals have good contact.

1. Lift the hood and turn up the rubber cap behind the headlamp.
2. Pull off the connector.
3. Press in the bayonet ring, and turn it counter-clockwise.The ring and the lamp can then be pulled out.
4. Fit a new bulb. Do not touch the bulb with the hand. Check that the lamp socket locating lug points downward and fits properly in the recess for the headlamp insert.
5. Fit the bayonet ring. Check that the spring secures the lamp socket properly in the correct position.
6. Press the connector onto. Fold the rubber cap back, and make sure that it seals properly round the socket and that its draining points downward.

IMPORTANT
If the bulb is incorrectly located in the reflector, a faulty light pattern will result.

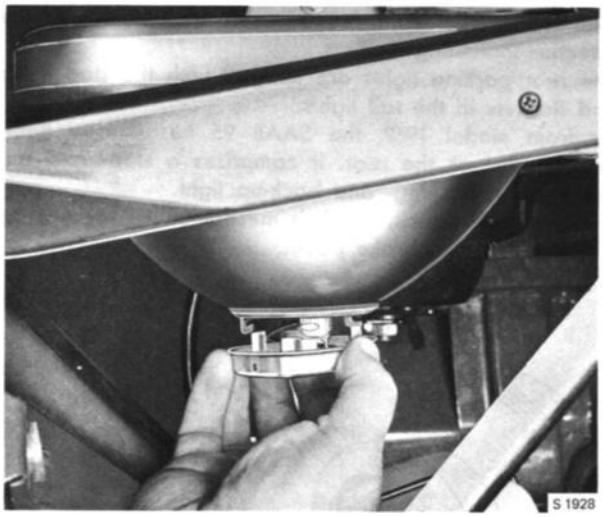

CHANGING HEADLAMP BULB

Parking and stop lights

General

As from the 1969 model, the front parking lights are mounted in the front fenders and combined with the direction-indicating flashers.

The rear parking lights are integral with the stop lights and flashers in the tail lights.

As from model 1969, the SAAB 95 has a new light-arrangement at the rear. It comprises a stop- and tail light, and a flashing- and back-up light.

The stop light switch, which is mechanical, is located on a bracket by the brake pedal.

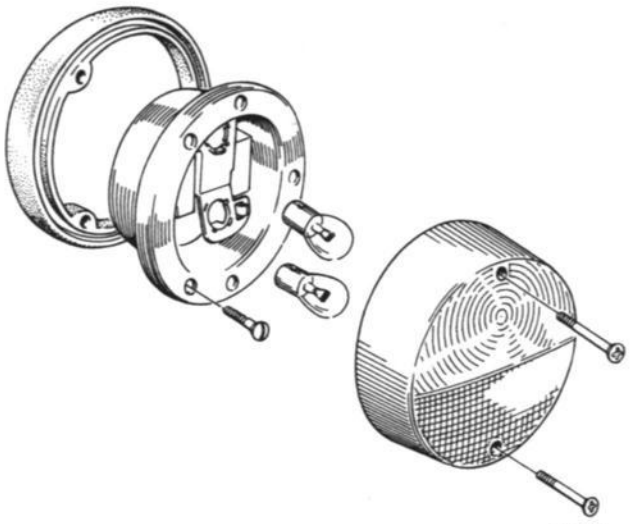

S 2190

FLASHING AND BACK-UP LIGHT AND TAIL- AND STOP LIGHT SAAB 95

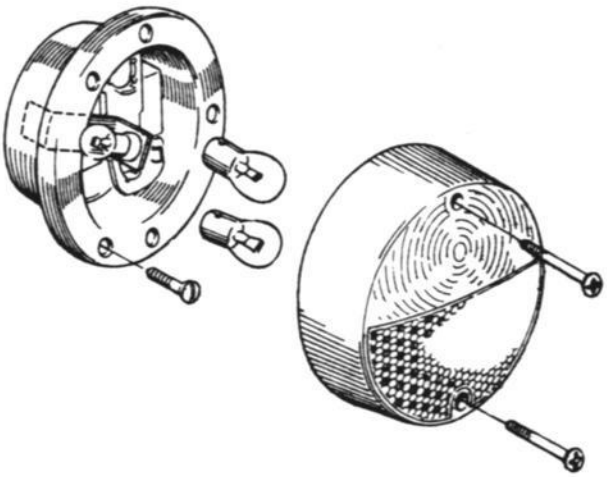

S 2194

FLASHING AND BACK-UP LIGHT AND TAIL- AND STOP LIGHT SAAB 95, USA VERSION

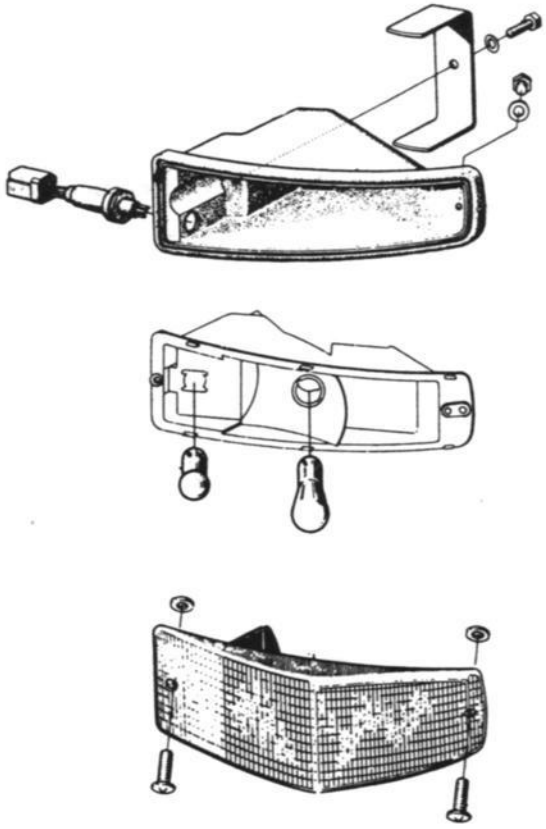

S 2191

PARKING- AND FLASHING LIGHT, FRONT

DIRECTION INDICATORS

General

The direction indicators consist of flashing lights at front and rear. At the front, the flashers are combined with the parking lights and flash with white or (as from model 1969) orange light. At the rear, separate lamps are provided for the flashers. These are mounted in the same housings as the stop lights and tail lights and flash with orange light.

The flasher unit, which is installed under the instrument panel, is combined with a control relay which indicates, by means of green warning lamps on the instrument panel, that the direction indicator is on and that both lamps are working.

If one of the flashers fails to operate, the warning lamp will not glow and the remaining light will flash more rapidly. If the flasher unit is in good condition and correct bulbs are fitted, the direction indicator will flash at the rate of 60—120 flashes per minute.

The flasher unit is not adjustable. If the other parts of the direction-indicating system (switch, wires and lamps) are in good order, erratic flashing must be due to a faulty flasher unit. In these circumstances, a new flasher unit must be fitted.

As from model 1966, the flasher in cars for USA serves also as sender for the warning flasher system. That relay is of a special type, and — in case of replacement — must not be confused with relays of types formerly used. Instructions for attachment of the direction-indicator switch and return mechanism are given below.

> NOTE
>
> **The fitting of bulbs with incorrect ratings will result in abnormal flashing frequency.**

Direction indicator return yoke

The clearance between the return yoke and the projection on the directional indicator switch should be 0.008–0.024 in. (0.2–0.6 mm) with the switch at neutral. Adjust by inserting shims between the switch and the column stand.

> NOTE
>
> Fit the return yoke so that its center axis coincides with the center axis of the switch housing, when the wheels are straight ahead.

HORNS

General

The horns are mounted inside the front panel. One high-pitched and one low-pitched horn are harmonized to give a high-penetration signal.

If the horns produce a discordant tone, first localize the defective horn and adjust by turning the contact screw, marked with red paint, on the rear of the horn until a pure note is obtained.

Signaling device up to and incl., model 1967

1. Disconnect the horn lead at the joint sleeve under the instrument panel.
2. Release the central button by prying carefully under its edge with a knife or similar implement. See fig.
3. Disconnect the horn lead from the contact plate.
4. Back off and remove the nut and take away the spring washer.
5. Remove the horn ring.

Installation

Install the horn ring and the spring washer and tighten up the nut.
Reconnect the horn lead to the contact plate.
Install the central button so that the three springs on the horn ring enter the recesses on the botton of the button.
Reconnect the horn lead.

REMOVAL OF HORN BUTTON UP TO AND INCL. MODEL 1967

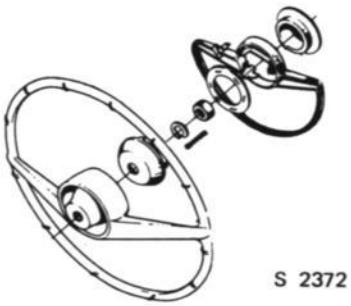

STEERING WHEEL AND SIGNALING DEVICE UP TO AND INCL. MODEL 1967

Signaling device models 1968 and 1969

General

On the 1968 and 1969 models of SAAB 95 and 96, the horn is operated with the same lever as is used for the windshield wipers and the electric windshield washer. To sound the horn, the lever is moved towards the steering wheel.

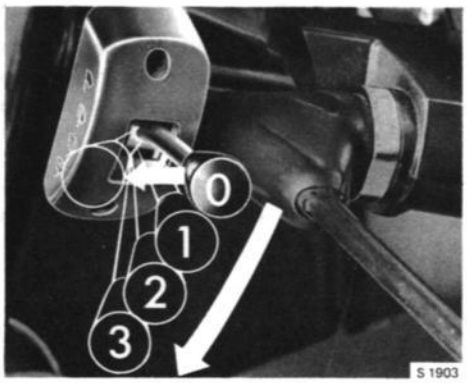

SIGNALING DEVICE, MODEL 1968 AND 1969

Horn: Move the lever towards the steering wheel (positions 0–3).

0. Windshield wipers, rest position
1. –"– –"– , low speed
2. –"– –"– , high speed
3. –"– –"– , high speed + washer

Signaling device as from model 1970
Removal

Remove the guard with the horn contact from the steering wheel by undoing the four screws which are accessible from under the steering wheel. Next, back off and remove the two nuts which hold the horn contact to the guard.
Reassembly takes place in the reverse order.
To remove the sliding contact, commence by removing by removing the steering wheel – see Chapter 6.
The sliding contact can then be detached from the casing by undoing the retaining screw.

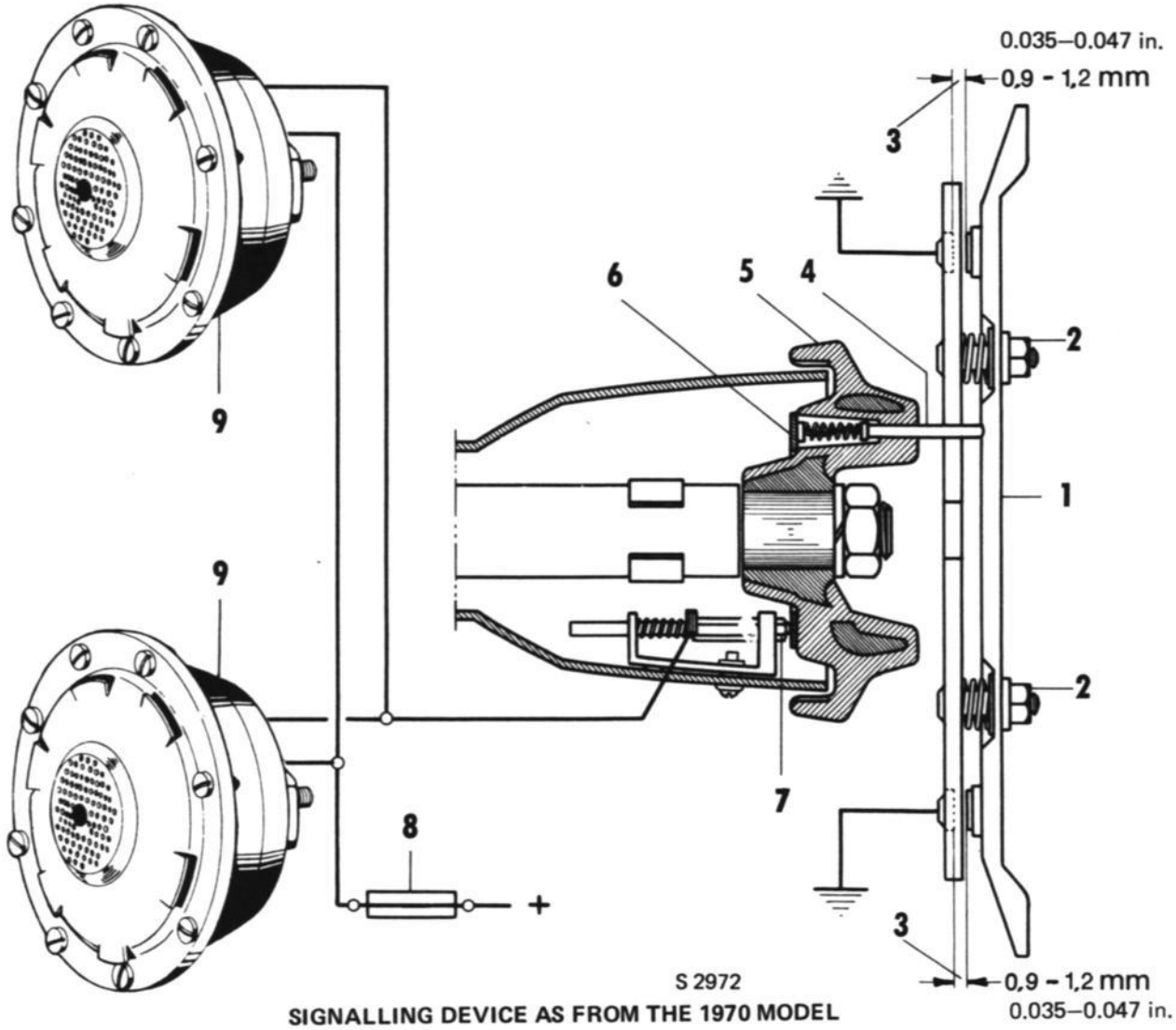

SIGNALLING DEVICE AS FROM THE 1970 MODEL
CROSS-SECTION

1. Horn contact
2. Adjusting nut
3. Contact gap
4. Spring-loaded contact
5. Steering wheel
6. Slip ring
4. Sliding contact
8. Fuse, 8A
9. Horn

WINDSHIELD WIPER AS FROM MODEL 1967

General

The windshield wiper motor is of the Lucas make and can be set for two wiper speeds. The higher speed is intended for fast driving in heavy rain. During heavy snowfalls or when the windshield is almost dry, the lower speed should be used to avoid overloading the wiper motor.
The motor has an automatic "parking device", which make them stop always in a horizontal position, notwithstanding the position they are in when they are switched off.

Function of wiper motor, Lucas make

In the Lucas wiper motor the movement is transmitted to the operating rods via a gear housing. Current for the wiper motor is supplied by the battery through the ignition contact via a fuse and switch and a contact device in the gear housing. That device is connected during the largest part of the working cycle, thus giving the motor two alternative earth connections, if the switch is on. Every time the wiper blades are in their horizontal position, where they are normally parked, the contact in the gear housing cover is cut off. If the switch at that moment is not on, the motor stops and so will the wiper blades in this position. The parking position can be adjusted by slackening the gear housing bolts thus enabling the cover to be turned a little, which moves the fixed contact plate.

Lubrication

The motor armature is mounted in self-lubricating bearings. The gear housing is factory-lubricated. Periodical lubrication is not needed.

Windshield washer

The Saab 95 and 96 up to and incl. the 1967 model, are fitted with a mechanical windshield washer, the pump being combined with the switch for the windshield wipers.
The Monte Carlo and, as from the 1968 model, also the SAAB 95 and 96, have an electric pump which is started with the same switch as is used for the windshield wipers.

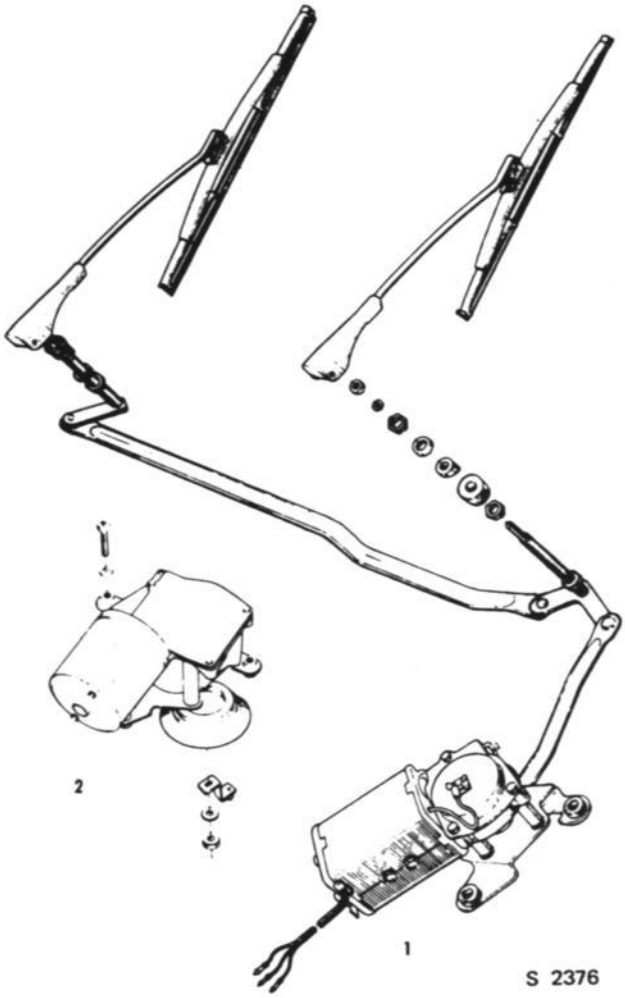

WINDSHIELD WIPER MOTOR, LUCAS MAKE

1. Windshield wiper motor up to and incl. model 1969
2. Windshield wiper motor as from model 1970

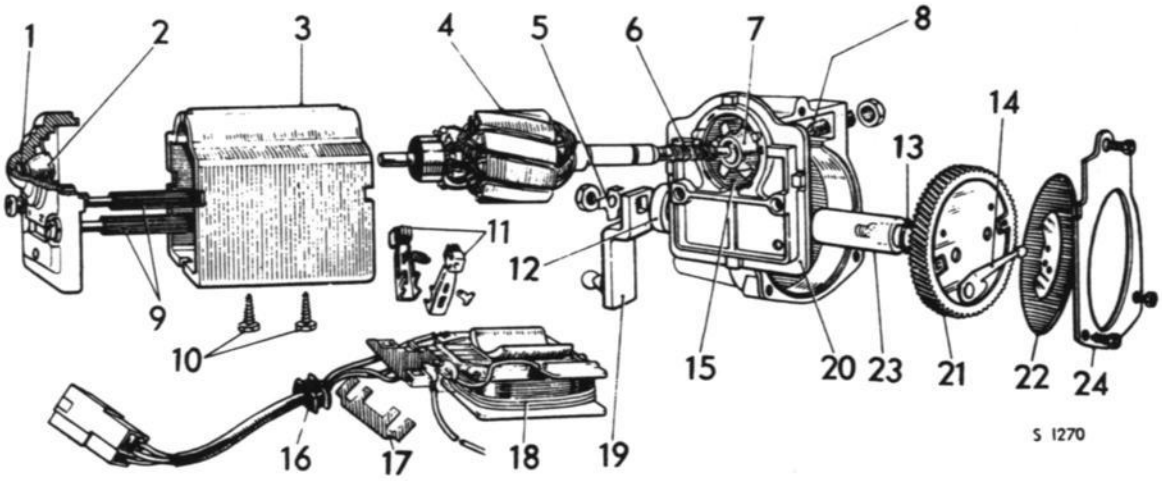

WINDSHIELD WIPER MOTOR, LUCAS UP TO AND INCL. MODEL 1969

1. Thrust pad
2. Self-aligning spherical bearing
3. Yoke
4. Armature
5. Tab washer
6. Worm gear
7. Self-aligning spherical bearing
8. End play adjuster & thrust pad
9. Through bolts & insulating sleeves
10. Pole piece securing screws
11. Brushgear
12. Bushing
13. Washer
14. Limit switch moving contact
15. Bearing retaining ring
16. Grommet
17. Brush lever retainer
18. Field coil
19. Rotating output crank
20. Drive end bracket
21. Final gear
22. Limit switch fixed contact plate
23. Porous bronze bushing
24. Gear box cover

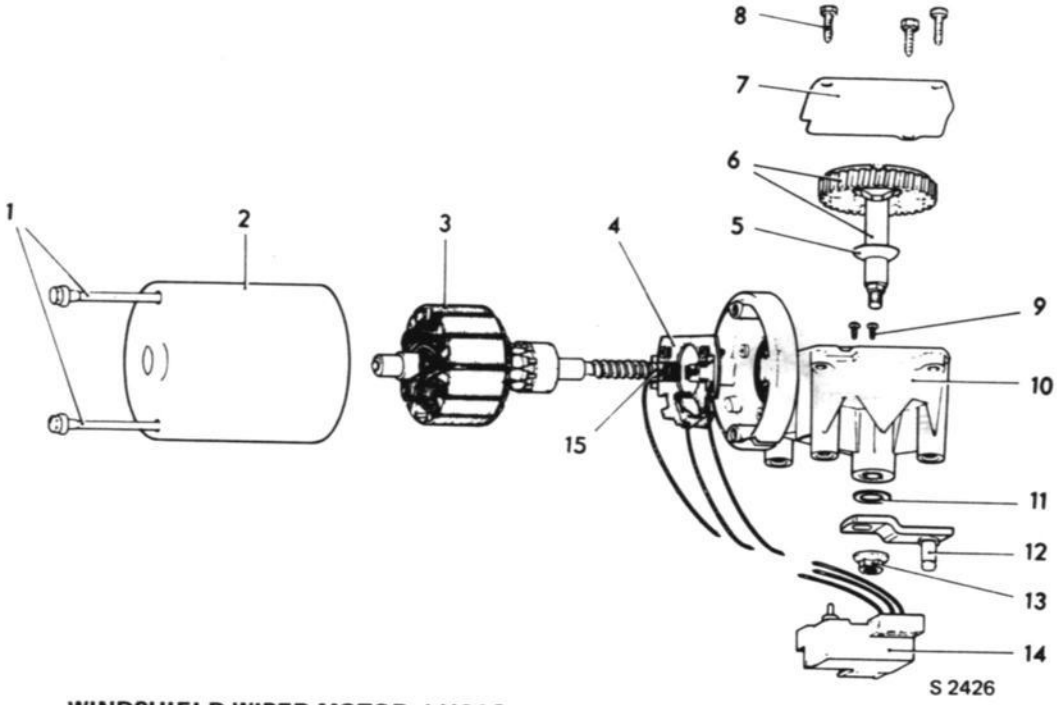

WINDSHIELD WIPER MOTOR, LUCAS MODEL 1970

1. Retaining screws, casing
2. Casing and bearing
3. Armature
4. Brushgear
5. Cupped washer
6. Shaft and gear
7. Gear box cover
8. Retaining screws, cover
9. Screws, parking contact
10. Gear box
11. Flat washer
12. Drive arm
13. Nut, drive arm
14. Parking contact

HEADLAMP CLEANING DEVICE

As from the 1971 model, the SAAB 95/96 is equipped for certain markets with a cleaning device for the headlamps. The device consists of a wiper and washer unit driven by separate electric motors and started with the same switch as the windshield wipers and-washers.

Electrical connection and operation
Switch in position 0

If the ignition lock is engaged, voltage is available at the wiper-motor connections 4 and 53a respectively. The motors take up the parking position when a spring-loaded contact in each motor has broken the connection between 4 and 2 in the windshield wiper motor and between 53a and 53 in the headlamp wiper motor. The motors start very quickly when connections 1 and 31 b respectively have been actuated by the contact device and thus shorted the rotor windings. This is necessary in order for the motor to have time to stop during the time the cam is actuating the contact. Otherwise, the motor would continue to rotate despite the switch being switched off, especially when the wipers move easily and the voltage across the motor is high.

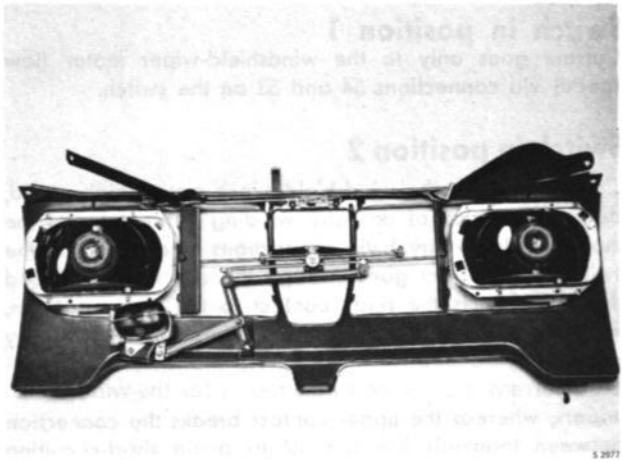

HEADLAMP CLEANING DEVICE

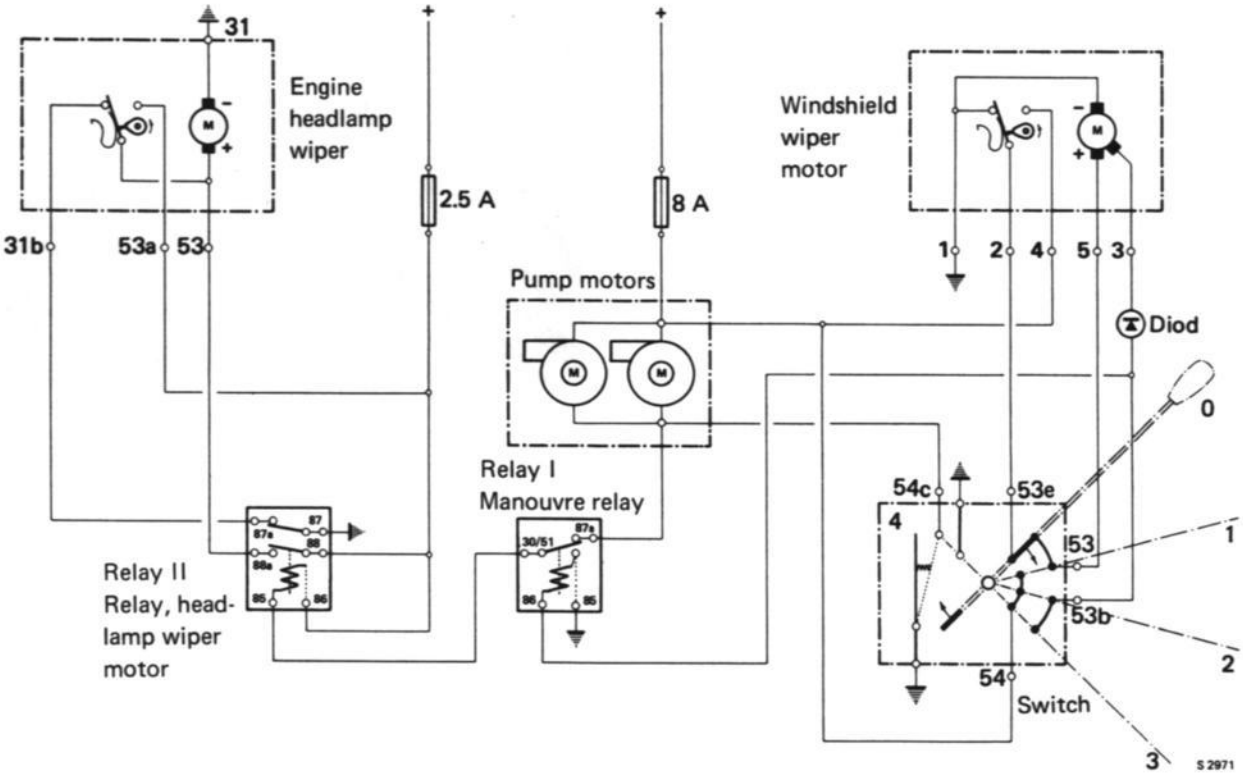

ARRANGEMENT DIAGRAM, ELECTRIC WIRING, HEADLAMP CLEANERS

Switch in position 1

Current goes only to the windshield-wiper motor (low speed) via connections 54 and 53 on the switch.

Switch in position 2

Current goes to the windshield-wiper motor (high speed, due to activation of an extra winding in the rotor of the motor) and to relay 1 via connections 54 and 53b on the switch. The current goes through the coil in relay 1 and the coil attracts the relay contact to the lower position, whereupon the coil in relay 2 is actuated and both relay contacts are pulled downwards. Via the lower relay contact, current is provided to the motor for the windshield wipers, whereas the upper contact breaks the connection between terminals 87a and 87 to avoid short-circuiting when the contact device in the motor interconnects connections 53 and 31 b.

A diode is connected before connection 3 on the windshield-wiper motor and serves to prevent current from going "backwards" through the extra winding in the wiper motor and thus switching on the headlamp wipers when the windshield wipers are operating at low speed (position 1).

Switch in position 3

The same functions as in position 2, but the switch now connects connections 54 c with earth and by this means both pump motors are engaged.

Switch in position 4

When the switch lever is moved towards the steering wheel, a spring-loaded contact is activated and switches on both pump motors by earthing terminal 54 c. At the same time, the headlamp wipers are also switched on in that connection 85 on relay 2 is connected to earth via relay 1 (the contact in this relay in the upper position) and connection 54 c.

Disassembly

1. Remove the decor frames from the headlamps and detach the hose connections from the jets.
2. Remove the three grille plates.
3. Remove the two springs at the wiper-shaft bushings and screen plates.
4. Detach the crank arm from the shaft of the wiper motor.
5. Detach the long crank arm from the bearing in the front panel.
6. Detach the wiper-shaft centre bushing from the front panel.
7. Remove the crank arms, push-rods and shafts sideways.
8. Detach the wiper-motor cable connection.
9. Remove the wiper motor by taking away two screws and backing off the nut on the wiper-motor spindle.

Reassembly takes place in the reverse order.

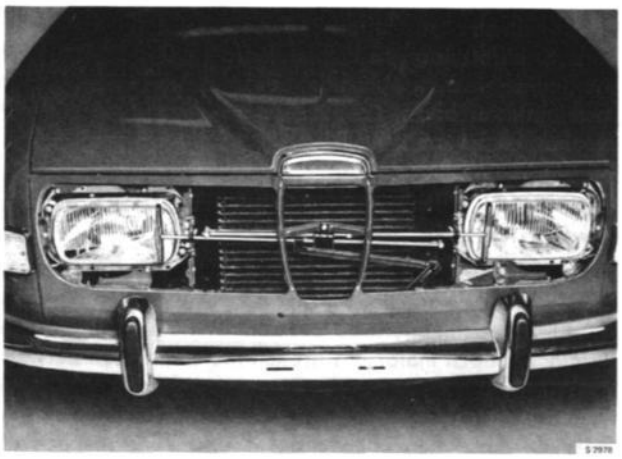

DECOR FRAMES AND GRILLE PLATES REMOVED

NOTE!

The screw in the crank arm at the wiper motor must be tightened with o torque of 7.23 ft.-lb. (1 kpm) and secured with Loctite.

Before springs and bushings are refitted, the screen plates must be smeared on both sides round the holes for the bushings with SAAB Special Chassis Grease.

CRANK ARM SCREW

Adjustment

The nylon cords must be stretched so that the same wiping length is obtained on both sides and so that backlash is eliminated.

1. The parking position of the wipers is adjusted by altering the length of the short push-rod.

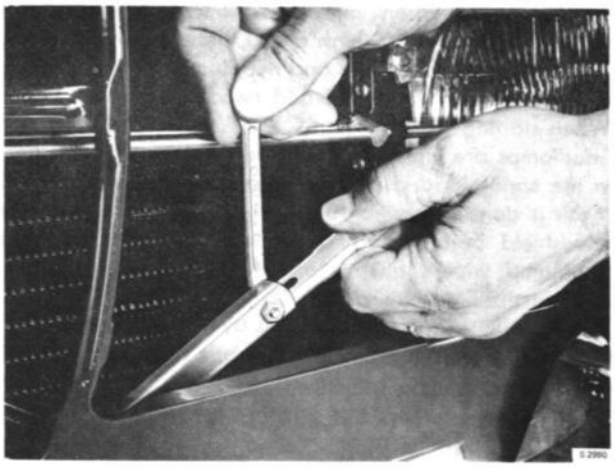

ADJUSTING THE LENGTH OF THE SHORT PUSH-ROD

2. Adjust the tension of the cords by slackening the locking screw in the retaining bushings for the cords and then moving these in order to stretch the cords.

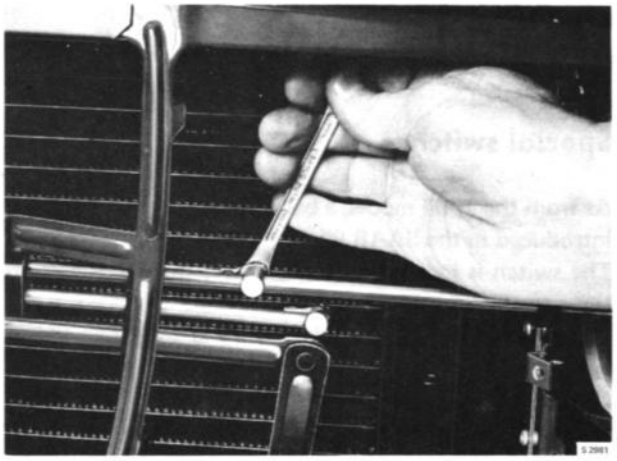

ADJUSTMENT OF CORD LENGTH

3. Check that the wiper blade rests properly againts the headlamp glass and that the bushing does not seize in the hole in the screen plate which should be smeared with SAAB Special Chassis Grease.

Changing wiper blades

1. Remove the circlip from the wiper shaft and pull off the wiper blade.
2. Fit a new wiper blade and refit the circlip.

CHANGING WIPER BLADES

ELECTRICAL CONTROLS AND SWITCHES

General

The ignition lock is located on the steering column stand and is combined with the starter switch.
Apart from for ignition, current is provided through the ignition lock for the following items of equipment and lamps: fresh-air heater, windshield wipers, fuel gage, windshield washer and warning lamp for charging. On the Monte Carlo, and as from the 1969 model also on the SAAB 95, current is also provided in the same way for the back-up lights.
The headlamps are operated by means of a pull switch combined with a rheostat. The intensity of the instrument lighting is regulated by turning the knob when pulled out. As from the 1968 model, the rheostat is separated from the light switch and placed to the left of it.
As from the 1970 model, the headlamps are regulated by means of a toggle switch on the instrument panel.
As from the 1971 model, the switch is provided with a catch to prevent unintentional switching off.
In the SAAB 95 and 96, the headlamps are dimmed with a foot dimmer switch, while in the SAAB 95 and 96 RHD and SAAB 95/96 as from the 1969 model switching over between high beam and dipped beam is done by lifting the lever for the direction-indicator (flasher) switch, whereupon a dimmer relay is actuated and dims the beam.
When the direction-indicator (flasher) lever is moved towards the steering wheel the headlight signal device is switched on.
The switch for the fresh-air heater fan has two positions, full speed and half speed.
In the SAAB 95 and 96 up to and including the 1967 model, the windshield-wiper switch is combined with the mechanical windshield washer and is switched on by turning the knob.
In the Monte Carlo, the windshield wipers are switched on and off by means of a pull switch with two positions. In the first position, only the wiper motor runs, while in the second position both the wiper motor and the electric windshield washer work.
On all cars as from the 1968 model, the windshield wipers, electric windshield washer and horns are operated with a lever located to the right of the steering column. This lever has four positions: neutral, windshield wipers low speed, windshield wipers high speed and windshield wipers high speed plus windshield washer. The horns are activated by moving the lever towards the steering wheel.
As from the 1970 model, the horn contact is located in the steering wheel guard.
As from the 1970 model, the windshield washer is engaged when the lever is moved towards the steering wheel.
As from the 1971 model, headlamp wipers and-washers have been introduced for certain markets.
The switch for the windshield wipers, headlamp wipers and washers has the following positions:

0. Off
1. Windshield wipers, low speed
2. Windshield wipers, high speed, and headlamp wipers
3. Windshield wipers, high speed, headlamp wipers and washing of windshield and headlamps
4. Washing of windshield and headlamps.

When starting from position 0, 1 or 2, the windshield and headlamps are washed during the time the switch is held in the spring-loaded position against the steering wheel. If this is done in position 0, it is thus possible to wash the windshield before starting the windshield wipers. (The headlamp wipers always operate while washing, i. e. even in position 4.)
The stop-light switch is actuated by the pressure of the brake fluid and completes the circuit to the stop-lights when a certain brake pressure is reached.
As from chassis No. 439.334, SAAB 96, and 46.816, SAAB 95, a mechanically operated stop-light switch has been introduced. This switch is actuated directly by the brake pedal and completes the circuit to the stop-lights.
As from the 1968 model, a brake warning system has been introduced. If the brake-pedal stroke becomes abnormally big, the pedal actuates a switch located above it. This switch then completes the circuit to a warning lamp in the speedometer.

Special switches

As from the 1969 model, a back-up light switch has been introduced in the SAAB 95.
The switch is located by the gearbox and is actuated by the gear-shift mechanism.
The back-up light is switched on and off when the reverse gear is engaged and disengaged.
Monte Carlo:
Switch for fog light.
Switch for long-range light. Lights only when the headlamps are on high beam.

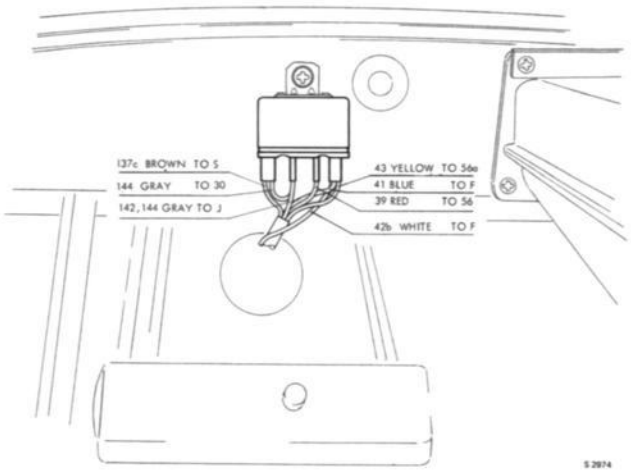

CABLE CONNECTION, DIMMER RELAY, 1969 MODEL

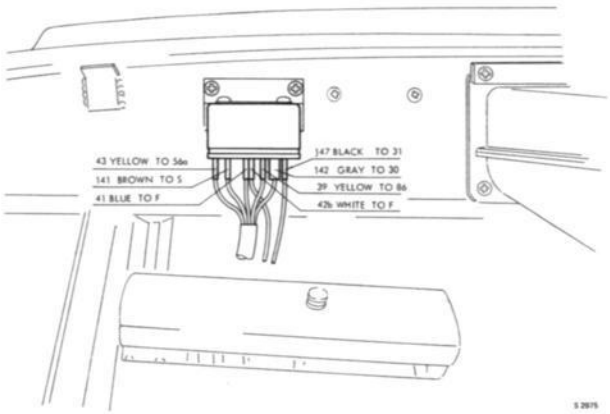

CABLE CONNECTION, DIMMER RELAY, AS FROM 1970 MODEL

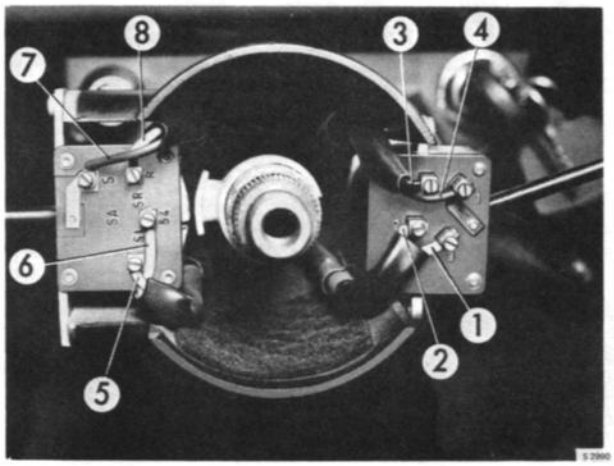

CABLE CONNECTIONS AND CABLE COLOURS AT SWITCH FOR WINDSHIELD WIPERS AND WASHERS AND FOR SIGNAL HORN, 1969 MODEL

1. 16e grey to 3
2. 17e blue to 2
3. 88e black to W
4. 71 black to 1

CABLE CONNECTIONS AND CABLE COLOURS AT SWITCH FOR FLASHERS, DIMMING AND HIGH-BEAM SIGNAL

5. 24b white to L
6. 22e green to 54
7. 137 brown to S
8. 24a yellow to R

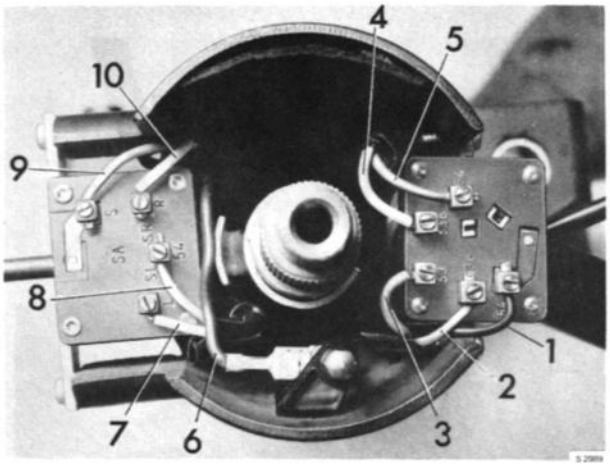

CABLE CONNECTIONS AND CABLE COLOURS AT SWITCH FOR WINDSHIELD WIPERS AND WASHERS AS FROM 1970 MODEL

1. 88e black to 54c
2. 17e blue to 53e
3. 15e red to 53
4. 16e grey to 53b
5. 14e brown to 54

CABLE CONNECTIONS AND CABLE COLOURS AT SWITCH FOR FLASHERS, DIMMING AND HIGH-BEAM SIGNAL AS FROM 1970 MODEL

6. 71 black to ground
7. 24b white to L
8. 22 green to 54
9. 141e brown to S
10. 24a yellow to R

CHANGING THE OIL-PRESSURE SWITCH

Removal

1. Disconnect lead.
2. Unscrew and remove oil-pressure switch·1.06 in. (27 mm) wrench opening.

Installation

NOTE!
Smear sealing compound on threads before installing.

1. Screw in oil-pressure switch and tighten to 1.2—1.5 kpm (9—10 ft. lb.).
2. Connect lead.

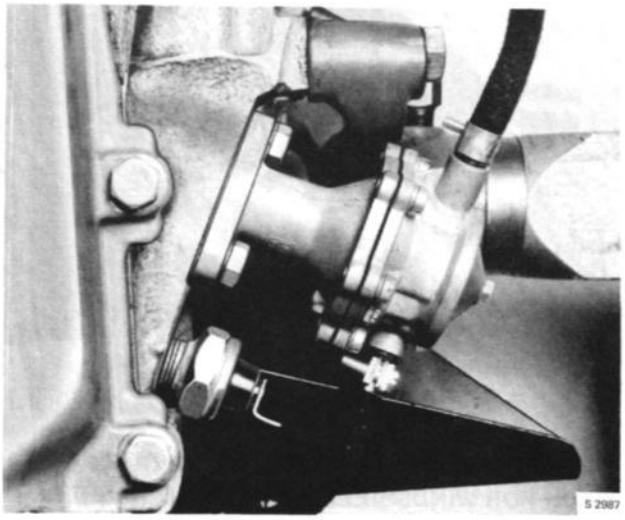

OIL-PRESSURE SWITCH

CHANGING THE ELECTRICAL TEMPERATURE TRANSMITTER

Removal

1. Drain off coolant.
2. Disconnect lead.
3. Unscrew transmitter. ½ in. (approx 13 mm) wrench opening.

Installation

NOTE
Smear sealing compound on threads before installing.

1. Screw in transmitter.
2. Connect lead.
3. Fill cooling system with coolant.
4. Run engine until hot and check temperature gauge reading.
5. Check coolant level and replenish if necessary.

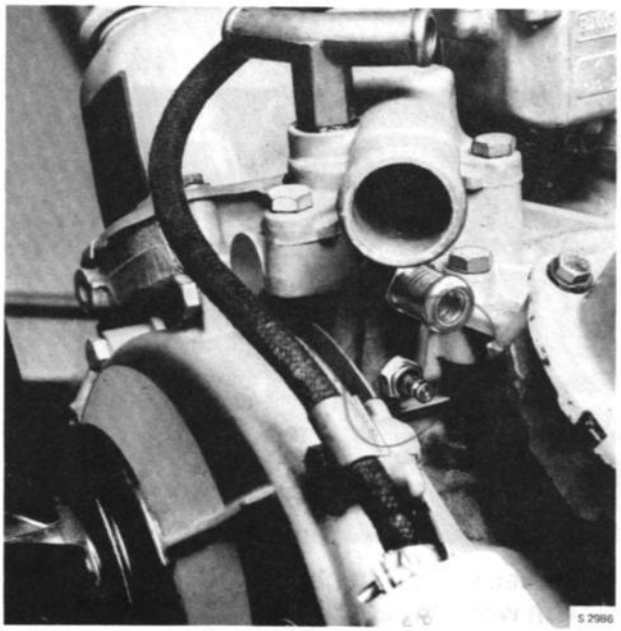

TEMPERATURE TRANSMITTER

WIRING AND FUSES

Wiring

The cables and wires lead the current from the battery or generator to the various items of consumer equipment. In order to protect the wiring and to reduce the risk of shorting, the wires are gathered into harnesses wherever possible, i.e. a number of individually insulated wires are carried in an enclosing plastic sheath.

The harnesses are divided into two groups, one at the dash panel and in the engine compartment, and one running to the rear part of the car. Provided that the wiring is fitted in strict accordance with the different wiring diagrams reproduced further on, removal and installation of wires and cables should not present any difficulties. The individual wires and cables in each harness are color-marked for ready identification in accordance with the numbers given in the diagrams and accompanying tables.

The cable connections are made with AMP connectors and thus require no soldering.

Make sure that all cables and wires are properly connected, thus avoiding unnecessary voltage drops and flashovers.

Make sure that the wire from the horn button is routed so that it will not get torn off when the steering wheel is turned.

If frequent fuse burn-out occurs, and if damaged insulation is suspected, check the insulation of the harnesses by testing. Bear in mind, however, that fuses will not burn out if a short occurs before the fuse.

When installing new wiring, always check positively that the rating of the selected wires and cables is adequate to cope with the load involved, and make sure that the cables are properly protected where they pass through panels and at clamps.

Fuses

To protect wiring, ammeter, etc., from abnormal current intensities, for instance in the event of a short circuit, and to reduce the fire hazard involved by such occurrences, the electrical system is provided with twelve 8-amp. fuses, grouped in a block attached to the R.H. side of the dash panel in the engine compartment. In addition to the aforesaid fuses, there is a 2.5-amp. fuse for the headlamp cleaning device. This fuse is located in i special holder.

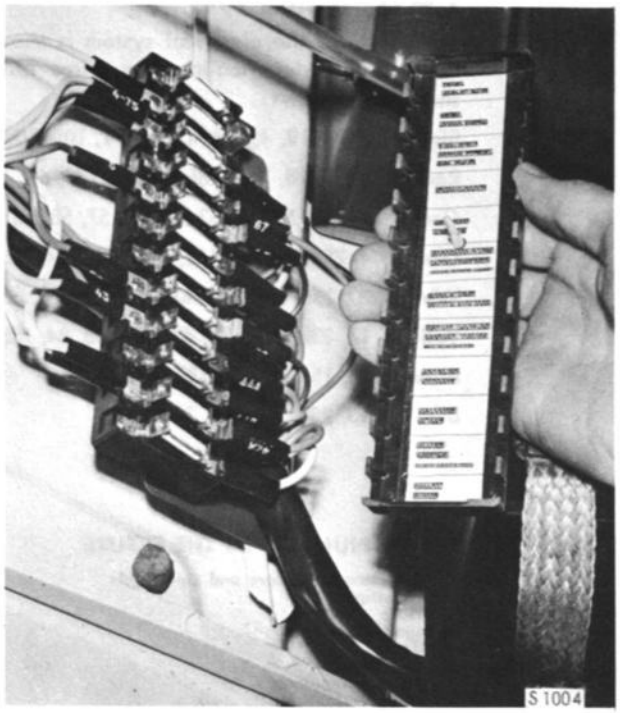

FUSE BLOCK

One of the fuses are intended for the protection of extra equipment or as reserve.

All the components included in the electrical system except the headlight (as from model 1969), instrument lighting and ignition system are fused. On the inside of the fuse-block cover is an identification text, showing which items are protected by the individual fuses.

IMPORTANT

When fitting a new fuse, take pains to secure good contact.

If wire fracture is suspected, check that the fuse concerned makes good contact before taking any further steps. Use a voltmeter for this check: the maximum permissible voltage drop is 0.1 V.

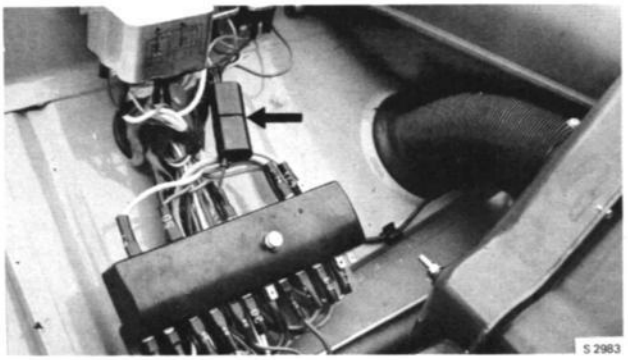

FUSE BOX, HEADLAMP CLEANING DEVICE

Wiring diagram Saab station wagon L.H.D. model 1967

The range of the electrical system is shown by the wiring system on the next page. To simplify the identification, the wires have been covered with insulation of different shades as follows:

Black	7, 18, 19, 45, 46, 47, 49, 71, 105, 109, 125, 135, 136, 138, 139, 140.
Red	5, 21, 28, 28e, 28f, 28g, 32, 39, 61, 63, 65, 67, 68, 72, 92, 111, 113, 126, 129.
Green	16, 22, 50, 51, 53, 54, 55, 57, 58, 60, 86, 87, 88, 101, 104, 110.
Grey	4, 25b, 29, 35, 44a, 62a, 62b, 64, 69, 70, 74, 75, 85, 93, 142.
White	20, 23b, 24b, 40, 40c, 42b, 66, 82, 83, 118, 122, 122e, 128a.
Yellow	17, 23a, 24a, 33, 43, 44b, 73, 84, 128b.
Brown	14, 15, 30, 130, 137, 137c.
Blue	13, 25a, 41, 42a, 112.

KEY TO NUMBERS IN THE FIGURE

1. Direction indicators and side lights
2. Headlights
3. Horn
4. Ignition coil
5. Spark plugs
6. Distributor
7. Voltage regulator
8. Alternator
9. Starter
10. Battery
11. Fuse box
12. Temperature gauge sending unit
13. Oil pressure switch
14. Stop light switch
15. Heater fan motor
16. Wiper motor
17. Direction indicator repeater lights
18. Charge indicator light
19. High beam indicator light
20. Oil pressure warning light
21. Electric clock
22. Temperature gauge
23. Speedometer with odometer
24. Fuel gauge
25. Dimmer switch
26. Flasher
27. Control relay for headlight flasher
28. Ignition and starter switch
29. Headlight switch and instrument illumination rheostat
30. Heater fan switch
31. Windshield wiper switch
32. Courtesy light switch
33. Courtesy light with switch
34. Horn button
35. Direction indicator switch with headlight flasher
36. Fuel tank gauge
37. Stop lights and direction indicators
38. Tail lights
39. Number plate lights

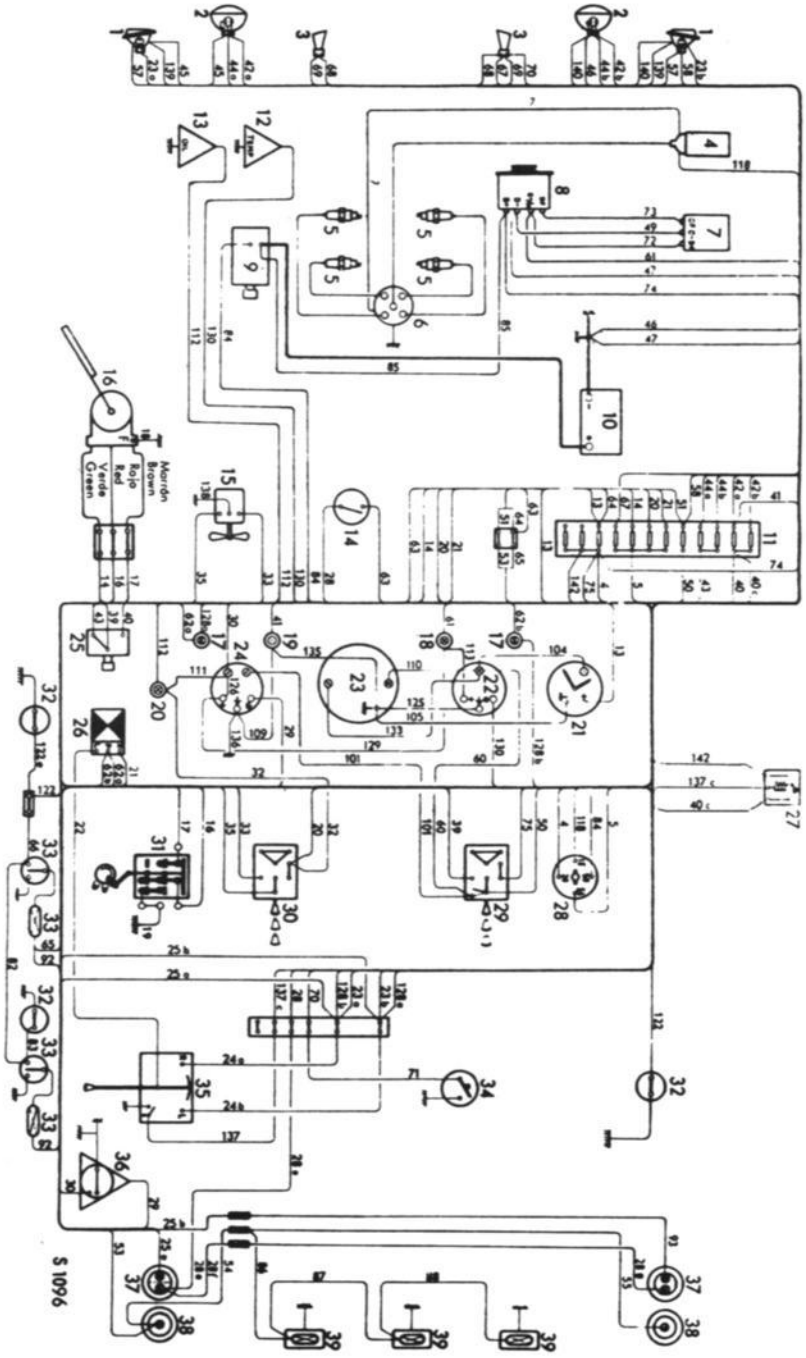

WIRING DIAGRAM SAAB STATION WAGON L.H.D. MODEL 1967

Cable numbers refer to table on opposite page.

Wiring diagram Saab station wagon L.H.D. model 1968

The range of the electrical system is shown by the wiring system on the next page. To simplify the identification, the wires have been covered with insulation of different shades, as follows:

Black 7, 45, 46, 47, 49, 71, 88, 88e, 105, 109, 124, 125, 135, 136, 138, 139, 140.

Red 5, 21, 28, 28e, 28f, 28g, 32, 39, 61, 63, 65, 67, 68, 72, 72e, 92, 111, 113, 116, 126, 129.

Green 22, 50, 51, 53, 54, 55, 57, 58, 59, 60, 86, 86e, 86f, 101, 104, 110.

Grey 4, 16, 16e, 25b, 29, 35, 44a, 62, 64, 69, 70, 74, 75, 85, 93, 142.

White 20, 23b, 24b, 40, 40c, 42b, 66, 82, 83, 118, 122, 122e.

Yellow 23a, 24a, 33, 43, 44b, 73, 84, 115.

Brown 14, 15, 30, 89, 130, 137, 137c.

Blue 13, 17, 17e, 25a, 41, 42a, 112.

KEY TO NUMBERS IN THE FIGURE

1. Direction indicators and side lights
2. Headlights
3. Horn
4. Ignition coil
5. Spark plugs
6. Distributor
7. Voltage regulator
8. Alternator
9. Starter
10. Battery
11. Fuse box
12. Temperature gauge, sending unit
13. Oil pressure switch
14. Stop light switch
15. Brake warning contact
16. Heater fan motor
17. Windshield washer pump
18. Wiper motor
19. Charge indicator light
20. Direction indicator repeater light
21. Brake warning light
22. High beam indicator light
23. Oil pressure warning light
24. Electric clock (Extra equipment.)
25. Temperature gauge
26. Speedometer with odometer
27. Fuel gauge
28. Dimmer switch
29. Flasher
30. Control relay for headlight flasher
31. Ignition and starter switch
32. Headlight switch
33. Instrument illumination rheostat
34. Heater fan switch
35. Courtesy light switch
36. Courtesy light with switch
37. Switch for windshield wiper, -washer and signal horn
38. Direction indicator switch with headlight flasher
39. Fuel tank gauge
40. Stop lights and direction indicators
41. Tail lights
42. Number plate light

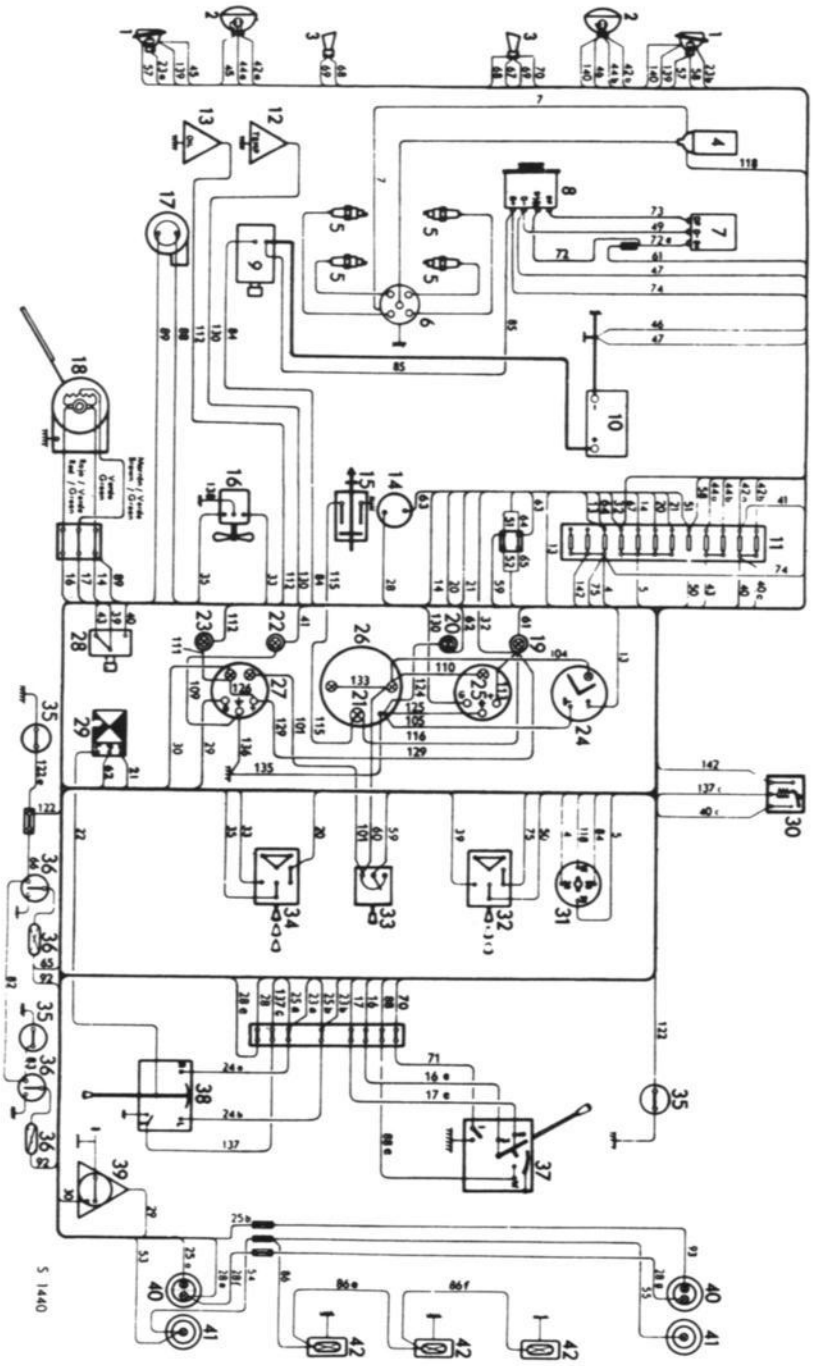

WIRING DIAGRAM SAAB STATION WAGON L.H.D. MODEL 1968

Cable numbers refer to table on opposite page.

Wiring diagram Saab station wagon L.H.D. model 1969

The range of the electrical system is shown by the wiring system on the next page. To simplify the identification, the wires have been covered with insulation of different shades, as follows:

Cable numbers

No.	Color	Area mm2	No.	Color	Area mm2	No.	Color	Area mm2
4	grey	1,5	45	black	1,5	88	black	0,75
5	red	1,5	46	black	2,5	88e	black	0,75
7	black	1,5	47	black	4,0	89	brown	0,75
13	blue	0,75	49	black	1,0	92	red	0,75
14	brown	1,0	50	green	1,0	95	white	1,5
16	grey	1,0	53	blue	0,75	97	white	1,5
16e	grey	1,0	53a	blue	0,75	98	white	1,0
17	blue	1,0	54	green	0,75	101	green	0,75
17e	blue	1,0	54b	green	0,75	104	green	0,75
20	white	1,0	57	blue	0,75	105	black	0,75
21	red	1,0	57a	blue	0,75	109	black	0,75
22	green	1,0	58	green	0,75	110	green	0,75
22e	green	1,0	58b	green	0,75	111	red	0,75
23a	yellow	1,0	59	green	0,75	112	blue	1,0
23ae	yellow	1,0	60	green	0,75	113	white	0,75
23b	white	1,0	61	red	0,75	115	yellow	0,75
23be	white	1,0	62	grey	0,75	116	red	0,75
24a	yellow	0,75	63	red	0,75	118	white	1,0
24ae	yellow	0,75	64	grey	0,75	122	white	0,75
24b	white	0,75	65	red	0,75	124	black	0,75
24be	white	0,75	66	white	0,75	125	black	0,75
25a	blue	1,0	67	red	1,5	126	white	0,75
25b	grey	1,0	68	red	1,0	129	white	0,75
28	red	1,0	69	black	1,0	130	brown	1,0
28e	red	1,0	70	black	1,5	131	white	1,5
28f	red	0,75	71	black	1,5	133	green	0,75
29	grey	0,75	72	red	1,0	135	black	0,75
30	brown	0,75	72e	red	1,0	136	black	0,75
32	red	0,75	73	yellow	1,0	137	brown	0,75
33	yellow	1,0	74	grey	4,0	137c	brown	0,75
35	grey	1,0	75	grey	2,5	138	black	1,0
39	red	2,5	82	white	0,75	139	black	1,5
41	blue	0,75	83	white	0,75	139a	black	1,0
42a	blue	1,5	84	yellow	1,5	139b	black	1,0
42b	white	2,5	85	grey	4,0	140	black	1,5
43	yellow	2,5	86	green	0,75	142	grey	1,5
44a	grey	1,5	86e	green	0,75	144	grey	0,75
44b	yellow	1,5	86f	green	0,75			

KEY TO NUMBERS IN THE FIGURE

1. Parking light and direction indicators
2. Headlights
3. Horn
4. Ignition coil
5. Spark plugs
6. Distributor
7. Voltage regulator
8. Alternator
9. Starter
10. Battery
11. Fuse box
12. Temperature transmitter
13. Oil pressure switch
14. Back-up light switch
15. Stop light switch
16. Brake warning contact
17. Heater fan motor
18. Windshield washer pump
19. Windshield wiper motor
20. Charge indicator light
21. Direction indicator repeater light
22. Brake warning light
23. High beam indicator light
24. Oil pressure warning light
25. Electric clock. (Extra equipment)
26. Temperature gauge (coolant)
27. Speedometer with odometer
28. Fuel gauge
29. Flasher unit
30. Dimmer relay
31. Ignition and starter switch
32. Headlight switch
33. Instrument illumination rheostat
34. Heater fan switch
35. Warning flasher switch
36. Courtesy light switch
37. Courtesy light with switch
38. Switch for windshield wiper, -washer and signal horn
39. Direction indicator switch with headlight flasher and dimmer switch
40. Fuel transmitter
41. Back-up light and direction indicators
42. Tail light and stop light
43. Number plate light

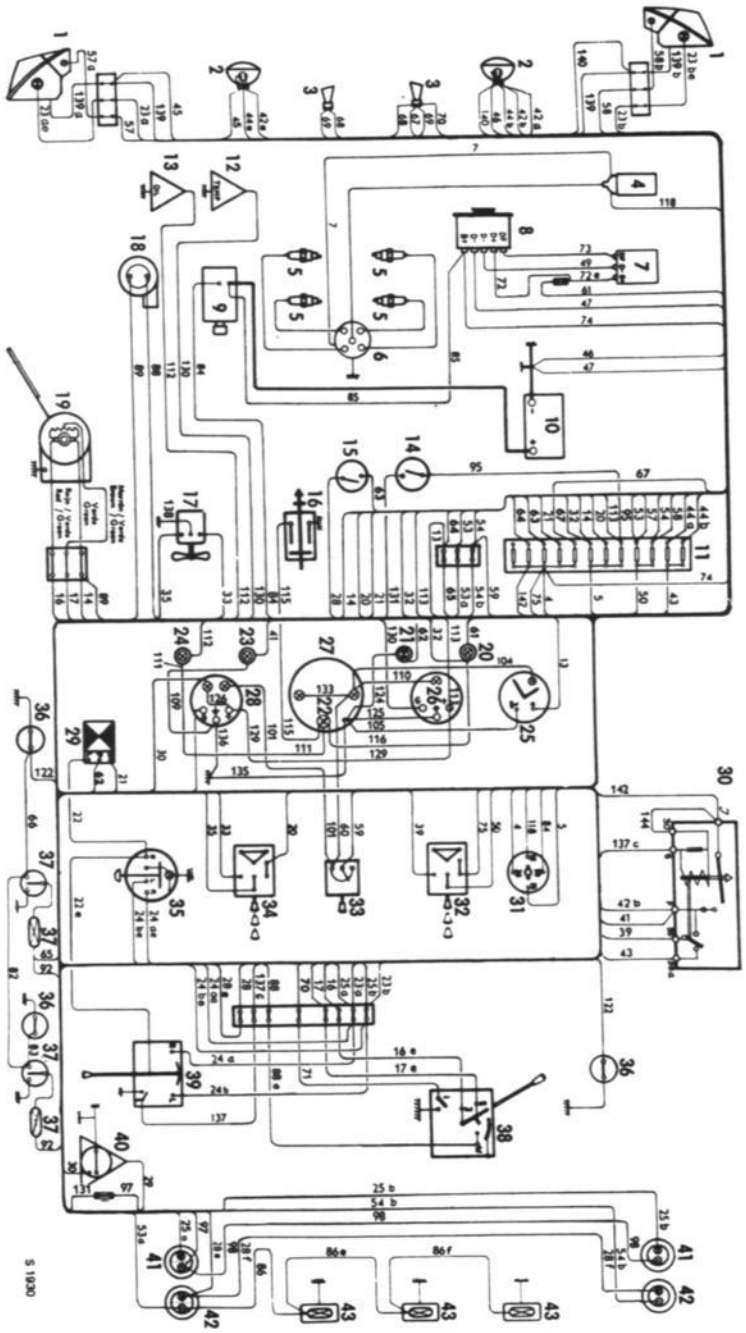

WIRING DIAGRAM SAAB STATION WAGON L.H.D. MODEL 1969

Cable numbers refer to table on opposite page.

Wiring diagram Saab station wagon L.H.D.
Model 1970

The range of the electrical system is shown by the wiring system on the next page. To simplify the identification, the wires have been covered with insulation of different shades, as follows:

Cable numbers

No.	Color	Area mm²	No.	Color	Area mm²	No.	Color	Area mm²
4	grey	1,5	35	grey	1,0	74	grey	4,0
5	red	1,5	39	yellow	0,75	75	red	1,0
7	green	1,5	41	blue	0,75	76	grey	1,0
13	blue	0,75	42a	blue	1,5	82	white	0,75
14	brown	1,0	42b	white	2,5	83	white	0,75
14e	brown	1,0	43	yellow	2,5	84	yellow	1,5
14f	brown	1,0	44a	grey	1,5	85	grey	4,0
15	red	1,0	44b	yellow	1,5	86	green	0,75
15e	red	1,0	45	black	1,5	86e	green	0,75
16	grey	1,0	46	black	2,5	86f	green	0,75
16e	grey	1,0	47	black	4,0	88	black	0,75
17	blue	1,0	49	black	1,0	88e	black	0,75
17e	blue	1,0	50	green	1,0	89	brown	0,75
18	black	1,0	53	blue	0,75	92	red	0,75
20	white	1,0	53a	blue	0,75	95	white	1,5
21	red	1,0	54	green	0,75	97	white	1,5
22	green	1,0	54b	green	0,75	98	white	1,0
22e	green	1,0	57	blue	0,75	101	green	0,75
23a	yellow	1,0	57a	blue	0,75	109	black	0,75
23ae	yellow	1,0	58	green	0,75	110	green	0,75
23b	white	1,0	58b	green	0,75	111	red	0,75
23be	white	1,0	59	green	0,75	112	blue	1,0
24a	yellow	1,0	60	green	0,75	115	yellow	0,75
24ae	yellow	1,0	61	red	0,75	118	white	1,0
24b	white	1,0	62	grey	0,75	122	white	0,75
24be	white	1,0	63	red	1,0	130	brown	1,0
25a	blue	1,0	64	grey	0,75	131	white	1,5
25b	grey	1,0	65	red	0,75	136	black	1,0
28	red	1,0	66	white	0,75	138	black	1,0
28e	red	1,0	67	red	1,5	139	black	1,5
28f	red	0,75	68	red	1,0	139a	black	1,0
29	grey	0,75	69	black	1,0	139b	black	1,0
29e	green	0,75	70	black	1,5	140	black	1,5
30	brown	0,75	71	black	1,5	141	brown	0,75
30e	brown	0,75	72	red	1,0	141e	brown	0,75
32	red	0,75	72e	red	1,0	142	grey	2,5
33	yellow	1,0	73	yellow	1,0	147	black	0,75

Key to numbers in the fig.

1. Parking light and direction indicators
2. Headlights
3. Horn
4. Ignition coil
5. Spark plugs
6. Distributor
7. Voltage regulator
8. Alternator
9. Starter
10. Battery
11. Fuse box
12. Temperature transmitter
13. Oil pressure switch
14. Back-up light switch
15. Stop light switch
16. Brake warning contact
17. Heater fan motor
18. Windshield washer pump
19. Windshield wiper motor
20. Speedometer and odometer
21. High beam indicator light
22. Direction indicator repeater light
23. Brake warning light
24. Temperature and fuel gauges
25. Indicator light, fuel amount
26. Oil pressure warning light
27. Charge indicator light
28. Flasher unit
29. Dimmer relay
30. Ignition and starter switch
31. Hazard warning flasher switch
32. Instrument illumination rheostat
33. Headlight and parking light switch
34. Heater fan switch
35. Courtesy light with switch
37. Switch for windshield wiper, and washer
38. Signal horn contact
39. Direction indicator switch with headlight flasher and dimmer switch
40. Fuel transmitter
41. Back-up light and direction indicators
42. Tail light and stop light
43. Number plate light

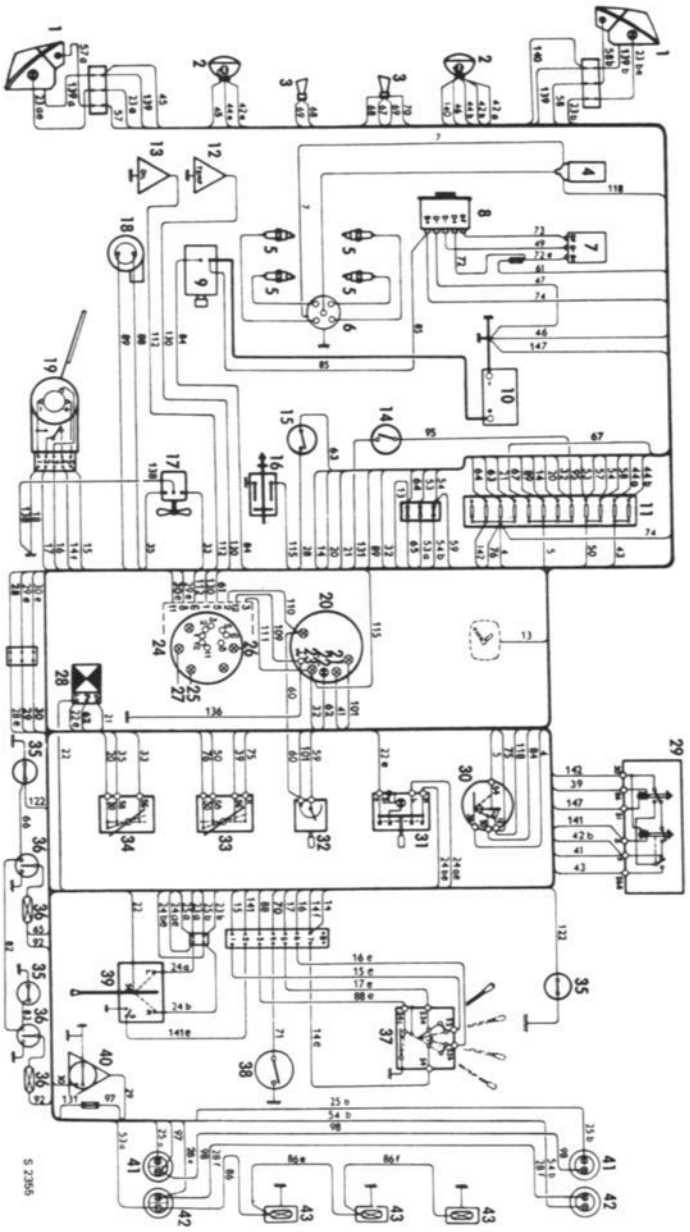

WIRING DIAGRAM SAAB STATION WAGON LH.D. MODEL 1970

Cable numbers refer to table on opposite page.

Wiring diagram Saab station wagon L.H.D. model 1971

The range of the electrical system is shown by the wiring system on the next page. To simplify the identification, the wires have been covered with insulation of different shades, as follows:

Key to numbers in Fig.

1. Parking light and direction indicators
2. Headlights
3. Horn
4. Headlight wiper motor
5. Ignition coil
6. Spark plugs
7. Distributor
8. Voltage regulator
9. Alternator
10. Starter
11. Relay, headlight wiper
12. Fuse for headlight wiper
13. Battery
14. Fuse box
15. Temperature transmitter
16. Oil pressure switch
17. Back-up light switch
18. Stop light switch
19. Brake warning contact
20. Heater fan motor
21. Windshield washer pump
22. Headlight washer pump
23. Windshield wiper motor
24. Manoeuvre relay, headlight wiper
25. Speedometer and odometer
26. High beam indicator light
27. Direction indicator repeater light
28. Brake warning light
29. Temperature and fuel gauges
30. Indicator light, fuel amount
31. Oil pressure warning light
32. Charge indicator light
33. Flasher unit
34. Dimmer relay
35. Ignition and starter switch
36. Hazard warning flasher switch
37. Diode
38. Instrument illumination rheostat
39. Headlight switch
40. Heater fan switch
41. Courtesy light switch
42. Courtesy light with switch
43. Switch for windshield wiper, headlight wiper and washer
44. Signal horn contact
45. Direction indicator switch with headlight flasher and dimmer switch
46. Fuel transmitter
47. Back-up light and direction indicators
48. Tail light and stop light
49. Number plate light

Cable numbers

No.	Color	Area mm²	No.	Color	Area mm²	No.	Color	Area mm²
4	grey	1,5	43	yellow	2,5	82	white	0,75
5	red	1,5	44a	grey	1,5	82	yellow	0,75
7	green	1,5	44b	yellow	1,5	82e	black	0,75
13	blue	0,75	45	black	1,5	83	white	0,75
14	brown	1,0	46	black	2,5	83	black	0,75
14e	brown	1,0	49	black	1,0	83e	black	0,75
14f	brown	1,0	50	green	1,0	84	yellow	1,5
15	red	1,0	53	blue	0,75	85	grey	4,0
15e	red	1,0	53a	blue	0,75	86	green	0,75
16	grey	1,0	54	green	0,75	86e	green	0,75
16e	grey	1,0	54b	green	0,75	86f	green	0,75
17	blue	1,0	57	blue	0,75	88	black	0,75
17e	blue	1,0	57a	blue	0,75	88e	black	0,75
18	black	1,0	58	green	0,75	88f	black	0,75
20	white	1,0	58b	green	0,75	88g	black	0,75
21	red	1,0	59	green	0,75	89	brown	0,75
22	green	1,0	60	green	0,75	89f	yellow	0,75
22e	green	1,0	61	red	0,75	92	red	0,75
23a	yellow	1,0	62	grey	0,75	95	white	1,5
23ae	yellow	1,0	63	red	1,0	97	white	1,5
23b	white	1,0	64	grey	0,75	98	white	1,0
23be	white	1,0	65	red	0,75	101	green	0,75
24a	yellow	1,0	66	white	0,75	109	black	0,75
24ae	yellow	1,0	67	red	1,5	110	green	0,75
24b	white	1,0	68	red	1,0	111	red	0,75
24be	white	1,0	69	black	1,0	112	blue	1,0
25a	blue	1,0	70	black	1,5	115	yellow	0,75
25b	grey	1,0	71	black	1,5	118	white	1,0
28	red	1,0	72	red	1,0	122	white	0,75
28e	red	1,0	72e	red	1,0	130	brown	1,0
28f	red	0,75	73	yellow	1,0	131	white	1,5
29	grey	0,75	74	grey	4,0	136	black	1,0
29e	green	0,75	75	red	1,0	138	black	1,0
30	brown	0,75	76	grey	1,0	139	black	1,5
30e	brown	0,75	77	red	0,75	139a	black	1,0
32	red	0,75	77a	red	0,75	139b	black	1,0
33	yellow	1,0	77e	red	0,75	140	black	1,5
35	grey	1,0	77f	red	0,75	141	brown	0,75
39	yellow	0,75	78	brown	0,75	141e	brown	0,75
41	blue	0,75	79	green	0,75	142	grey	2,5
42a	blue	1,5	81	grey	0,75	147	black	0,75
42b	white	2,5	81e	blue	0,75			

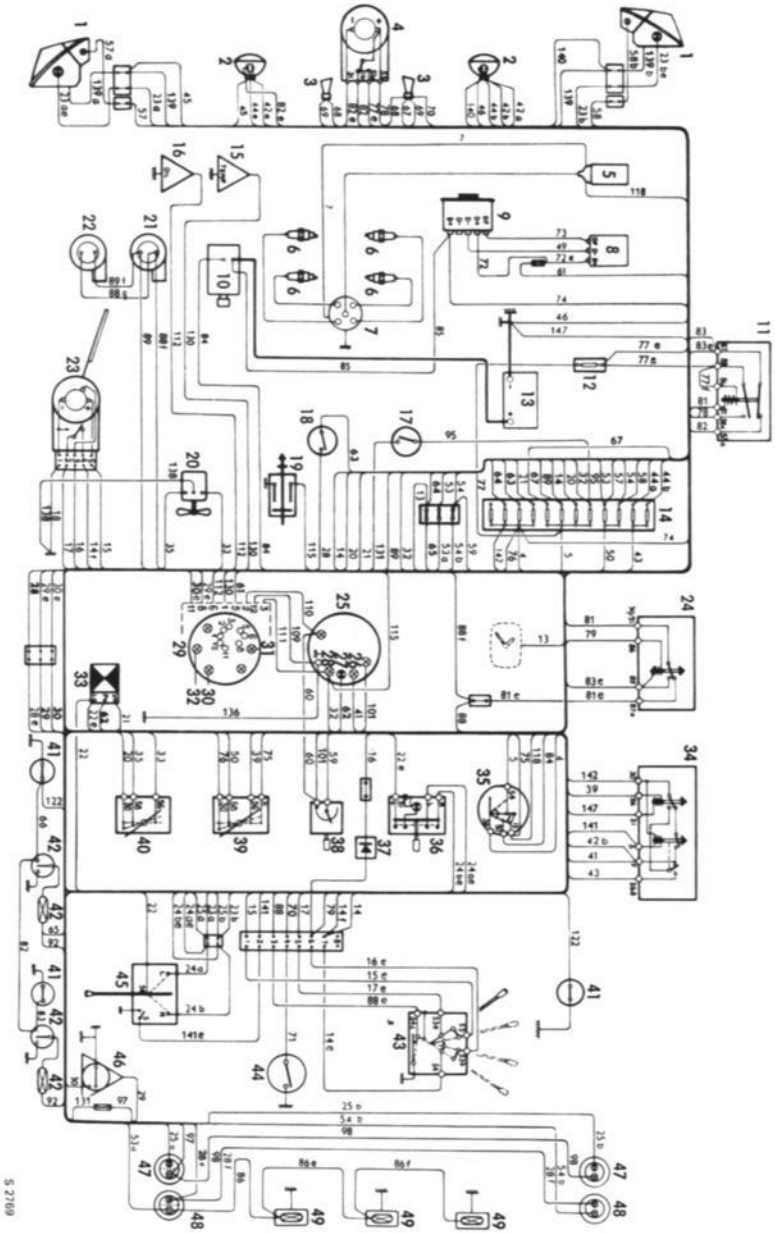

WIRING DIAGRAM SAAB STATION WAGON L.H.D. MODEL 1971

Cable numbers refer to table on opposite page.

Wiring diagram Saab station wagon R.H.D. model 1967

The range of the electrical system is shown by the wiring system on the next page. To simplify the identification, the wires have been covered with insulation of different shades, as follows:

Black	7, 7b, 18, 19, 45, 46, 47, 49, 71, 105, 109, 125, 135, 136, 138, 139, 140.
Red	5, 21, 28, 28e, 28f, 28g, 32, 39, 61, 63, 65, 67, 68, 72, 92, 111, 113, 126, 129.
Green	16, 22, 50, 51, 53, 54, 55, 57, 58, 60, 86, 87, 88, 101, 104, 110, 133, 143.
Grey	4, 25b, 25be, 29, 29e, 35, 44a, 62a, 62b, 64, 69, 70, 74, 75, 85, 93, 142, 144.
White	20, 23b, 24b, 40, 42b, 66, 82, 83, 118, 122, 122e, 128a.
Yellow	17, 23a, 24a, 33, 43, 44b, 73, 84, 128b.
Brown	14, 30, 30e, 130, 137, 141.
Blue	13, 25a, 25ae, 41, 42a, 112, 145.

KEY TO NUMBERS IN THE FIGURE

1. Direction indicator lights and side lights
2. Headlights
3. Horns
4. Ignition coil
5. Spark plugs
6. Distributor
7. Voltage regulator
8. Alternator
9. Starter motor
10. Battery
11. Fuse box
12. Temperature sender
13. Oil pressure switch
14. Stop light switch
15. Heater motor
16. Windshield wiper motor
17. Direction indicator warning lights
18. High beam warning light
19. Generator warning light
20. Oil pressure warning light
21. Fuel gauge
22. Speedometer with odometer
23. Temperature gauge
24. Electric clock
25. Flasher
26. Headlight control relay
27. Dimmer relay
28. Ignition and starter switch
29. Headlight and side light switch with instrument illumination rheostat
30. Heater switch
31. Windshield wiper switch
32. Courtesy light switches
33. Interior light with switch
34. Horn ring
35. Direction indicators switch with headlight flasher and dimmer switch
36. Fuel tank gauge
37. Stop lights and direction lights
38. Rear lights
39. Number plate light

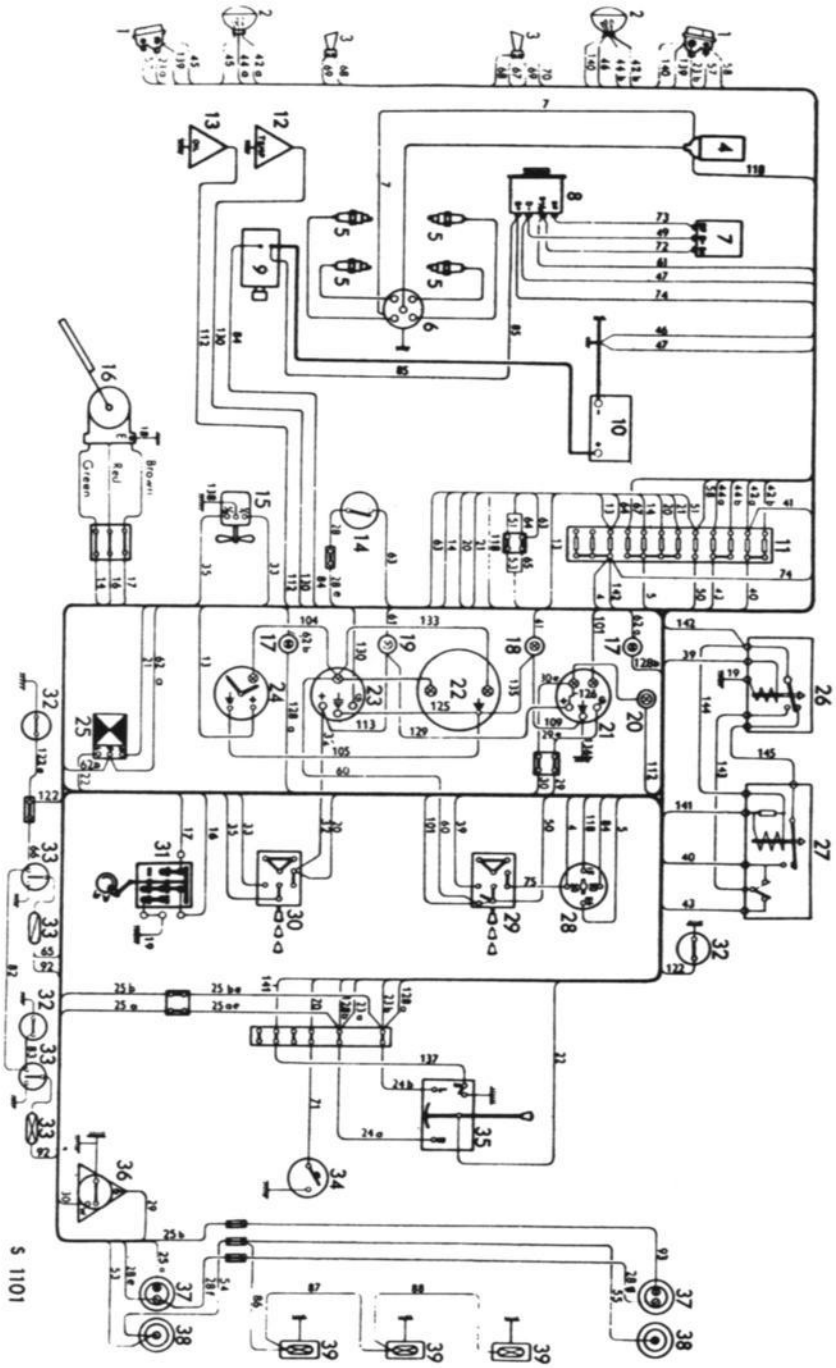

WIRING DIAGRAM SAAB STATION WAGON R.H.D. MODEL 1967

Cable numbers refer to table on opposite page.

Wiring diagram Saab station wagon R.H.D. model 1968

The range of the electrical system is shown by the wiring system on the next page. To simplify the identification, the wires have been covered with insulation of different shades, as follows:

Black 7, 19, 45, 46, 47, 49, 71, 88, 88e, 105, 109, 124, 125, 135, 136, 138, 139, 140.

Red 5, 21, 28, 28e, 28f, 28g, 32, 39, 61, 63, 65, 67, 68, 72, 72e, 92, 111, 113, 116, 126, 129.

Green 22 50, 51, 53, 54, 55, 57, 58, 59, 60, 86, 86e, 86f, 101, 104, 110, 143.

Grey 4, 16, 16e, 25b, 25be, 29, 35, 44a, 62b, 64, 69, 70, 74, 75, 85, 93, 142, 144.

White 20, 23b, 24b, 40, 40c, 42b, 66, 82, 83, 118, 122, 122e.

Yellow 23a, 24a, 33, 43, 44b, 73, 84, 115.

Brown 14, 30, 30e, 89, 130, 137, 141.

Blue 13, 17, 17e, 25a, 15ae, 41, 42a, 112, 145.

KEY TO NUMBERS IN THE FIGURE

1. Direction indicators and side lights
2. Headlights
3. Horn
4. Ignition coil
5. Spark plugs
6. Distributor
7. Voltage regulator
8. Alternator
9. Starter
10. Battery
11. Fuse box
12. Temperature gauge, sending unit
13. Oil pressure switch
14. Stop light switch
15. Brake warning contact
16. Heater fan motor
17. Windshield washer pump
18. Wiper motor
19. Charge indicator light
20. Direction indicator repeater light
21. Brake warning light
22. High beam indicator light
23. Oil pressure warning light
24. Fuel gauge
25. Speedometer with odometer
26. Temperature gauge
27. Electric clock (Extra equipment)
28. Flasher
29. Manoeuvre relay, light
30. Dimmer relay
31. Ignition and starter switch
32. Headlight switch
33. Instrument illumination rheostat
34. Heater fan switch
35. Courtesy light switch
36. Courtesy light with switch
37. Direction indicator switch with headlight flasher and dimmer switch
38. Fuel tank gauge
39. Switch for windshield wiper, -washer and signal horn
40. Stop lights and direction indicators
41. Tail lights
42. Number plate light

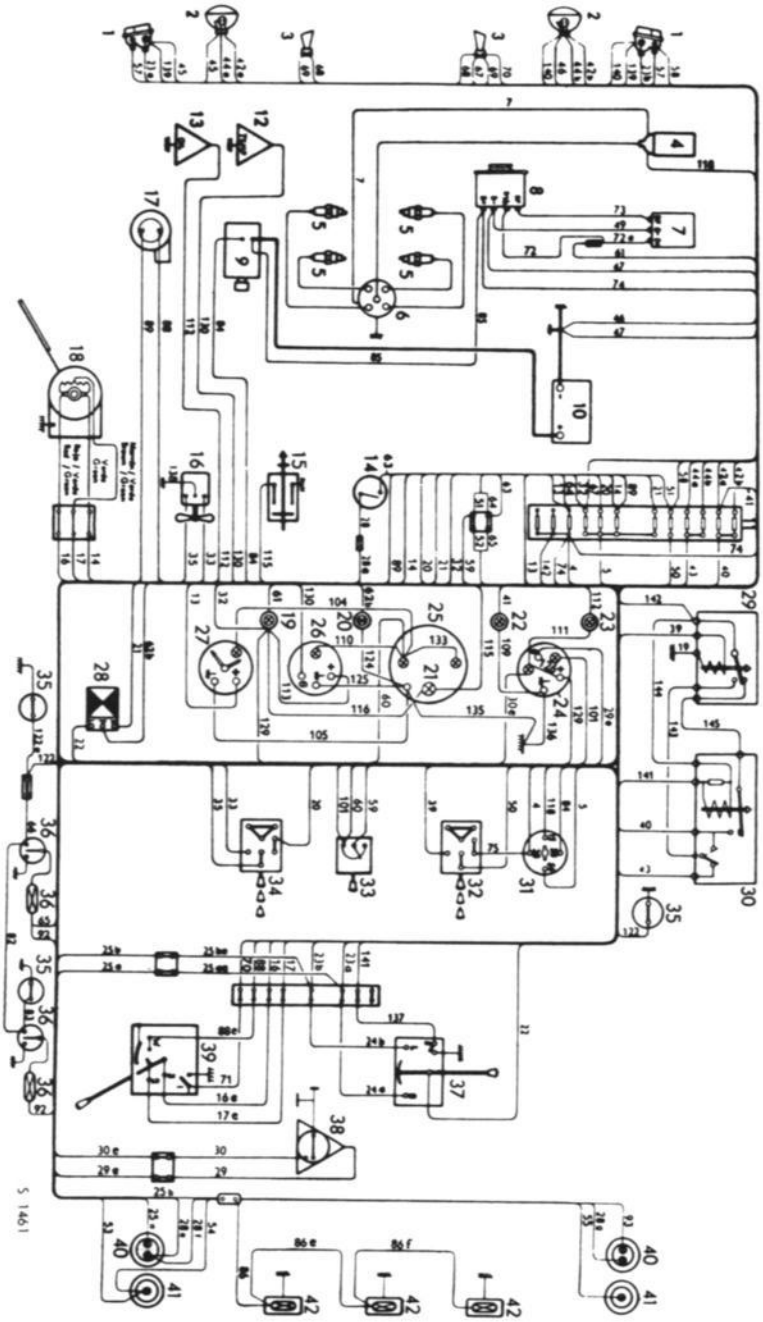

WIRING DIAGRAM SAAB STATION WAGON R.H.D. MODEL 1968

Cable numbers refer to table on opposite page.

Wiring diagram Saab station wagon R.H.D. model 1969

The range of the electrical system is shown by the wiring system on the next page. To simplify the identification, the wires have been covered with insulation of different shades, as follows:

Cable numbers

No.	Color	Area mm2	No.	Color	Area mm2	No.	Color	Area mm2
4	grey	1,5	43	yellow	2,5	86e	green	0,75
5	red	1,5	44a	grey	1,5	86f	green	0,75
7	black	1,5	44b	yellow	1,5	88	black	0,75
13	blue	0,75	45	black	1,5	88e	black	0,75
14	brown	1,0	46	black	2,5	89	brown	0,75
16	grey	1,0	47	black	4,0	92	red	0,75
16e	grey	1,0	49	black	1,0	95	white	1,5
17	blue	1,0	50	green	1,0	97	white	1,5
17e	blue	1,0	53	blue	0,75	98	white	1,0
20	white	1,0	53a	blue	0,75	101	green	0,75
21	red	1,0	54	green	0,75	104	green	0,75
22	green	1,0	54b	green	0,75	105	black	0,75
22e	green	1,0	57	blue	0,75	109	black	0,75
23a	yellow	1,0	57a	blue	0,75	110	green	0,75
23ae	yellow	1,0	58	green	0,75	111	red	0,75
23b	white	1,0	58b	green	0,75	112	blue	1,0
23be	white	1,0	59	green	0,75	113	white	0,75
24a	yellow	0,75	60	green	0,75	115	yellow	0,75
24ae	yellow	0,75	61	red	0,75	116	red	0,75
24b	white	0,75	62	grey	0,75	118	white	1,0
24be	white	0,75	63	red	0,75	122	white	0,75
25a	blue	1,0	64	grey	0,75	124	black	0,75
25ae	blue	1,0	65	red	0,75	125	black	0,75
25b	grey	1,0	66	white	0,75	126	white	0,75
25be	grey	1,0	67	red	1,5	129	white	0,75
28	red	1,0	68	red	1,0	130	brown	1,0
28e	red	1,0	69	black	1,0	131	white	1,5
28f	red	0,75	70	black	1,5	133	green	0,75
29	grey	0,75	71	black	1,5	135	black	0,75
29e	grey	0,75	72	red	1,0	136	black	0,75
30	brown	0,75	72e	red	1,0	137	brown	0,75
30e	brown	0,75	73	yellow	1,0	137c	brown	0,75
32	red	0,75	74	grey	4,0	138	black	1,0
33	yellow	1,0	75	grey	2,5	139	black	1,0
35	grey	1,0	82	white	0,75	139a	black	1,0
39	red	2,5	83	white	0,75	139b	black	1,0
41	blue	0,75	84	yellow	1,5	140	black	1,5
42a	blue	1,5	85	grey	4,0	142	grey	1,5
42b	white	2,5	86	green	0,75	144	grey	0,75

KEY TO NUMBERS IN THE FIGURE

1. Parking light and direction indicators
2. Headlights
3. Horn
4. Ignition coil
5. Spark plugs
6. Distributor
7. Voltage regulator
8. Alternator
9. Starter
10. Battery
11. Fuse box
12. Temperature transmitter
13. Oil pressure switch
14. Stop light switch
15. Back-up light switch
16. Brake warning contact
17. Heater fan motor
18. Windshield washer pump
19. Windshield wiper motor
20. Charge indicator light
21. Direction indicator repeater light
22. Brake warning light
23. High beam indicator light
24. Oil pressure warning light
25. Fuel gauge
26. Speedometer and odometer
27. Temperature gauge (coolant)
28. Electric clock (De Luxe only)
29. Flasher unit
30. Dimmer relay
31. Ignition and starter switch
32. Headlight switch
33. Instrument illumination rheostat
34. Heater fan switch
35. Warning flasher switch
36. Courtesy light switch
37. Courtesy light with switch
38. Direction indicator switch with headlight flasher and dimmer switch
39. Fuel transmitter
40. Switch for windshield wiper, -washer and signal horn
41. Back-up light and direction indicators
42. Tail light and stop light
43. Number plate light

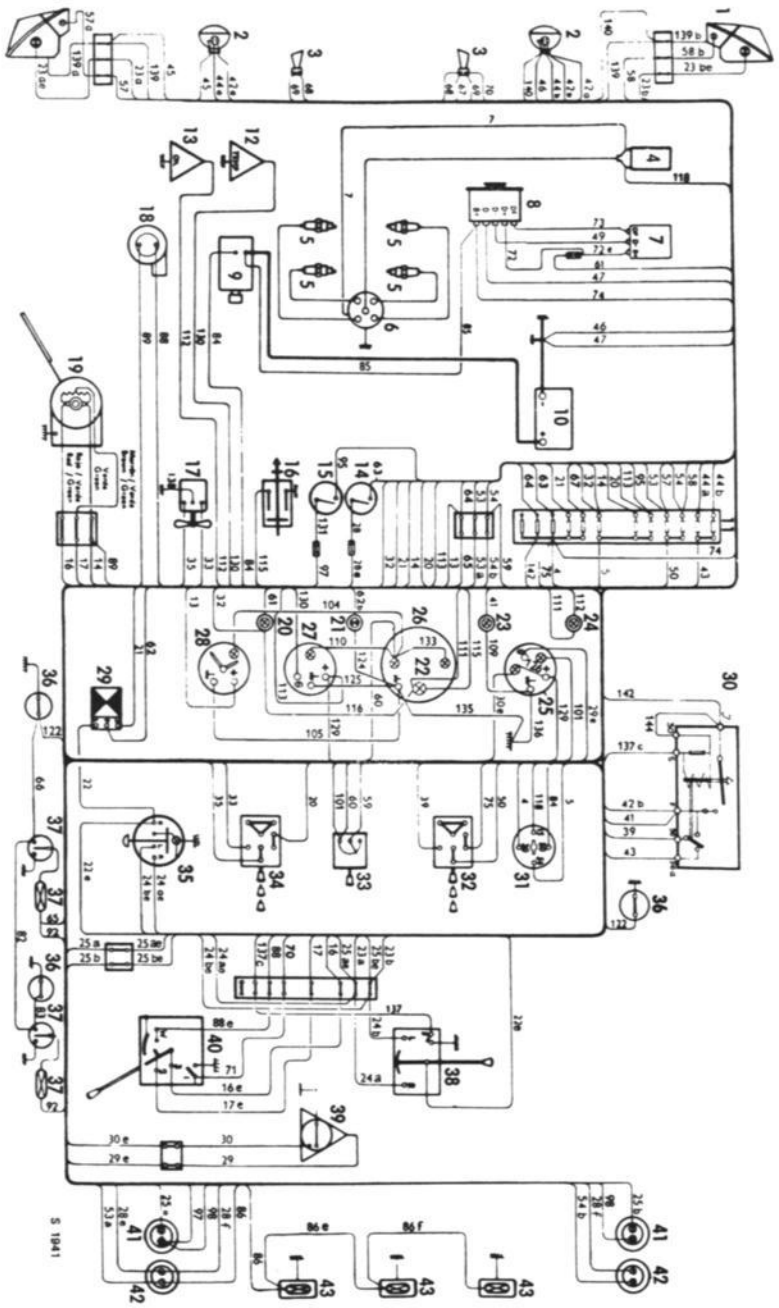

WIRING DIAGRAM SAAB STATION WAGON R.H.D. MODEL 1969

Cable numbers refer to table on opposite page.

Wiring diagram Saab station wagon R.H.D. model 1970

The range of the electrical system is shown by the wiring system on the next page. To simplify the identification, the wires have been covered with insulation of different shades, as follows:

Cable numbers

No.	Color	Area mm^2	No.	Color	Area mm^2	No.	Color	Area mm^2
4	grey	1,5	32	red	0,75	74	grey	4,0
5	red	1,5	33	yellow	1,0	75	red	1,0
7	green	1,5	35	grey	1,0	76	grey	1,0
13	blue	0,75	39	yellow	0,75	82	white	0,75
14	brown	1,0	41	blue	0,75	83	white	0,75
14e	brown	1,0	42a	blue	1,5	84	yellow	1,5
14f	brown	1,0	42b	white	2,5	85	grey	4,0
15	red	1,0	43	yellow	2,5	86	green	0,75
15e	red	1,0	44a	grey	1,5	86e	green	0,75
16	grey	1,0	44b	yellow	1,5	86f	green	0,75
16e	grey	1,0	45	black	1,5	88	black	0,75
17	blue	1,0	46	black	2,5	88e	black	0,75
17e	blue	1,0	47	black	4,0	89	brown	0,75
18	black	1,0	49	black	1,0	92	red	0,75
20	white	1,0	50	green	1,0	95	white	1,5
21	red	1,0	53	blue	0,75	97	white	1,5
22	green	1,0	53a	blue	0,75	98	white	1,0
22e	green	1,0	54	green	0,75	101	green	0,75
23a	yellow	1,0	54b	green	0,75	109	black	0,75
23ae	yellow	1,0	57	blue	0,75	110	green	0,75
23b	white	1,0	57a	blue	0,75	111	red	0,75
23be	white	1,0	58	green	0,75	112	blue	1,0
24a	yellow	1,0	58b	green	0,75	115	yellow	0,75
24ae	yellow	1,0	59	green	0,75	118	white	1,0
24b	white	1,0	60	green	0,75	122	white	0,75
24be	white	1,0	61	red	0,75	130	brown	1,0
25a	blue	1,0	62	grey	0,75	131	white	1,5
25ae	blue	1,0	63	red	1,0	136	black	1,0
25b	grey	1,0	64	grey	0,75	138	black	1,0
25be	grey	1,0	65	red	0,75	139	black	1,5
28	red	1,0	66	white	0,75	139a	black	1,0
28e	red	1,0	67	red	1,5	139b	black	1,0
28f	red	0,75	68	red	1,0	140	black	1,5
29	grey	0,75	69	black	1,0	141	brown	0,75
29e	green	0,75	70	black	1,5	141e	brown	0,75
29f	grey	0,75	71	black	1,5	142	grey	2,5
30	brown	0,75	72	red	1,0	147	black	0,75
30e	brown	0,75	72e	red	1,0			
30f	brown	0,75	73	yellow	1,0			

KEY TO NUMBERS IN THE FIGURE

1. Parking light and direction indicators
2. Headlights
3. Horn
4. Ignition coil
5. Spark plugs
6. Distributor
7. Voltage regulator
8. Alternator
9. Starter
10. Battery
11. Fuse box
12. Temperature transmitter
13. Oil pressure switch
14. Back-up light switch
15. Stop light switch
16. Brake warning contact
17. Heater fan motor
18. Windshield washer pump
19. Windshield wiper motor
20. Speedometer and odometer
21. High beam indicator light
22. Direction indicator repeater light
23. Brake warning light
24. Temperature and fuel gauges
25. Indicator light, fuel amount
26. Oil pressure warning light
27. Charge indicator light
28. Flasher unit
29. Dimmer relay
30. Ignition and starter switch
31. Hazard warning flasher switch
32. Instrument illumination rheostat
33. Headlight switch
34. Heater fan switch
35. Courtesy light switch
36. Courtesy light with switch
37. Switch for windshield wiper, and washer
38. Signal horn contact
39. Direction indicator switch with headlight flasher and dimmer switch
40. Fuel transmitter
41. Back-up light and direction indicators
42. Tail light and stop light
43. Number plate light

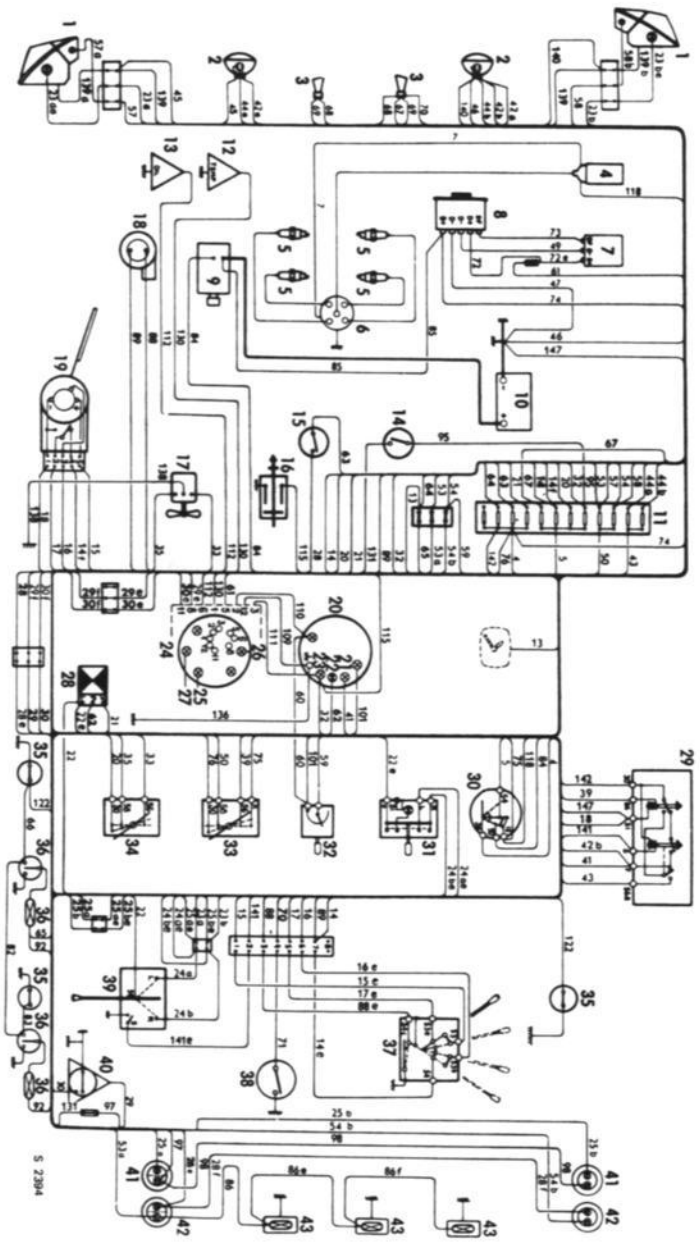

WIRING DIAGRAM SAAB STATION WAGON R.H.D. MODEL 1970

Cable numbers refer to table on opposite page.

Wiring diagram Saab station wagon R.H.D. model 1971

The range of the electrical system is shown by the wiring system on the next page. To simplify the identification, the wires have been covered with insulation of different shades, as follows:

Cable numbers

No.	Color	Area mm²	No.	Color	Area mm²	No.	Color	Area mm²
4	Grey	1,5	41	Blue	0,75	81	Grey	0,75
5	Red	1,5	42a	Blue	1,5	81e	Blue	0,75
7	Green	1,5	42b	White	2,5	82	White	0,75
13	Blue	0,75	43	Yellow	2,5	82	Yellow	0,75
14	Brown	1,0	44a	Grey	1,5	82e	Black	0,75
14e	Brown	1,0	44b	Yellow	1,5	83	White	0,75
14f	Brown	1,0	45	Black	1,5	83	Black	0,75
15	Red	1,0	46	Black	2,5	83e	Black	0,75
15e	Red	1,0	49	Black	1,0	84	Yellow	1,5
16	Grey	1,0	50	Green	1,0	85	Grey	4,0
16e	Grey	1,0	53	Blue	0,75	86	Green	0,75
17	Blue	1,0	53a	Blue	0,75	86e	Green	0,75
17e	Blue	1,0	54	Green	0,75	86f	Green	0,75
18	Black	1,0	54b	Green	0,75	88	Black	0,75
20	White	1,0	57	Blue	0,75	88e	Black	0,75
21	Red	1,0	57a	Blue	0,75	88f	Black	0,75
22	Green	1,0	58	Green	0,75	88g	Black	0,75
22e	Green	1,0	58b	Green	0,75	89	Brown	0,75
23a	Yellow	1,0	59	Green	0,75	89f	Yellow	0,75
23ae	Yellow	1,0	60	Green	0,75	92	Red	0,75
23b	White	1,0	61	Red	0,75	95	White	1,5
23be	White	1,0	62	Grey	0,75	97	White	1,5
24a	Yellow	1,0	63	Red	1,0	98	White	1,0
24ae	Yellow	1,0	64	Grey	0,75	101	Green	0,75
24b	White	1,0	65	Red	0,75	109	Black	0,75
24be	White	1,0	66	White	0,75	110	Green	0,75
25a	Blue	1,0	67	Red	1,5	111	Red	0,75
25ae	Blue	1,0	68	Red	1,0	112	Blue	1,0
25b	Grey	1,0	69	Black	1,0	115	Yellow	0,75
25be	Grey	1,0	70	Black	1,5	118	White	1,0
28	Red	1,0	71	Black	1,5	122	White	0,75
28e	Red	1,0	72	Red	1,0	130	Brown	0,75
28f	Red	0,75	72e	Red	1,0	131	White	1,5
29	Grey	0,75	73	Yellow	1,0	136	Black	1,0
29e	Grey	0,75	74	Grey	4,0	138	Black	1,0
29f	Grey	0,75	75	Red	1,0	139	Black	1,5
30	Brown	0,75	76	Grey	1,0	139a	Black	1,0
30e	Brown	0,75	77	Red	0,75	139b	Black	1,0
30f	Brown	0,75	77a	Red	0,75	140	Black	1,5
32	Red	0,75	77e	Red	0,75	141	Brown	0,75
33	Yellow	1,0	77f	Red	0,75	141e	Brown	0,75
35	Grey	1,0	78	Brown	0,75	142	Grey	2,5
39	Yellow	0,75	79	Green	0,75	147	Black	0,75

Key to numbers in Fig.

1. Parking light and direction indicators
2. Headlights
3. Horn
4. Headlight wiper motor
5. Ignition coil
6. Spark plugs
7. Distributor
8. Voltage regulator
9. Alternator
10. Starter
11. Relay, headlight wiper
12. Fuse for headlight wiper
13. Battery
14. Fuse box
15. Temperature transmitter
16. Oil pressure switch
17. Back-up light switch
18. Stop light switch
19. Brake warning contact
20. Heater fan motor
21. Windshield washer pump
22. Headlight washer pump
23. Windshield wiper motor
24. Manoeuvre relay, headlight wiper
25. Speedometer and odometer
26. High beam indicator light
27. Direction indicator repeater light
28. Brake warning light
29. Temperature and fuel gauges
30. Indicator light, fuel amount
31. Oil pressure warning light
32. Charge indicator light
33. Flasher unit
34. Dimmer relay
35. Ignition and starter switch
36. Hazard warning flasher switch
37. Diode
38. Instrument illumination rheostat
39. Headlight switch
40. Heater fan switch
41. Courtesy light switch
42. Courtesy light with switch
43. Switch for windshield wiper, headlight wiper and washer
44. Signal horn contact
45. Direction indicator switch with headlight flasher and dimmer switch
46. Fuel transmitter
47. Back-up light and direction indicators
48. Tail light and stop light
49. Number plate light

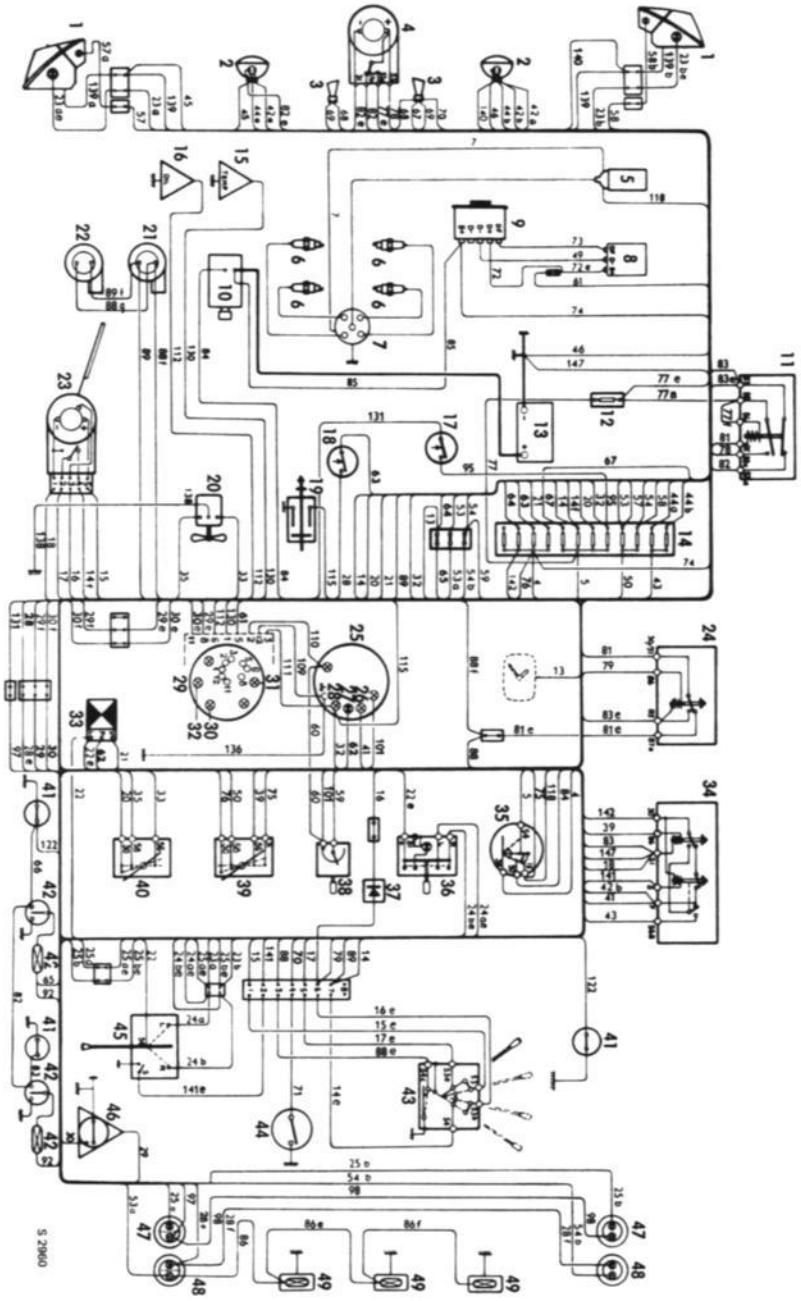

WIRING DIAGRAM SAAB STATION WAGON R.H.D. MODEL 1971

Cable numbers refer to table on opposite page.

Wiring diagram Saab station wagon USA model 1967

The range of the electrical system is shown by the wiring system on the next page. To simplify the identification, the wires have been covered with insulation of different shades, as follows:

Black	7, 18, 19, 45, 46, 47, 49, 71, 80, 105, 109, 125, 135, 136, 138, 139, 140.
Red	5, 21, 28, 28e, 28f, 28g, 32, 39, 61, 63, 65, 67, 68, 72, 92, 111, 113, 126, 129.
Green	16, 22, 22e, 22f, 50, 51, 53, 54, 55, 57, 58, 60, 86, 87, 88, 101, 104, 110, 133.
Grey	4, 25b, 29, 35, 44a, 62a, 62b, 64, 69, 70, 74, 75, 85, 93.
White	20, 23b, 24b, 24be, 24bf, 40, 42b, 66, 82, 83, 118, 122, 122e, 128a.
Yellow	17, 23a, 24a, 24ae, 24af, 33, 43, 44b, 73, 84, 128b.
Brown	14, 30, 130, 137.
Blue	13, 25a, 41, 42a, 112.

KEY TO NUMBERS IN THE FIGURE

1. Parking and direction indicator lights
2. Headlights
3. Horns
4. Ignition coil
5. Spark plugs
6. Distributor
7. Voltage regulator
8. Alternator
9. Starter motor
10. Battery
11. Fuse box
12. Temperature gauge sending unit
13. Oil pressure switch
14. Stop light switch
15. Heater motor
16. Windshield wiper motor
17. Direction indicator warning lights
18. Charge indicator light
19. High beam indicator light
20. Oil pressure warning light
21. Electric clock
22. Temperature gauge
23. Speedometer with odometer
24. Fuel gauge
25. Foot dimmer switch
26. Flasher
27. Cigarette lighter
28. Ignition and starter switch
29. Headlight and parking light switch with instrument illumination rheostat
30. Warning flasher switch with control light
31. Heater switch
32. Windshield wiper switch
33. Automatic door switch for dome light
34. Dome light with switch
35. Horn ring
36. Direction indicator switch
37. Fuel tank sending unit
38. Stop light and direction indicator light
39. Tail lights
40. License lights

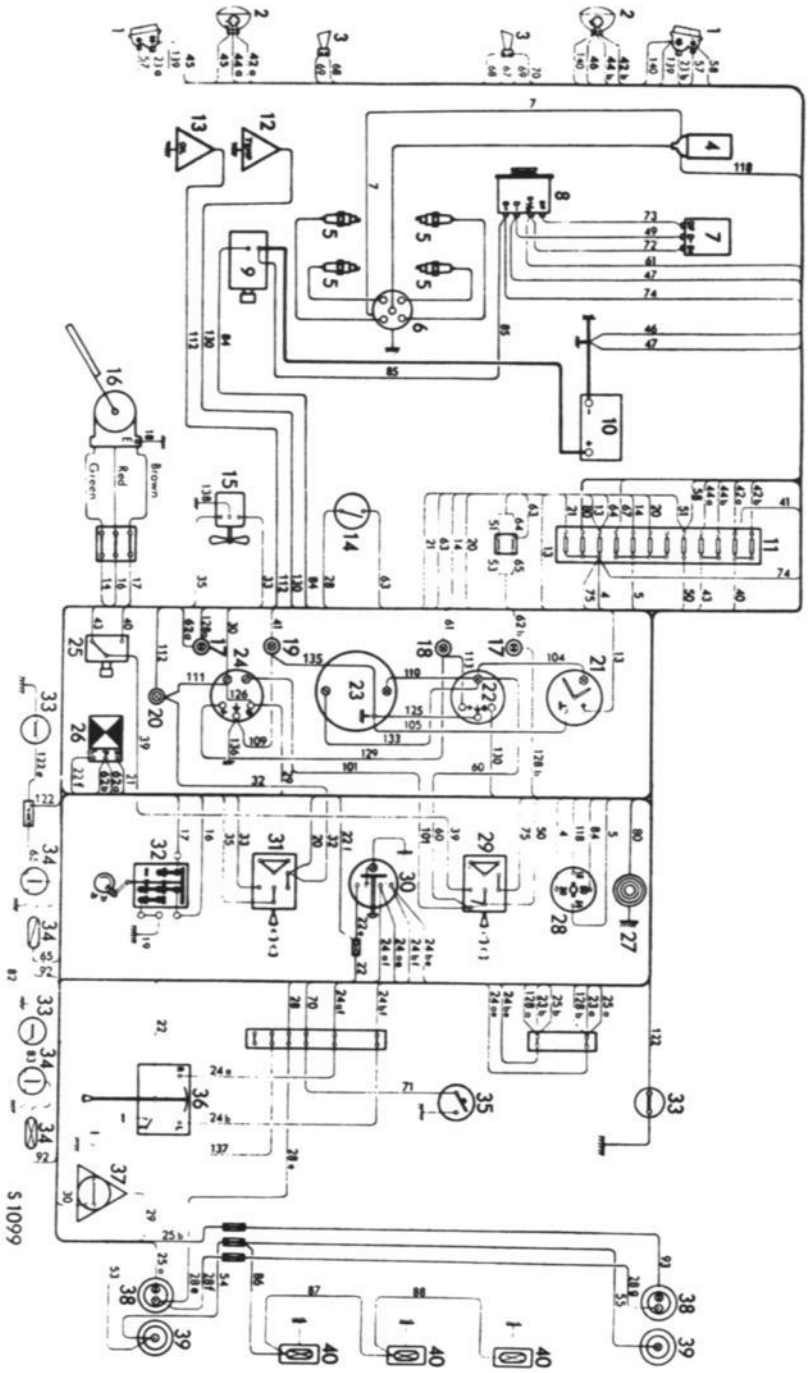

WIRING DIAGRAM STATION WAGON USA MODEL 1967

Cable numbers refer to table on opposite page.

Wiring diagram Saab station wagon USA model 1968

The range of the electrical system is shown by the wiring system on the next page. To simplify the identification, the wires have been covered with insulation of different shades, as follows:

Black 7, 45, 46, 47, 49, 69, 70, 88, 88e, 109, 124, 125, 135, 136, 138. 139. 140.

Red 5, 21, 28, 28e, 28f, 28g, 32, 39, 61, 63, 65, 67, 68, 72, 72e, 92, 111, 113. 116, 126. 129.

Green 22, 22e, 22f, 50, 51, 53, 54, 55, 57, 58, 59, 60, 86, 86e, 86f. 101, 110.

Grey 4, 16, 16e, 25b, 29, 35, 44a, 62, 64, 74, 75, 85, 93.

White 20, 23b, 24b, 24be, 24bf, 40, 40c, 42b, 66, 82, 83, 95. 97. 97ae, 93, 118, 112, 122e, 131.

Yellow 23a, 24a, 24ae, 24af, 33, 43, 44b, 73, 84, 115.

Brown 14, 15, 30, 89, 130, 137.

Blue 17, 17e, 25a, 41, 42a, 112.

KEY TO NUMBERS IN THE FIGURE

1. Direction indicators and side lights
2. Headlights
3. Horn
4. Ignition coil
5. Spark plugs
6. Distributor
7. Voltage regulator
8. Alternator
9. Starter
10. Battery
11. Fuse box
12. Temperature gauge, sending unit
13. Oil pressure swith
14. Back-up light switch
15. Stop light switch
16. Brake warning contact
17. Heater fan motor
18. Windshield washer pump
19. Wiper motor
20. Charge indicator light
21. Direction indicator repeater light
22. Brake warning light
23. High beam indicator light
24. Oil pressure warning light
25. Temperature gauge
26. Speedometer with odometer
27. Fuel gauge
28. Dimmer switch
29. Flasher
30. Ignition and starter switch
31. Headlight switch
32. Instrument illumination rheostat
33. Heater fan switch
34. Warning flasher switch
35. Courtesy light switch
36. Courtesy light with switch
37. Switch for windshield wiper, -washer and signal horn
38. Direction indicator switch with headlight flasher
39. Fuel tank gauge
40. Stop lights and direction indicators
41. Tail lights
42. Back-up lights
43. Number plate light

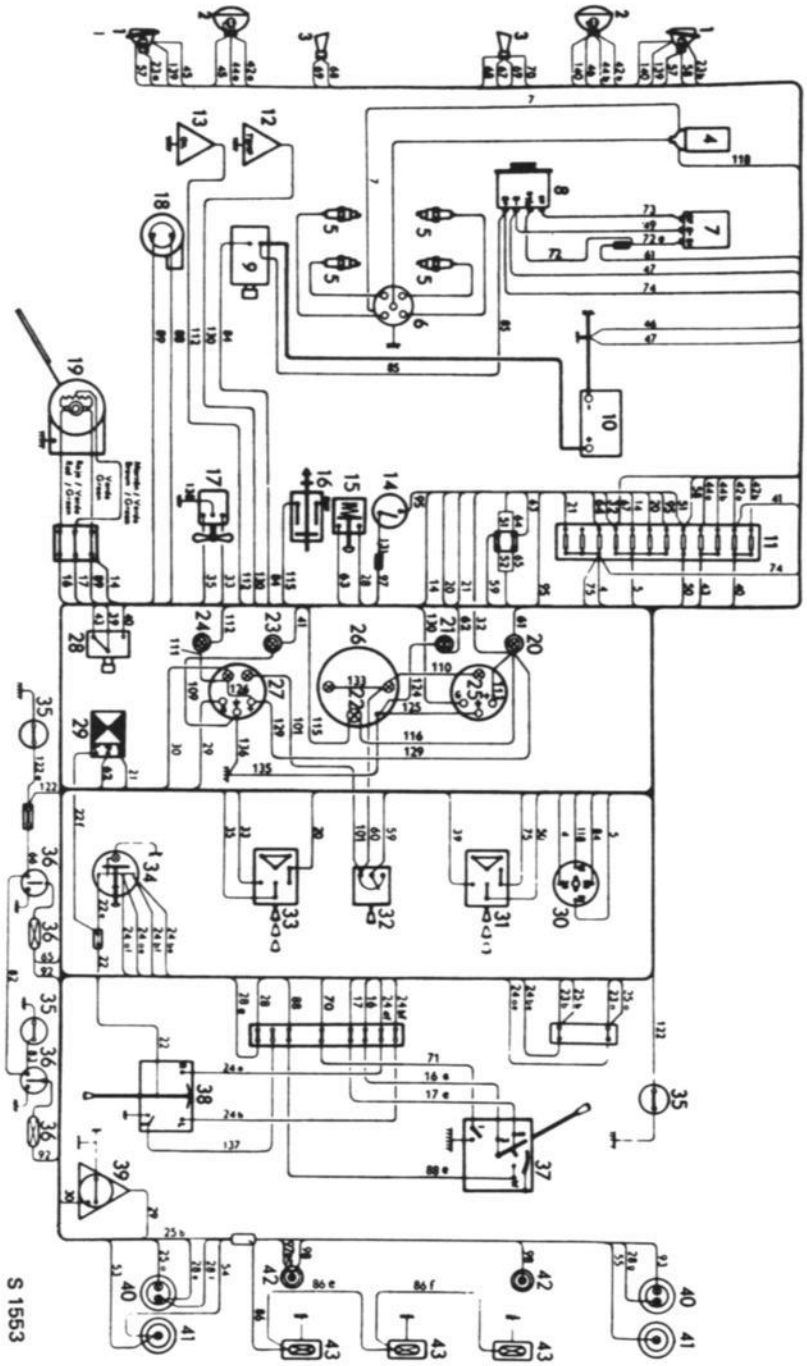

WIRING DIAGRAM STATION WAGON USA MODEL 1968

Cable numbers refer to table on opposite page.

Wiring diagram Saab station wagon USA model 1969

The range of the electrical system is shown by the wiring system on the next page. To simplify the identification, the wires have been covered with insulation of different shades, as follows:

Cable numbers

No.	Color	Area mm2	No.	Color	Area mm2	No.	Color	Area mm2
4	grey	1,5	46	black	2,5	88	black	0,75
5	red	1,5	47	black	4,0	88e	black	0,75
7	black	1,5	49	black	1,0	89	brown	0,75
13	blue	0,75	50	green	1,0	92	red	0,75
14	brown	1,0	53	blue	0,75	95	white	1,5
16	grey	1,0	53a	blue	0,75	97	white	1,5
16e	grey	1,0	53e	green	0,75	98	white	1,0
17	blue	1,0	54	green	0,75	101	green	0,75
17e	blue	1,0	54b	green	0,75	104	green	0,75
20	white	1,0	54e	green	0,75	105	black	0,75
21	red	1,0	57	blue	0,75	109	black	0,75
22	green	1,0	57a	blue	0,75	110	green	0,75
22e	green	1,0	58	green	0,75	111	red	0,75
23a	yellow	1,0	58b	green	0,75	112	blue	1,0
23ae	yellow	1,0	59	green	0,75	113	white	0,75
23b	white	1,0	60	green	0,75	115	yellow	0,75
23be	white	1,0	61	red	0,75	116	red	0,75
24a	yellow	0,75	62	grey	0,75	118	white	1,0
24ae	yellow	0,75	63	red	0,75	122	white	0,75
24b	white	0,75	64	grey	0,75	124	black	0,75
24be	white	0,75	65	red	0,75	125	black	0,75
25a	blue	1,0	66	white	0,75	126	white	0,75
25b	grey	1,0	67	red	1,5	129	white	0,75
28	red	1,0	68	red	1,0	130	brown	1,0
28e	red	1,0	69	black	1,0	131	white	1,5
28f	red	0,75	70	black	1,5	133	green	0,75
29	grey	0,75	71	black	1,5	135	black	0,75
30	brown	0,75	72	red	1,0	136	black	0,75
32	red	0,75	72e	red	1,0	137	brown	0,75
33	yellow	1,0	73	yellow	1,0	137c	brown	0,75
35	grey	1,0	74	grey	4,0	138	black	1,0
39	red	2,5	75	grey	2,5	139	black	1,0
41	blue	0,75	82	white	0,75	139a	black	1,0
42a	blue	1,5	83	white	0,75	139b	black	1,0
42b	white	2,5	84	yellow	1,5	140	black	1,5
43	yellow	2,5	85	grey	4,0	142	grey	1,5
44a	grey	1,5	86	green	0,75	144	grey	0,75
44b	yellow	1,5	86e	green	0,75			
45	black	1,5	86f	green	0,75			

KEY TO NUMBERS IN THE FIGURE

1. Parking light and direction indicators
2. Headlights
3. Horn
4. Ignition coil
5. Spark plugs
6. Distributor
7. Voltage regulator
8. Alternator
9. Starter
10. Battery
11. Fuse box
12. Temperature transmitter
13. Oil pressure switch
14. Back-up light switch
15. Stop light switch
16. Brake warning contact
17. Heater fan motor
18. Windshield washer pump
19. Windshield wiper motor
20. Charge indicator light
21. Direction indicator repeater light
22. Brake warning light
23. High beam indicator light
24. Oil pressure warning light
25. Electric clock (Extra equipment)
26. Temperature gauge
27. Speedometer and odometer
28. Fuel gauge
29. Flasher unit
30. Dimmer relay
31. Ignition and starter switch
32. Headlight switch
33. Instrument illumination rheostat
34. Heater fan switch
35. Warning flasher switch
36. Courtesy light switch
37. Courtesy light with switch
38. Switch for windshield wiper, -washer and signal horn
39. Direction indicator switch with headlight flasher and dimmer switch
40. Fuel transmitter
41. Back-up light and direction indicators
42. Tail light and stop light
43. Number plate light

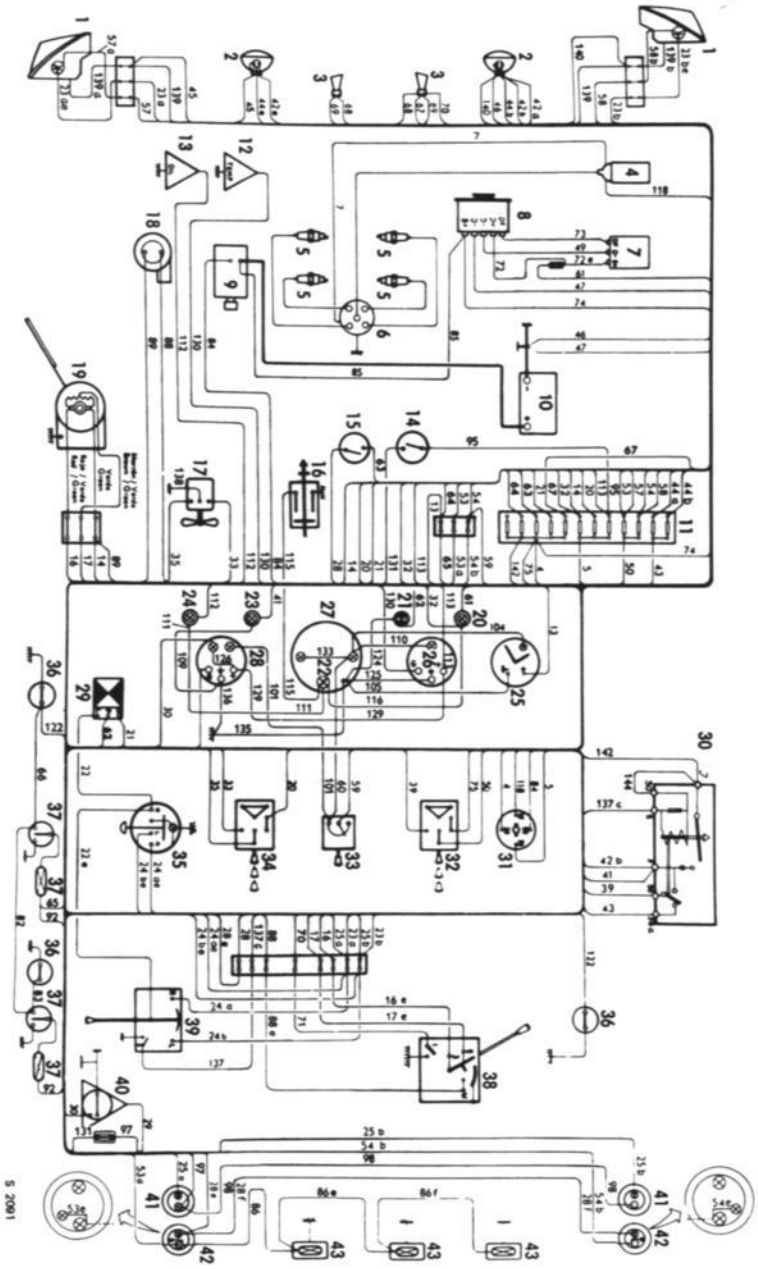

WIRING DIAGRAM STATION WAGON USA MODEL 1969

Cable numbers refer to table on opposite page.

Wiring diagram Saab station wagon USA Model 1970

The range of the electrical system is shown by the wiring system on the next page. To simplify the identification, the wires have been covered with insulation of different shades, as follows:

Cable numbers

No.	Color	Area mm²	No.	Color	Area mm²	No.	Color	Area mm²
4	grey	1,5	42a	blue	1,5	82	white	0,75
5	red	1,5	42b	white	2,5	83	white	0,75
7	green	1,5	43	yellow	2,5	84	yellow	1,5
13	blue	0,75	44a	grey	1,5	85	grey	4,0
14	brown	1,0	44b	yellow	1,5	86	green	0,75
14e	brown	1,0	45	black	1,5	86e	green	0,75
14f	brown	1,0	46	black	2,5	86f	green	0,75
15	red	1,0	47	black	4,0	88	black	0,75
15e	red	1,0	49	black	1,0	88e	black	0,75
16	grey	1,0	50	green	1,0	89	brown	0,75
16e	grey	1,0	53	blue	0,75	92	red	0,75
17	blue	1,0	53a	blue	0,75	95	white	1,5
17e	blue	1,0	53e	green	0,75	97	white	1,5
18	black	1,0	54	green	0,75	98	white	1,0
20	white	1,0	54b	green	0,75	101	green	0,75
21	red	1,0	54e	green	0,75	104	green	0,75
22	green	1,0	57	blue	0,75	105	black	0,75
22e	green	1,0	57a	blue	0,75	109	black	0,75
23a	yellow	1,0	58	green	0,75	110	green	0,75
23ae	yellow	1,0	58b	green	0,75	111	red	0,75
23b	white	1,0	59	green	0,75	112	blue	1,0
23be	white	1,0	60	green	0,75	115	yellow	0,75
24a	yellow	1,0	61	red	0,75	118	white	1,0
24ae	yellow	1,0	62	grey	0,75	122	white	0,75
24b	white	1,0	63	red	1,0	130	brown	1,0
24be	white	1,0	64	grey	0,75	131	white	1,5
25a	blue	1,0	65	red	0,75	136	black	1,0
25b	grey	1,0	66	white	0,75	138	black	1,0
28	red	1,0	67	red	1,5	139	black	1,5
28e	red	1,0	68	red	1,0	139a	black	1,0
28f	red	0,75	69	black	1,0	139b	black	1,0
29	grey	0,75	70	black	1,5	140	black	1,5
29e	green	0,75	71	black	1,5	141	brown	0,75
30	brown	0,75	72	red	1,0	141e	brown	0,75
30e	brown	0,75	72e	red	1,0	142	grey	2,5
32	red	0,75	73	yellow	1,0	147	black	0,75
33	yellow	1,0	74	grey	4,0	190	yellow	0,75
35	grey	1,0	75	red	1,0	191	grey	0,75
39	yellow	0,75	76	grey	1,0	192	black	0,75
41	blue	0,75	80	black	1,0			

KEY TO NUMBERS IN THE FIGURE

1. Parking light and direction indicators
2. Headlights
3. Horn
4. Ignition coil
5. Spark plugs
6. Distributor
7. Voltage regulator
8. Alternator
9. Starter
10. Battery
11. Fuse box
12. Temperature transmitter
13. Oil pressure switch
14. Back-up light switch
15. Stop light switch
16. Brake warning contact
17. Heater fan motor
18. Windshield washer pump
19. Windshield wiper motor
20. Cigarette lighter
21. Contact for warning buzzer
22. Buzzer
23. Clock
24. Speedometer and odometer
25. High beam indicator light
26. Direction indicator repeater light
27. Brake warning light
28. Temperature and fuel gauges
29. Indicator light, fuel amount
30. Oil pressure warning light
31. Charge indicator light
32. Flasher unit
33. Dimmer relay
34. Ignition and starter switch
35. Hazard warning flasher switch
36. Instrument illumination rheostat
37. Headlight switch
38. Heater fan switch
39. Dome lamp switch
40. Dome lamp with switch
41. Switch for windshield wiper, and washer
42. Signal horn contact
43. Direction indicator switch with headlight flasher and dimmer switch
44. Fuel transmitter
45. Back-up light and direction indicators
46. Tail light and stop light
47. Number plate light

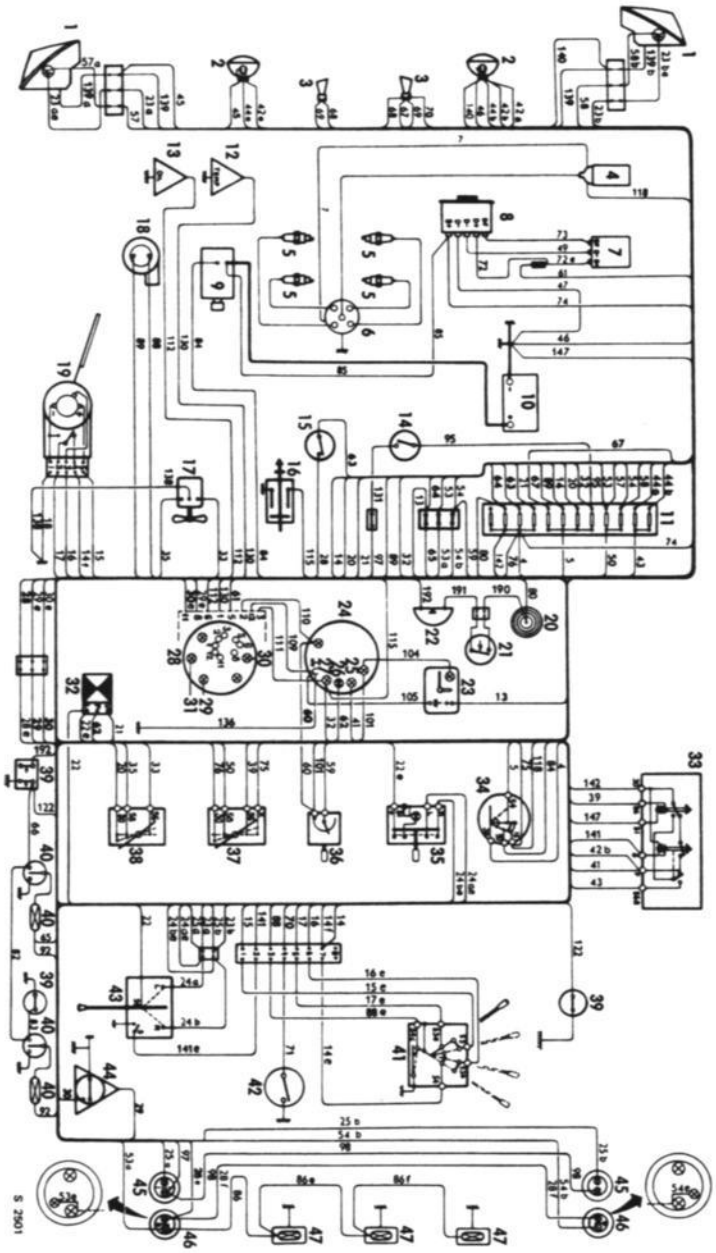

WIRING DIAGRAM STATION WAGON USA MODEL 1970

Cable numbers refer to table on opposite page.

Wiring diagram Saab station wagon USA model 1971

The range of the electrical system is shown by the wiring system on the next page. To simplify the identification, the wires have been covered with insulation of different shades, as follows:

Cable numbers

No.	Color	Area mm^2	No.	Color	Area mm^2	No.	Color	Area mm^2
4	grey	1,5	42a	blue	1,5	82	white	0,75
5	red	1,5	42b	white	2,5	83	white	0,75
7	green	1,5	43	yellow	2,5	84	yellow	1,5
13	blue	0,75	44a	grey	1,5	85	grey	4,0
14	brown	1,0	44b	yellow	1,5	86	green	0,75
14e	brown	1,0	45	black	1,5	86e	green	0,75
14f	brown	1,0	46	black	2,5	86f	green	0,75
15	red	1,0	47	black	4,0	88	black	0,75
15e	red	1,0	49	black	1,0	88e	black	0,75
16	grey	1,0	50	green	1,0	89	brown	0,75
16e	grey	1,0	53	blue	0,75	92	red	0,75
17	blue	1,0	53a	blue	0,75	95	white	1,5
17e	blue	1,0	53e	green	0,75	97	white	1,5
18	black	1,0	54	green	0,75	98	white	1,0
20	white	1,0	54b	green	0,75	101	green	0,75
21	red	1,0	54e	green	0,75	104	green	0,75
22	green	1,0	57	blue	0,75	105	black	0,75
22e	green	1,0	57a	blue	0,75	109	black	0,75
23a	yellow	1,0	58	green	0,75	110	green	0,75
23ae	yellow	1,0	58b	green	0,75	111	red	0,75
23b	white	1,0	59	green	0,75	112	blue	1,0
23be	white	1,0	60	green	0,75	115	yellow	0,75
24a	yellow	1,0	61	red	0,75	118	white	1,0
24ae	yellow	1,0	62	grey	0,75	122	white	0,75
24b	white	1,0	63	red	1,0	130	brown	1,0
24be	white	1,0	64	grey	0,75	131	white	1,5
25a	blue	1,0	65	red	0,75	136	black	1,0
25b	grey	1,0	66	white	0,75	138	black	1,0
28	red	1,0	67	red	1,5	139	black	1,5
28e	red	1,0	68	red	1,0	139a	black	1,0
28f	red	0,75	69	black	1,0	139b	black	1,0
29	grey	0,75	70	black	1,5	140	black	1,5
29e	green	0,75	71	black	1,5	141	brown	0,75
30	brown	0,75	72	red	1,0	141e	brown	0,75
30e	brown	0,75	72e	red	1,0	142	grey	2,5
32	red	0,75	73	yellow	1,0	147	black	0,75
33	yellow	1,0	74	grey	4,0	190	yellow	0,75
35	grey	1,0	75	red	1,0	191	grey	0,75
39	yellow	0,75	76	grey	1,0	192	black	0,75
41	blue	0,75	80	black	1,0			

Key to numbers in Fig.

1. Parking light and direction indicators
2. Headlights
3. Horn
4. Ignition coil
5. Spark plugs
6. Distributor
7. Voltage regulator
8. Alternator
9. Starter
10. Battery
11. Fuse box
12. Temperature transmitter
13. Oil pressure switch
14. Back-up light switch
15. Stop light switch
16. Brake warning contact
17. Heater fan motor
18. Windshield washer pump
19. Windshield wiper motor
20. Cigarette lighter
21. Contact for warning buzzer
22. Buzzer
23. Clock
24. Speedometer and odometer
25. High beam indicator light
26. Direction indicator repeater light
27. Brake warning light
28. Temperature and fuel gauges
29. Indicator light, fuel amount
30. Oil pressure warning light
31. Charge indicator light
32. Flasher unit
33. Dimmer relay
34. Ignition and starter switch
35. Hazard warning flasher switch
36. Instrument illumination rheostat
37. Headlight switch
38. Heater fan switch
39. Dome lamp switch
40. Dome lamp with switch
41. Switch for windshield wiper, and washer
42. Signal horn contact
43. Direction indicator switch with headlight flasher and dimmer switch
44. Fuel transmitter
45. Back-up light and direction indicators
46. Tail light and stop light
47. Number plate light

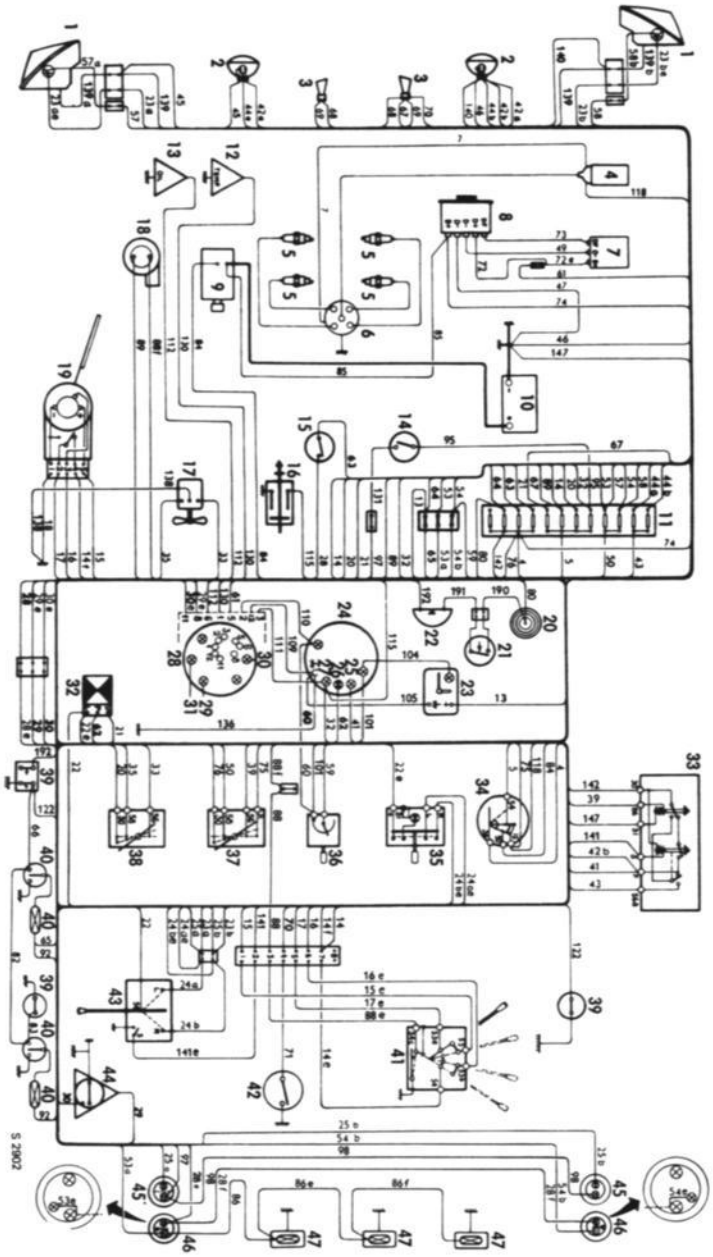

WIRING DIAGRAM STATION WAGON USA MODEL 1971

Cable numbers refer to table on opposite page.

Wiring diagram Saab sedan L.H.D. model 1967

The range of the electrical system is shown by the wiring system on the next page. To simplify the identification, the wires have been covered with insulation of different shades, as follows:

Black	7, 18, 19, 45, 46, 47, 49, 71, 105, 109, 125, 135, 136, 138, 139, 140.
Red	5, 21, 28, 28e, 28f, 32, 39, 61, 63, 65, 67, 68, 72, 111, 113, 126, 129.
Green	16, 22, 50, 51, 52, 53, 54, 55, 56, 57, 58, 60, 101, 104, 110, 121, 133.
Grey	4, 25b, 29, 35, 44a, 62a, 62b, 64, 69, 70, 74, 75, 85, 142.
White	20, 23b, 24b, 40, 40c, 42b, 66, 118, 122, 122e, 128a.
Yellow	17, 23a, 24a, 33, 43, 44b, 73, 84, 128b.
Brown	14, 30, 130, 137, 137c.
Blue	13, 25a, 41, 42a, 112.

KEY TO NUMBERS IN FIGURE 48

1. Direction indicators and side lights
2. Headlights
3. Horn
4. Ignition coil
5. Spark plugs
6. Distributor
7. Voltage regulator
8. Alternator
9. Starter
10. Battery
11. Fuse box
12. Temperature gauge, sending unit
13. Oil pressure switch
14. Stop light switch
15. Heater fan motor
16. Wiper motor
17. Direction indicator repeater lights
18. Charge indicator light
19. High beam indicator light
20. Oil pressure warning light
21. Electric clock
22. Temperature gauge
23. Speedometer with odometer
24. Fuel gauge
25. Dimmer switch
26. Flasher
27. Control relay for headlight flasher
28. Ignition and starter switch
29. Headlight switch and instrument illumination rheostat
30. Heater fan switch
31. Windshield wiper switch
32. Courtesy light switch
33. Courtesy light with switch
34. Horn button
35. Direction indicator switch with headlight flasher
36. Fuel tank gauge
37. Stop lights, direction indicators and tail lights
38. Number plate lights
39. Trunk light

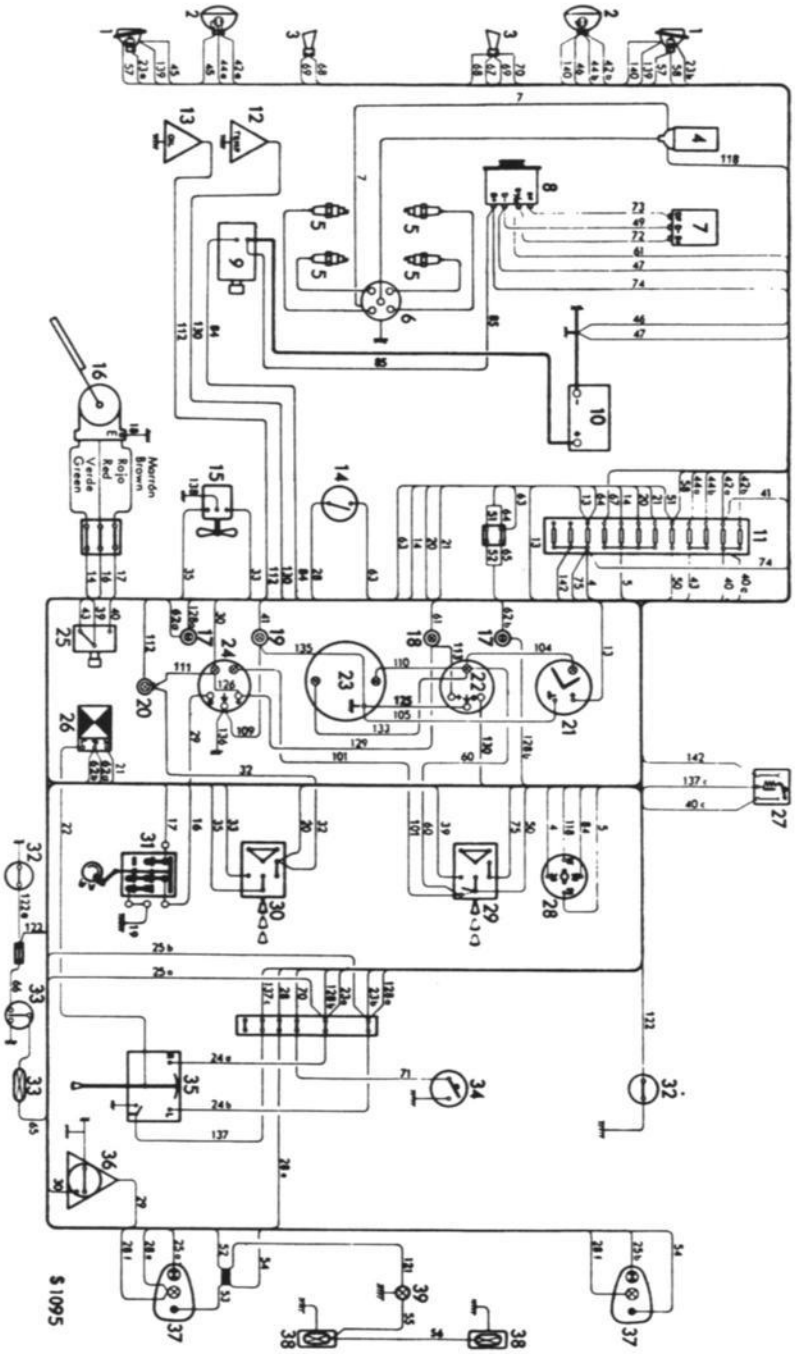

WIRING DIAGRAM SAAB SEDAN L.H.D. MODEL 1967

Cable numbers refer to table on opposite page.

Wiring diagram Saab sedan L.H.D. model 1968

The range of the electrical system is shown by the wiring system on the next page. To simplify the identification, the wires have been covered with insulation of different shades, as follows:

Black 7, 45, 46, 47, 49, 71, 88, 88e, 105, 109, 124, 125, 135, 136, 138, 139, 140.

Red 5, 21, 28, 28e, 28f, 32, 39, 61, 63, 65, 67, 68, 72, 72e, 111, 113, 116, 126, 129.

Green 22, 50, 51, 52, 53, 54, 55, 56, 57, 58, 59, 60, 101,104, 110, 121, 133.

Grey 4, 16, 16e, 25b, 29, 35, 44a, 62, 64, 69, 70, 74, 75, 85, 142.

White 20, 23b, 24b, 40, 40c, 42b, 66, 118, 122, 122e.

Yellow 23a, 24a, 33, 43, 44b, 73, 84, 115.

Brown 14, 30, 89, 130, 137, 137c.

Blue 13, 17, 17e, 25a, 41, 42a, 112.

KEY TO NUMBERS IN THE FIGURE

1. Direction indicators and side lights
2. Headlights
3. Horn
4. Ignition coil
5. Spark plugs
6. Distributor
7. Voltage regulator
8. Alternator
9. Starter
10. Battery
11. Fuse box
12. Temperature gauge, sending unit
13. Oil pressure switch
14. Stop light switch
15. Brake warning contact
16. Heater fan motor
17. Windshield washer pump
18. Wiper motor
19. Charge indicator light
20. Direction indicator repeater light
21. Brake warning light
22. High beam indicator light
23. Oil pressure warning light
24. Electric clock (De Luxe version only.)
25. Temperature gauge
26. Speedometer with odometer
27. Fuel gauge
28. Dimmer switch
29. Flasher
30. Control relay for headlight flasher
31. Ignition and starter switch
32. Headlight switch
33. Instrument illumination rheostat
34. Heater fan switch
35. Courtesy light switch
36. Courtesy light with switch
37. Switch for windshield wiper, -washer and signal horn
38. Direction indicator switch with headlight flasher
39. Fuel tank gauge
40. Stop lights, direction indicators and tail lights
41. Number plate light
42. Trunk light

Cigarette lighter

Back-up light

Only De Luxe version.

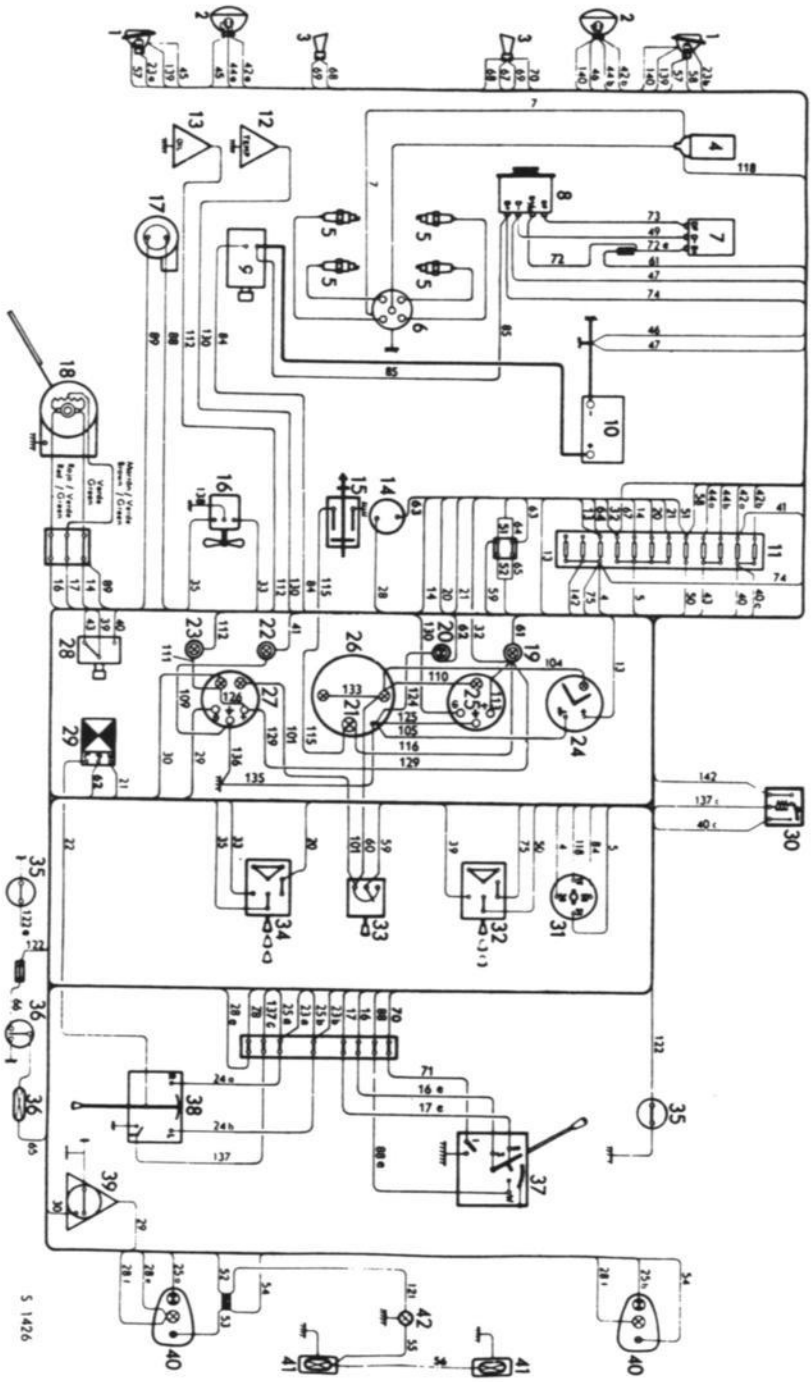

WIRING DIAGRAM SAAB SEDAN L. H. D. MODEL 1968

Cable numbers refer to table on opposite page.

Wiring diagram Saab sedan L.H.D. model 1969

The range of the electrical system is shown by the wiring system on the next page. To simplify the identification, the wires have been covered with insulation of different shades, as follows:

Cable numbers

No.	Color	Area mm2	No.	Color	Area mm2	No.	Color	Area mm2
4	grey	1,5	43	yellow	2,5	75	grey	2,5
5	red	1,5	44a	grey	1,5	84	yellow	1,5
7	black	1,5	44b	yellow	1,5	85	grey	4,0
13	blue	0,75	45	black	1,5	88	black	0,75
14	brown	1,0	46	black	2,5	88e	black	0,75
16	grey	1,0	47	black	4,0	89	brown	0,75
16e	grey	1,0	49	black	1,0	101	green	0,75
17	blue	1,0	50	green	1,0	104	green	0,75
17e	blue	1,0	53	blue	0,75	105	black	0,75
20	white	1,0	53a	blue	0,75	109	black	0,75
21	red	1,0	54	green	0,75	110	green	0,75
22	green	1,0	54b	green	0,75	111	red	0,75
22e	green	1,0	55	green	0,75	112	blue	1,0
23a	yellow	1,0	56	green	0,75	113	white	0,75
23ae	yellow	1,0	57	blue	0,75	115	yellow	0,75
23b	white	1,0	57a	blue	0,75	116	red	0,75
23be	white	1,0	58	green	0,75	118	white	1,0
24a	yellow	0,75	58b	green	0,75	121	green	0,75
24ae	yellow	0,75	59	green	0,75	122	white	0,75
24b	white	0,75	60	green	0,75	124	black	0,75
24be	white	0,75	61	red	0,75	125	black	0,75
25a	blue	1,0	62	grey	0,75	126	white	0,75
25b	grey	1,0	63	red	0,75	129	white	0,75
28	red	1,0	64	grey	0,75	130	brown	1,0
28e	red	1,0	65	red	0,75	133	green	0,75
28f	red	0,75	66	white	0,75	135	black	0,75
29	grey	0,75	67	red	1,5	136	black	0,75
30	brown	0,75	68	red	1,0	137	brown	0,75
32	red	0,75	69	black	1,0	137c	brown	0,75
33	yellow	1,0	70	black	1,5	138	black	1,0
35	grey	1,0	71	black	1,5	139	black	1,5
39	red	2,5	72	red	1,0	139a	black	1,0
41	blue	0,75	72e	red	1,0	139b	black	1,0
42a	blue	1,5	73	yellow	1,0	140	black	1,5
42b	white	2,5	74	grey	4,0	142	grey	1,5
						144	grey	0,75

KEY TO NUMBERS IN THE FIGURE

1. Parking light and direction indicators
2. Headlights
3. Horn
4. Ignition coil
5. Spark plugs
6. Distributor
7. Voltage regulator
8. Alternator
9. Starter
10. Battery
11. Fuse box
12. Temperature transmitter
13. Oil pressure switch
14. Stop light switch
15. Brake warning contact
16. Heater fan motor
17. Windshield washer pump
18. Windshield wiper motor
19. Charge indicator light
20. Direction indicator repeater light
21. Brake warning light
22. High beam indicator light
23. Oil pressure warning light
24. Electric clock (De Luxe only)
25. Temperature gauge (coolant)
26. Speedometer with odometer
27. Fuel gauge
28. Flasher unit
29. Dimmer relay
30. Ignition and starter switch
31. Headlight switch
32. Instrument illumination rheostat
33. Heater fan switch
34. Warning flasher switch
35. Courtesy light switch
36. Courtesy light with switch
37. Switch for windshield wiper, -washer and signal horn
38. Direction indicator switch with headlight flasher and dimmer switch
39. Fuel transmitter
40. Stop lights, direction indicators and tail light
41. Number plate light
42. Trunk light

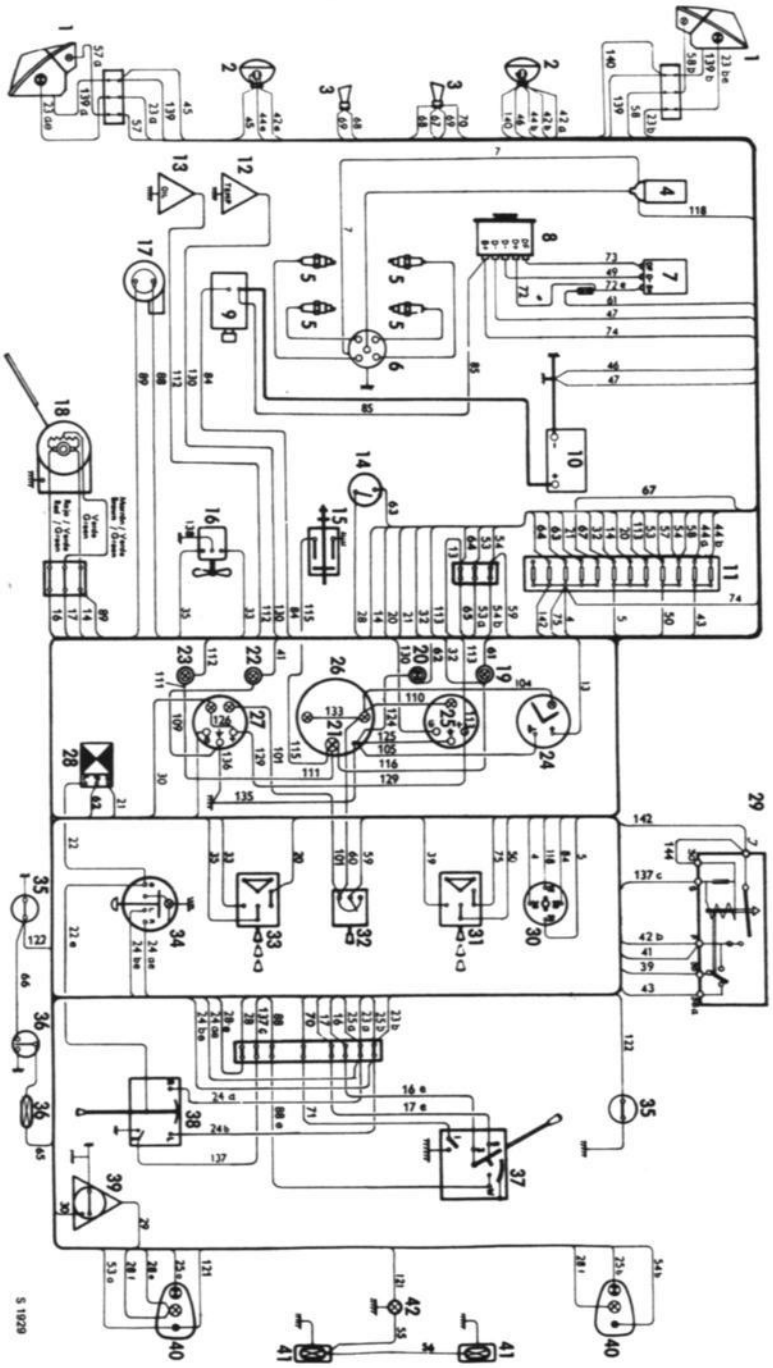

WIRING DIAGRAM SAAB SEDAN L.H.D. MODEL 1969

Cable numbers refer to table on opposite page.

Wiring diagram Saab sedan L.H.D. Model 1970

The range of the electrical system is shown by the wiring system on the next page. To simplify the identification, the wires have been covered with insulation of different shades, as follows:

Cable numbers

No.	Color	Area mm^2	No.	Color	Area mm^2	No.	Color	Area mm^2
4	grey	1,5	32	red	0,75	69	black	1,0
5	red	1,5	33	yellow	1,0	70	black	1,5
7	green	1,5	35	grey	1,0	71	black	1,5
13	blue	0,75	39	yellow	0,75	72	red	1,0
14	brown	1,0	41	blue	0,75	72e	red	1,0
14e	brown	1,0	42a	blue	1,5	73	yellow	1,0
14f	brown	1,0	42b	white	2,5	74	grey	4,0
15	red	1,0	43	yellow	2,5	75	red	1,0
15e	red	1,0	44a	grey	1,5	76	grey	1,0
16	grey	1,0	44b	yellow	1,5	84	yellow	1,5
16e	grey	1,0	45	black	1,5	85	grey	4,0
17	blue	1,0	46	black	2,5	88	black	0,75
17e	blue	1,0	47	black	4,0	88e	black	0,75
18	black	1,0	49	black	1,0	89	brown	0,75
20	white	1,0	50	green	1,0	101	green	0,75
21	red	1,0	53	blue	0,75	109	black	0,75
22	green	1,0	53a	blue	0,75	110	green	0,75
22e	green	1,0	54	green	0,75	111	red	0,75
23a	yellow	1,0	54b	green	0,75	112	blue	1,0
23ae	yellow	1,0	55	green	0,75	115	yellow	0,75
23b	white	1,0	56	black	0,75	118	white	1,0
23be	white	1,0	57	blue	0,75	121	green	0,75
24a	yellow	1,0	57a	blue	0,75	122	white	0,75
24ae	yellow	1,0	58	green	0,75	130	brown	1,0
24b	white	1,0	58b	green	0,75	136	black	1,0
24be	white	1,0	59	green	0,75	138	black	1,0
25a	blue	1,0	60	green	0,75	139	black	1,5
25b	grey	1,0	61	red	0,75	139a	black	1,0
28	red	1,0	62	grey	0,75	139b	black	1,0
28e	red	1,0	63	red	1,0	140	black	1,5
28f	red	0,75	64	grey	0,75	141	brown	0,75
29	grey	0,75	65	red	0,75	141e	brown	0,75
29e	green	0,75	66	white	0,75	142	grey	2,5
30	brown	0,75	67	red	1,5	147	black	0,75
30e	brown	0,75	68	red	1,0			

Key to numbers in the fig.

1. Parking light and direction indicators
2. Headlights
3. Horn
4. Ignition coil
5. Spark plugs
6. Distributor
7. Voltage regulator
8. Alternator
9. Starter
10. Battery
11. Fuse box
12. Temperature transmitter
12. Oil pressure switch
14. Stop light switch
15. Brake warning contact
16. Heater fan motor
17. Windshield washer pump
18. Windshield wiper motor
19. Speedometer with odometer
20. High beam indicator light
21. Direction indicator repeater light
22. Brake warning light
23. Temperature and fuel gauges
24. Indicator light, fuel amount
25. Oil pressure warning light
26. Charge indicator light
27. Flasher unit
28. Dimmer relay
29. Ignition and starter switch
30. Hazard warning flasher switch
31. Instrument illumination rheostat
32. Headlight and parking light switch
33. Heater fan switch
34. Courtesy light with switch
36. Switch for windshield wiper, and washer
37. Signal horn contact
38. Direction indicator switch with headlight flasher and dimmer switch
39. Fuel transmitter
40. Stop lights, direction indicators and tail light
41. Number plate light
42. Trunk light

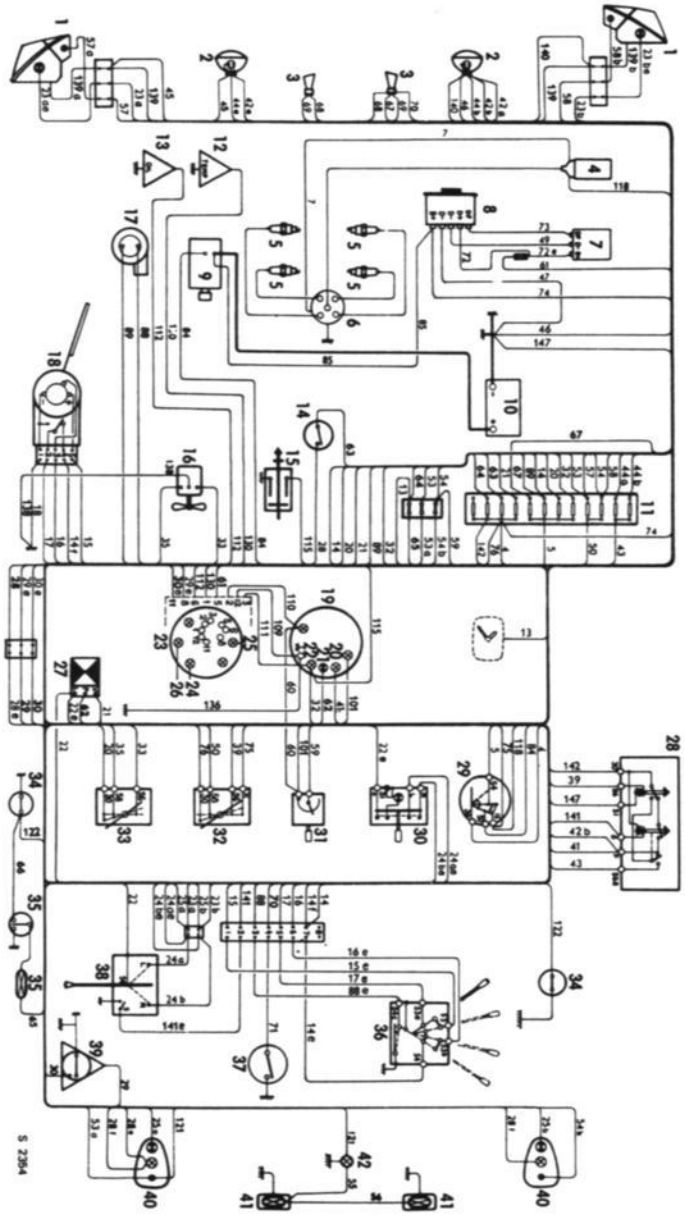

WIRING DIAGRAM SAAB SEDAN L.H.D. MODEL 1970

Cable numbers refer to table on opposite page.

Wiring diagram Saab sedan L.H.D. model 1971

The range of the electrical system is shown by the wiring system on the next page. To simplify the identification, the wires have been covered with insulation of different shades, as follows:

Cable numbers

No.	Color	Area mm²	No.	Color	Area mm²	No.	Color	Area mm²
4	grey	1,5	42a	blue	1,5	77e	red	0,75
5	red	1,5	42b	white	2,5	77f	red	0,75
7	green	1,5	43	yellow	2,5	78	brown	0,75
13	blue	0,75	44a	grey	1,5	79	green	0,75
14	brown	1,0	44b	yellow	1,5	81	grey	0,75
14e	brown	1,0	45	black	1,5	81e	blue	0,75
14f	brown	1,0	46	black	2,5	82	yellow	0,75
15	red	1,0	49	black	1,0	82e	black	0,75
15e	red	1,0	50	green	1,0	83	black	0,75
16	grey	1,0	53	blue	0,75	83e	black	0,75
16e	grey	1,0	53a	blue	0,75	84	yellow	1,5
17	blue	1,0	54	green	0,75	85	grey	4,0
17e	blue	1,0	54b	green	0,75	88	black	0,75
18	black	1,0	55	green	0,75	88e	black	0,75
20	white	1,0	56	black	0,75	88f	black	0,75
21	red	1,0	57	blue	0,75	88g	black	0,75
22	green	1,0	57a	blue	0,75	89	brown	0,75
22e	green	1,0	58	green	0,75	89f	yellow	0,75
23a	yellow	1,0	58b	green	0,75	101	green	0,75
23ae	yellow	1,0	59	green	0,75	109	black	0,75
23b	white	1,0	60	green	0,75	110	green	0,75
23be	white	1,0	61	red	0,75	111	red	0,75
24a	yellow	1,0	62	grey	0,75	112	blue	1,0
24ae	yellow	1,0	63	red	1,0	115	yellow	0,75
24b	white	1,0	64	grey	0,75	118	white	1,0
24be	white	1,0	65	red	0,75	121	green	0,75
25a	blue	1,0	66	white	0,75	122	white	0,75
25b	grey	1,0	67	red	1,5	123	blue	0,75
28	red	1,0	68	red	1,0	130	brown	1,0
28e	red	1,0	69	black	1,0	136	black	1,0
28f	red	0,75	70	black	1,5	138	black	1,0
29	grey	0,75	71	black	1,5	139	black	1,5
29e	green	0,75	72	red	1,0	139a	black	1,0
30	brown	0,75	72e	red	1,0	139b	black	1,0
30e	brown	0,75	73	yellow	1,0	140	black	1,5
32	red	0,75	74	grey	4,0	141	brown	0,75
33	yellow	1,0	75	red	1,0	141e	brown	0,75
35	grey	1,0	76	grey	1,0	142	grey	2,5
39	yellow	0,75	77	red	0,75	147	black	0,75
41	blue	0,75	77a	red	0,75			

Key to numbers in Fig.

1. Parking light and direction indicators
2. Headlights
3. Horn
4. Headlight wiper motor
5. Ignition coil
6. Spark plugs
7. Distributor
8. Voltage regulator
9. Alternator
10. Starter
11. Relay, headlight wiper
12. Fuse for headlight wiper
13. Battery
14. Fuse box
15. Temperature transmitter
16. Oil pressure switch
17. Stop light switch
18. Brake warning contact
19. Heater fan motor
20. Windshield washer pump
21. Headlight washer pump
22. Windshield wiper motor
23. Manoeuvre relay, headlight wiper
24. Speedometer with odometer
25. High beam indicator light
26. Direction indicator repeater light
27. Brake warning light
28. Temperature and fuel gauges
29. Indicator light, fuel amount
30. Oil pressure warning light
31. Charge indicator light
32. Flasher unit
33. Dimmer relay
34. Ignition and starter switch
35. Hazard warning flasher switch
36. Diode
37. Instrument illumination rheostat
38. Headlight switch
39. Heater fan switch
40. Courtesy light switch
41. Courtesy light with switch
42. Switch for windshield wiper, headlight wiper and washer
43. Signal horn contact
44. Direction indicator switch with headlight flasher and dimmer switch
45. Fuel transmitter
46. Stop lights, direction indicators and tail light
47. Number plate light
48. Trunk light with contact

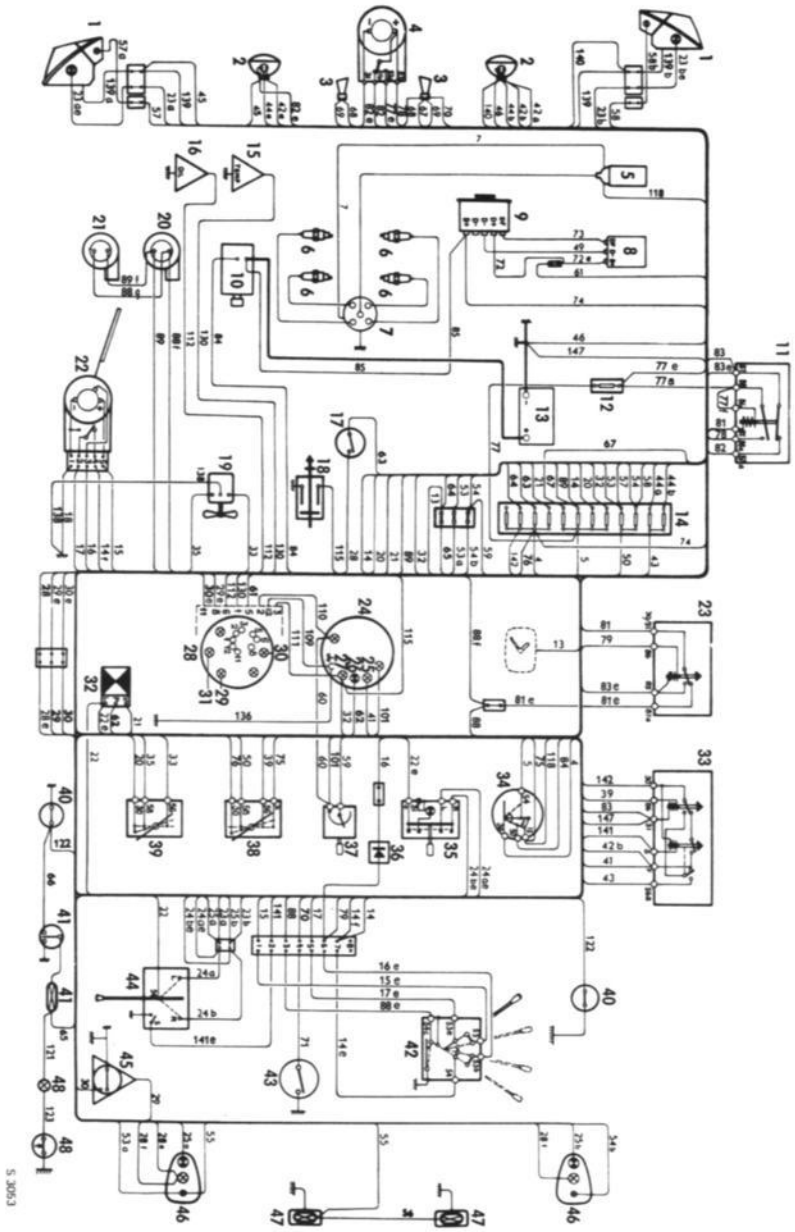

S 3053

WIRING DIAGRAM SAAB SEDAN L.H.D. MODEL 1971

Cable numbers refer to table on opposite page.

Wiring diagram Saab sedan R.H.D. model 1967

The range of the electrical system is shown by the wiring system on the next page. To simplify the identification, the wires have been covered with insulation of different shades, as follows:

Black	7, 18, 19, 45, 46, 47, 49, 71, 105, 109, 125, 135, 136, 138, 139, 140.
Red	5, 21, 28, 28e, 28f, 32, 39, 61, 63, 65, 67, 68, 72, 111, 113, 126, 129.
Green	16, 22, 50, 51, 52, 53, 54, 55, 56, 57, 58, 60, 101, 104, 110, 121, 133, 143.
Grey	4, 25b, 25be, 29, 29e, 35, 44a, 62a, 62b, 64, 69, 70, 74, 75, 85, 142, 144.
White	20, 23b, 24b, 40, 42b, 66, 118, 122, 122e, 128a.
Yellow	17, 23a, 24a, 33, 43, 44b, 73, 84, 128b.
Brown	14, 30, 30e, 130, 137, 141.
Blue	13, 25a, 25ae, 41, 42a, 112, 145.

KEY TO NUMBERS IN THE FIGURE

1. Direction indicator lights and side lights
2. Headlights
3. Horns
4. Ignition coil
5. Spark plugs
6. Distributor
7. Voltage regulator
8. Generator
9. Starter motor
10. Battery
11. Fuse box
12. Temperature sender
13. Oil pressure switch
14. Stop light switch
15. Heater motor
16. Windshield wiper motor
17. Direction indicator warning lights
18. High beam warning light
19. Generator warning light
20. Oil pressure warning light
21. Fuel gauge
22. Speedometer with odometer
23. Temperature gauge
24. Electric clock
25. Flasher
26. Headlamp control relay
27. Dimmer relay
28. Ignition and starter switch
29. Headlights and side lights switch with instrument illumination rheostat
30. Heater switch
31. Windshield wiper switch
32. Courtesy light switches
33. Interior light with switch
34. Horn ring
35. Direction indicators switch with headlight flasher an dimmer switch
36. Fuel tank gauge
37. Stop lights, direction indicator and rear lights
38. Number plate lights
39. Trunk lights

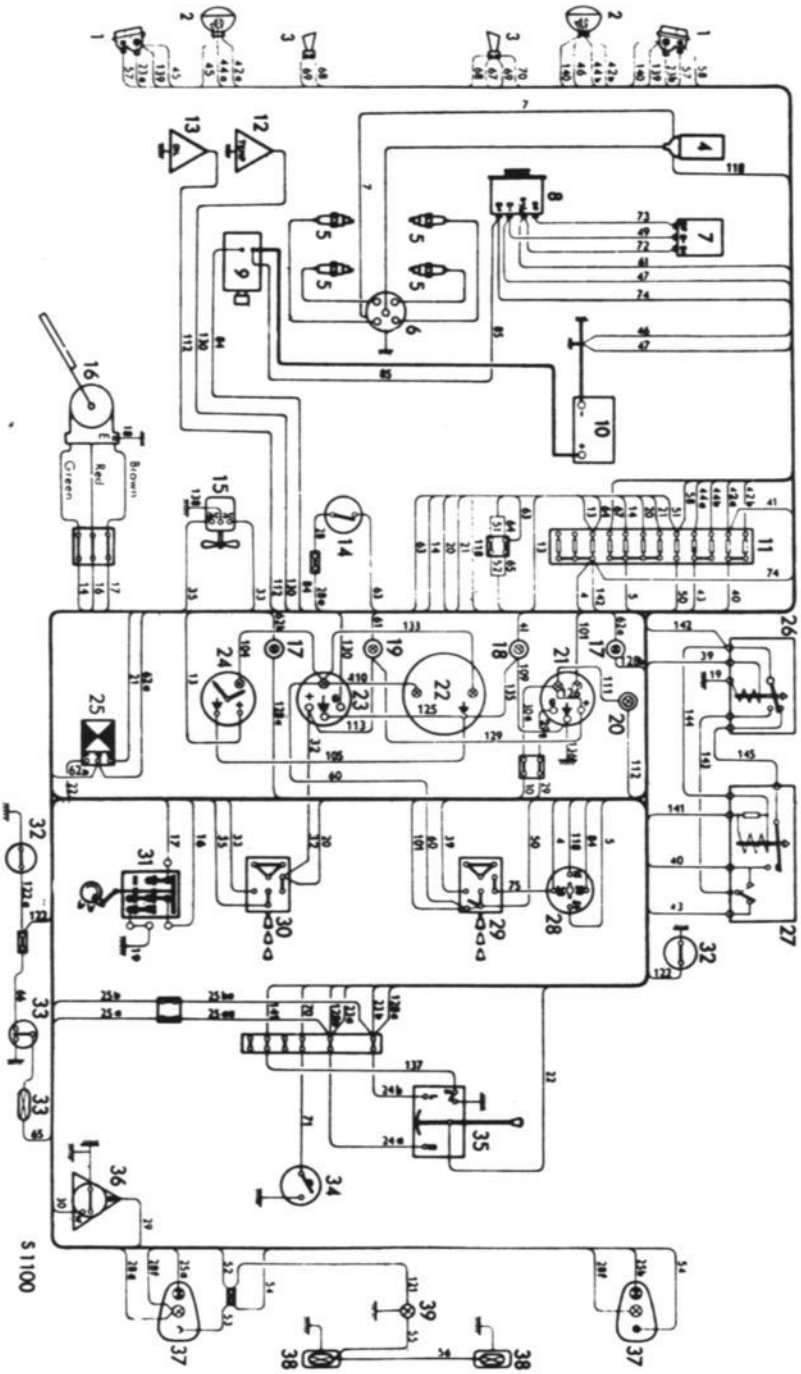

WIRING DIAGRAM SAAB SEDAN R.H.D. MODEL 1967

Cable numbers refer to table on opposite page.

Wiring diagram Saab sedan R.H.D. model 1968

The range of the electrical system is shown by the wiring system on the next page. To simplify the identification, the wires have been covered with insulation of different shades, as follows:

Black 7, 19, 45, 46, 47, 49, 71, 88, 88e, 105, 109, 124, 125, 135, 136, 138, 139, 140.

Red 5, 21, 28, 28e, 28f, 32, 39, 61, 63, 65, 67, 68, 72, 72e, 111, 113, 116, 126, 129.

Green 22, 50, 51, 52, 53, 54, 55, 56, 57, 58, 59, 60, 101, 104, 110, 121, 133, 143.

Grey 4, 16, 16e, 25b, 25be, 29, 29e, 35, 44a, 62b, 64, 69, 70, 74, 75, 85, 142, 144.

White 20, 23b, 24b, 40, 40c, 42b, 66, 118, 122, 122e.

Yellow 23a, 24a, 33, 43, 44b, 73, 84, 115.

Brown 14, 30, 30e, 89, 130, 137, 141.

Blue 13, 17, 17e, 25a, 25ae, 41, 42a, 112, 145.

KEY TO NUMBERS IN THE FIGURE.

1. Direction indicators and side lights
2. Headlights
3. Horn
4. Ignition coil
5. Spark plugs
6. Distributor
7. Voltage regulator
8. Alternator
9. Starter
10. Battery
11. Fuse box
12. Temperature gauge, sending unit
13. Oil pressure switch
14. Stop light switch
15. Brake warning contact
16. Heater fan motor
17. Windshield washer pump
18. Wiper motor
19. Charge indicator light
20. Direction indicator repeater light
21. Brake warning light
22. High beam indicator light
23. Oil pressure warning light
24. Fuel gauge
25. Speedometer with odometer
26. Temperature gauge
27. Electric clock (Extra equipment)
28. Flasher
29. Manoeuvre relay, light
30. Dimmer relay
31. Ignition and starter switch
32. Headlight switch
33. Instrument illumination rheostat
34. Heater fan switch
35. Courtesy light switch
36. Courtesy light with switch
37. Direction indicator switch with headlight flasher and dimmer switch
38. Fuel tank gauge
39. Switch for windshield wiper, -washer and signal horn
40. Stop lights, direction indicators and tail lights
41. Number plate light
42. Trunk light

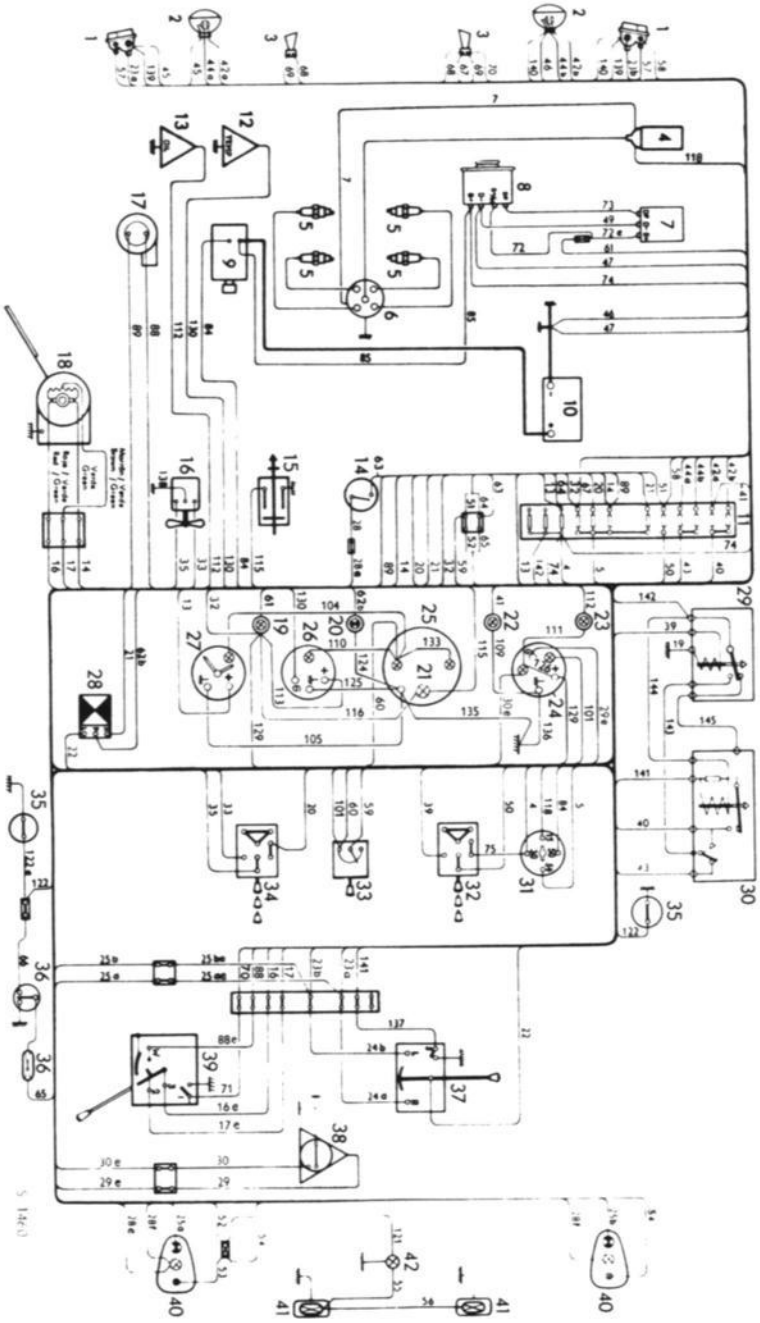

WIRING DIAGRAM SAAB SEDAN R.H.D. MODEL 1968

Cable numbers refer to table on opposite page.

Wiring diagram Saab sedan R.H.D. model 1969

The range of the electrical system is shown by the wiring system on the next page. To simplify the identification, the wires have been covered with insulation of different shades, as follows:

Cable numbers

No.	Color	Area mm2	No.	Color	Area mm2	No.	Color	Area mm2
4	grey	1,5	42a	blue	1,5	75	grey	2,5
5	red	1,5	42b	white	2,5	84	yellow	1,5
7	black	1,5	43	yellow	2,5	85	grey	4,0
13	blue	0,75	44a	grey	1,5	88	black	0,75
14	brown	1,0	44b	yellow	1,5	88e	black	0,75
16	grey	1,0	45	black	1,5	89	brown	0,75
16e	grey	1,0	46	black	2,5	101	green	0,75
17	blue	1,0	47	black	4,0	104	green	0,75
17e	blue	1,0	49	black	1,0	105	black	0,75
20	white	1,0	50	green	1,0	109	black	0,75
21	red	1,0	53	blue	0,75	110	green	0,75
22	green	1,0	53a	blue	0,75	111	red	0,75
22e	green	1,0	54	green	0,75	112	blue	1,0
23a	yellow	1,0	54b	green	0,75	113	white	0,75
23ae	yellow	1,0	55	green	0,75	115	yellow	0,75
23b	white	1,0	56	green	0,75	116	red	0,75
23be	white	1,0	57	blue	0,75	118	white	1,0
24a	yellow	0,75	57a	blue	0,75	121	green	0,75
24ae	yellow	0,75	58	green	0,75	122	white	0,75
24b	white	0,75	58b	green	0,75	124	black	0,75
24be	white	0,75	59	green	0,75	125	black	0,75
25a	blue	1,0	60	green	0,75	126	white	0,75
25ae	blue	1,0	61	red	0,75	129	white	0,75
25b	grey	1,0	62	grey	0,75	130	brown	1,0
25be	grey	1,0	63	red	0,75	133	green	0,75
28	red	1,0	64	grey	0,75	135	black	0,75
28e	red	1,0	65	red	0,75	136	black	0,75
28f	red	0,75	66	white	0,75	137	brown	0,75
29	grey	0,75	67	red	1,5	137c	brown	0,75
29e	grey	0,75	68	red	1,0	138	black	1,0
30	brown	0,75	69	black	1,0	139	black	1,0
30e	brown	0,75	70	black	1,5	139a	black	1,0
32	red	0,75	71	black	1,5	139b	black	1,0
33	yellow	1,0	72	red	1,0	140	black	1,5
35	grey	1,0	72e	red	1,0	142	grey	1,5
39	red	2,5	73	yellow	1,0	144	grey	0,75
41	blue	0,75	74	grey	4,0			

KEY TO NUMBERS IN THE FIGURE

1. Parking light and direction indicators
2. Headlights
3. Horn
4. Ignition coil
5. Spark plugs
6. Distributor
7. Voltage regulator
8. Alternator
9. Starter
10. Battery
11. Fuse box
12. Temperature transmitter
13. Oil pressure switch
14. Stop light switch
15. Brake warning contact
16. Heater fan motor
17. Windshield washer pump
18. Windshield wiper motor
19. Charge indicator light
20. Direction indicator repeater light
21. Brake warning light
22. High beam indicator light
23. Oil pressure warning light
24. Fuel gauge
25. Speedometer with odometer
26. Temperature gauge (coolant)
27. Electric clock (De Luxe only)
28. Flasher unit
29. Dimmer relay
30. Ignition and starter switch
31. Headlight switch
32. Instrument illumination rheostat
33. Heater fan switch
34. Warning flasher switch
35. Courtesy light switch
36. Courtesy light with switch
37. Direction indicator switch with headlight flasher and dimmer switch
38. Fuel transmitter
39. Switch for windshield wiper, -washer and signal horn
40. Stop lights, direction indicators and tail light
41. Number plate light
42. Trunk light

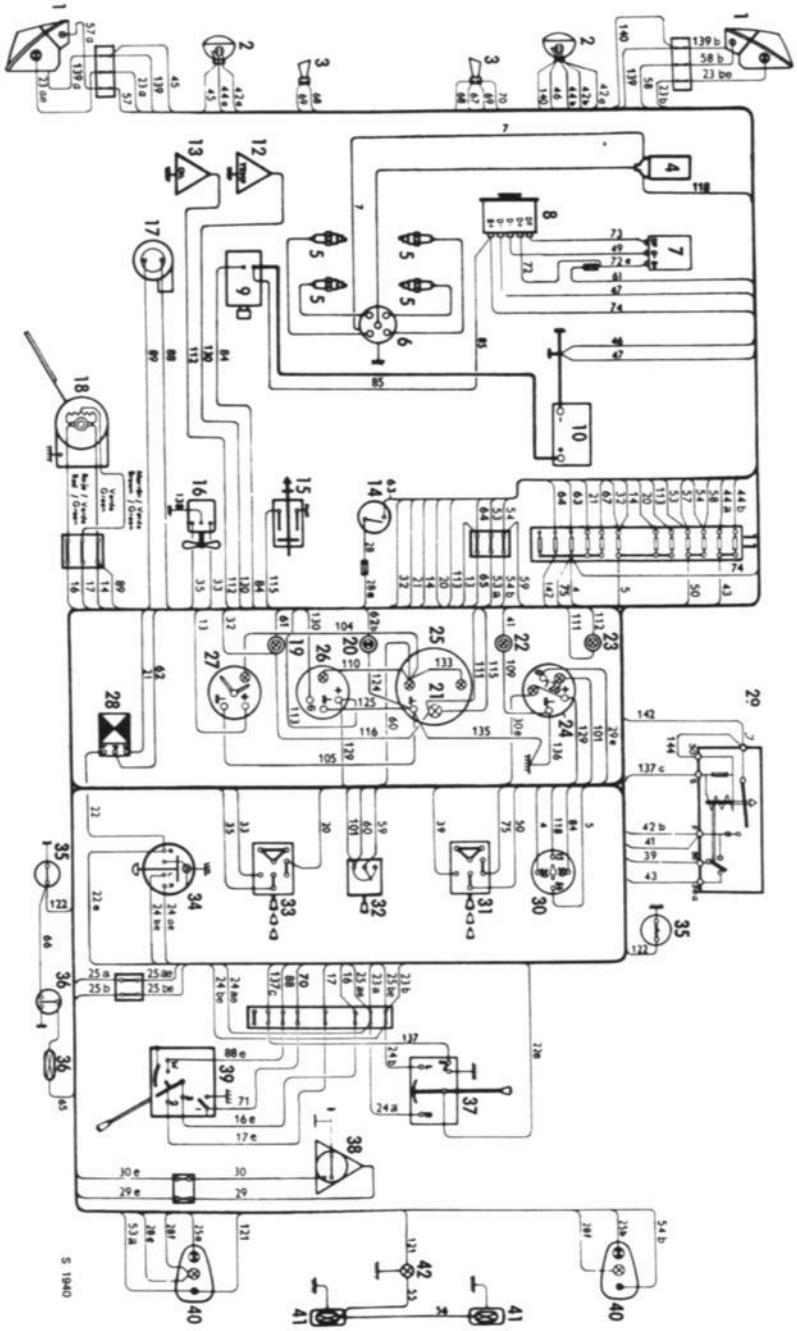

WIRING DIAGRAM SAAB SEDAN R.H.D. MODEL 1969

Cable numbers refer to table on opposite page.

Wiring diagram Saab sedan R.H.D. model 1970

The range of the electrical system is shown by the wiring system on the next page. To simplify the identification, the wires have been covered with insulation of different shades, as follows:

No.	Color	Area mm^2	No.	Color	Area mm^2	No.	Color	Area mm^2
4	grey	1,5	30	brown	0,75	67	red	1,5
5	red	1,5	30e	brown	0,75	68	red	1,0
7	green	1,5	30f	brown	0,75	69	black	1,0
13	blue	0,75	32	red	0,75	70	black	1,5
14	brown	1,0	33	yellow	1,0	71	black	1,5
14e	brown	1,0	35	grey	1,0	72	red	1,0
14f	brown	1,0	39	yellow	0,75	72e	red	1,0
15	red	1,0	41	blue	0,75	73	yellow	1,0
15e	red	1,0	42a	blue	1,5	74	grey	4,0
16	grey	1,0	42b	white	2,5	75	red	1,0
16e	grey	1,0	43	yellow	2,5	76	grey	1,0
17	blue	1,0	44a	grey	1,5	84	yellow	1,5
17e	blue	1,0	44b	yellow	1,5	85	grey	4,0
18	black	1,0	45	black	1,5	88	black	0,75
20	white	1,0	46	black	2,5	88e	black	0,75
21	red	1,0	47	black	4,0	89	brown	0,75
22	green	1,0	49	black	1,0	101	green	0,75
22e	green	1,0	50	green	1,0	109	black	0,75
23a	yellow	1,0	53	blue	0,75	110	green	0,75
23ae	yellow	1,0	53a	blue	0,75	111	red	0,75
23b	white	1,0	54	green	0,75	112	blue	1,0
23be	white	1,0	54b	green	0,75	115	yellow	0,75
24a	yellow	1,0	55	green	0,75	118	white	1,0
24ae	yellow	1,0	56	black	0,75	121	green	0,75
24b	white	1,0	57	blue	0,75	122	white	0,75
24be	white	1,0	57a	blue	0,75	130	brown	1,0
25a	blue	1,0	58	green	0,75	136	black	1,0
25ae	blue	1,0	58b	green	0,75	138	black	1,0
25b	grey	1,0	59	green	0,75	139	black	1,5
25be	grey	1,0	60	green	0,75	139a	black	1,0
28	red	1,0	61	red	0,75	139b	black	1,0
28e	red	1,0	62	grey	0,75	140	black	1,5
28f	red	0,75	63	red	1,0	141	brown	0,75
29	grey	0,75	64	grey	0,75	141e	brown	0,75
29e	green	0,75	65	red	0,75	142	grey	2,5
29f	grey	0,75	66	white	0,75	147	black	0,75

KEY TO NUMBERS IN THE FIGURE

1. Parking light and direction indicators
2. Headlights
3. Horn
4. Ignition coil
5. Spark plugs
6. Distributor
7. Voltage regulator
8. Alternator
9. Starter
10. Battery
11. Fuse box
12. Temperature transmitter
13. Oil pressure switch
14. Stop light switch
15. Brake warning contact
16. Heater fan motor
17. Windshield washer pump
18. Windshield wiper motor
19. Speedometer with odometer
20. High beam indicator light
21. Direction indicator repeater light
22. Brake warning light
23. Temperature and fuel gauges
24. Indicator light, fuel amount
25. Oil pressure warning light
26. Charge indicator light
27. Flasher unit
28. Dimmer relay
29. Ignition and starter switch
30. Hazard warning flasher switch
31. Instrument illumination rheostat
32. Headlight switch
33. Heater fan switch
34. Courtesy light switch
35. Courtesy light with switch
36. Switch for windshield wiper, and washer
37. Signal horn contact
38. Direction indicator switch with headlight flasher and dimmer switch
39. Fuel transmitter
40. Stop lights, direction indicators and tail light
41. Number plate light
42. Trunk light

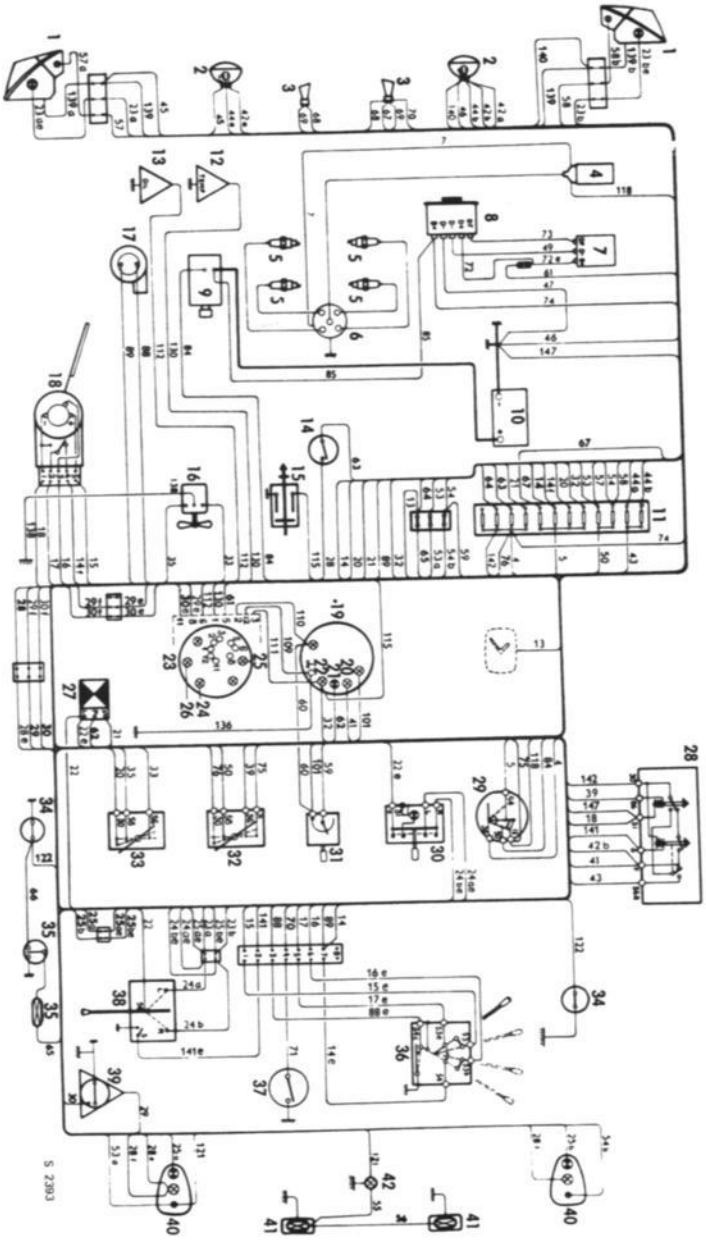

WIRING DIAGRAM SAAB SEDAN R.H.D. MODEL 1970
Cable numbers refer to table on opposite page.

Wiring diagram Saab sedan R.H.D. model 1971

The range of the electrical system is shown by the wiring system on the next page. To simplify the identification, the wires have been covered with insulation of different shades, as follows:

Cable numbers

No.	Color	Area mm^2	No.	Color	Area mm^2	No.	Color	Area mm^2
4	Grey	1,5	41	Blue	0,75	77f	Red	0,75
5	Red	1,5	42a	Blue	1,5	78	Brown	0,75
7	Green	1,5	42b	White	2,5	79	Green	0,75
13	Blue	0,75	43	Yellow	2,5	81	Grey	0,75
14	Brown	1,0	44a	Grey	1,5	81e	Blue	0,75
14e	Brown	1,0	44b	Yellow	1,5	82	Yellow	0,75
14f	Brown	1,0	45	Black	1,5	82e	Black	0,75
15	Red	1,0	46	Black	2,5	83	Black	0,75
15e	Red	1,0	49	Black	1,0	83e	Black	0,75
16	Grey	1,0	50	Green	1,0	84	Yellow	1,5
16e	Grey	1,0	53	Blue	0,75	85	Grey	4,0
17	Blue	1,0	53a	Blue	0,75	88	Black	0,75
17e	Blue	1,0	54	Green	0,75	88e	Black	0,75
18	Black	1,0	54b	Green	0,75	88f	Black	0,75
20	White	1,0	55	Green	0,75	88g	Black	0,75
21	Red	1,0	56	Black	0,75	89	Brown	0,75
22	Green	1,0	57	Blue	0,75	89f	Yellow	0,75
22e	Green	1,0	57a	Blue	0,75	95	White	1,0
23a	Yellow	1,0	58	Green	0,75	97	White	1,0
23ae	Yellow	1,0	58b	Green	0,75	98	White	0,75
23b	White	1,0	59	Green	0,75	101	Green	0,75
23be	White	1,0	60	Green	0,75	109	Black	0,75
24a	Yellow	1,0	61	Red	0,75	110	Green	0,75
24ae	Yellow	1,0	62	Grey	0,75	111	Red	0,75
24b	White	1,0	63	Red	1,0	112	Blue	1,0
24be	White	1,0	64	Grey	0,75	115	Yellow	0,75
25a	Blue	1,0	65	Red	0,75	118	White	1,0
25ae	Blue	1,0	66	White	0,75	121	Green	0,75
25b	Grey	1,0	67	Red	1,5	122	White	0,75
25be	Grey	1,0	68	Red	1,0	123	Blue	0,75
28	Red	1,0	69	Black	1,0	130	Brown	1,0
28e	Red	1,0	70	Black	1,5	131	White	1,0
28f	Red	0,75	71	Black	1,5	136	Black	1,0
29	Grey	0,75	72	Red	1,0	138	Black	1,0
29e	Grey	0,75	72e	Red	1,0	139	Black	1,5
29f	Grey	0,75	73	Yellow	1,0	139a	Black	1,0
30	Brown	0,75	74	Grey	4,0	139b	Black	1,0
30e	Brown	0,75	75	Red	1,0	140	Black	1,5
30f	Brown	0,75	76	Grey	1,0	141	Brown	0,75
32	Red	0,75	77	Red	0,75	141e	Brown	0,75
33	Yellow	1,0	77a	Red	0,75	142	Grey	2,5
35	Grey	1,0	77e	Red	0,75	147	Black	0,75
39	Yellow	0,75						

Key to numbers in Fig.

1. Parking light and direction indicators
2. Headlights
3. Horn
4. Headlight wiper motor
5. Ignition coil
6. Spark plugs
7. Distributor
8. Voltage regulator
9. Alternator
10. Starter
11. Relay, headlight wiper
12. Fuse for headlight wiper
13. Battery
14. Fuse box
15. Temperature transmitter
16. Oil pressure switch
17. Back-up light switch
18. Stop light switch
19. Brake warning contact
20. Heater fan motor
21. Windshield washer pump
22. Headlight washer pump
23. Windshield wiper motor
24. Manoeuvre relay, headlight wiper
25. Speedometer with odometer
26. High beam indicator light
27. Direction indicator repeater light
28. Brake warning light
29. Temperature and fuel gauges
30. Indicator light, fuel amount
31. Oil pressure warning light
32. Charge indicator light
33. Flasher unit
34. Dimmer relay
35. Ignition and starter switch
36. Hazard warning flasher switch
37. Diode
38. Instrument illumination rheostat
39. Headlight switch
40. Heater fan switch
41. Courtesy light switch
42. Courtesy light with switch
43. Trunk light with contact
44. Switch for windshield wiper, headlight wiper and washer
45. Signal horn contact
46. Direction indicator switch with headlight flasher and dimmer switch
47. Fuel transmitter
48. Stop lights, direction indicators and tail light
49. Back-up light
50. Number plate light

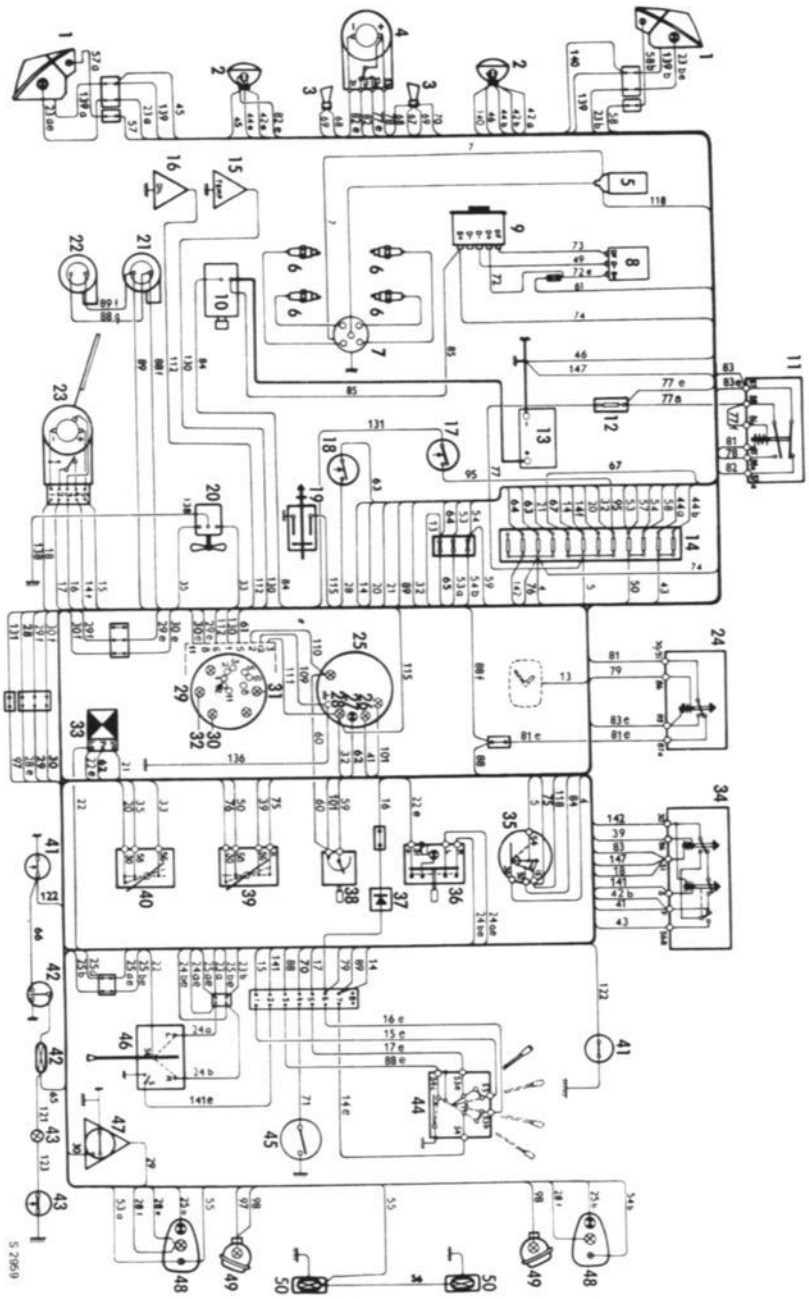

WIRING DIAGRAM SAAB SEDAN R.H.D. MODEL 1971

Cable numbers refer to table on opposite page.

Wiring diagram Saab sedan USA model 1967

The range of the electrical system is shown by the wiring system on the next page. To simplify the identification, the wires have been covered with insulation of different shades, as follows:

Black 7, 18, 19, 45, 46, 47, 49, 71, 80, 105, 109, 125, 135, 136, 138, 139, 140.

Red 5, 21, 28, 28e, 28f, 32, 39, 61, 63, 65, 67, 68, 72, 111, 113, 126, 129.

Green 16, 22, 22e, 22f, 50, 51, 52, 53, 54, 55, 56, 57, 58, 60, 101, 104, 110, 121, 133.

Grey 4, 25b, 29, 35, 44a, 62a, 62b, 64, 69, 70, 74, 75, 85.

White 20, 23b, 24b, 24be, 24bf, 40, 42b, 66, 95, 97, 98, 118, 122, 122e, 128a, 131.

Yellow 17, 23a, 24a, 24ae, 24af, 33, 43, 44b, 73, 84, 128b.

Brown 14, 30, 130, 137.

Blue 13, 25a, 41, 42a, 112.

KEY TO NUMBERS IN THE FIGURE.

1. Parking and direction indicator lights
2. Headlights
3. Horns
4. Ignition coil
5. Spark plugs
6. Distributor
7. Voltage regulator
8. Alternator
9. Starter motor
10. Battery
11. Fuse box
12. Temperature gauge, sending unit
13. Oil pressure switch
14. Black-up light switch
15. Stop light switch
16. Heater motor
17. Windshield wiper motor
18. Direction indicator warning lights
19. Charge indicator light
20. High beam indicator light
21. Oil pressure warning light
22. Electric clock
23. Temperature gauge
24. Speedometer with odometer
25. Fuel gauge
26. Foot dimmer switch
27. Flasher
28. Cigarette lighter
29. Ignition and starter switch
30. Headlight and parking light switch with instrument illumination rheostat
31. Warning flasher switch with control light
32. Heater switch
33. Windshield wiper switch
34. Automatic door switch for dome light
35. Dome light with switch
36. Horn ring
37. Direction indicator switch
38. Fuel tank sending unit
39. Back-up lights
40. Stop lights, direction indicator and tail lights
41. License lights
42. Trunk light

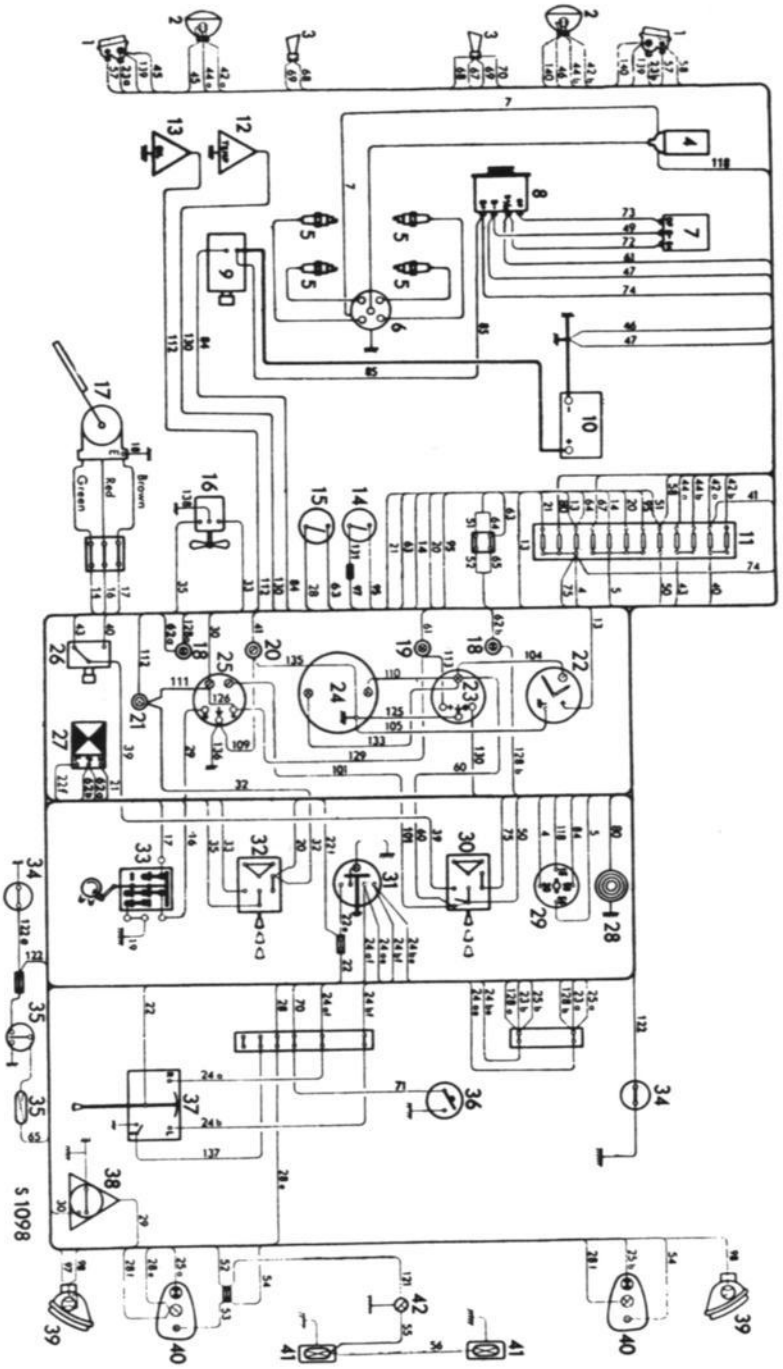

WIRING DIAGRAM SAAB SEDAN USA. MODEL 1967

Cable numbers refer to table on opposite page.

Wiring diagram Saab sedan USA model 1968

The range of the electrical system is shown by the wiring system on the next page. To simplify the identification, the wires have been covered with insulation of different shades, as follows:

Black 7, 45, 46, 47, 69, 70, 71, 88, 88e, 109, 124, 125, 135, 136, 138, 139, 140.

Red 5, 21, 28, 28e, 28f, 32, 39, 61, 63, 65, 67, 68, 72, 72e, 111, 113, 116, 126, 129.

Green 22, 22e, 22f, 50, 51, 52, 53, 54, 55, 56, 57, 58, 59, 60, 101, 110, 121, 133.

Grey 4, 16, 16e, 25b, 29, 35, 44a, 62, 64, 74, 75, 85.

White 20, 23b, 24b, 24be, 24bf, 40, 42b, 66, 95, 97, 98, 118, 122, 122e, 131.

Yellow 23a, 24a, 24ae, 24af, 33, 43, 44b, 73, 84, 115.

Brown 14, 30, 89, 130, 137.

Blue 17, 17e, 25a, 41, 42a, 112.

KEY TO NUMBERS IN THE FIGURE.

1. Direction indicators and side lights
2. Headlights
3. Horn
4. Ignition coil
5. Spark plugs
6. Distributor
7. Voltage regulator
8. Alternator
9. Starter
10. Battery
11. Fuse box
12. Temperature gauge, sending unit
13. Oil pressure switch
14. Back-up light switch
15. Stop light switch
16. Brake warning contact
17. Heater fan motor
18. Windshield washer pump
19. Wiper motor
20. Charge indicator light
21. Direction indicator repeater light
22. Brake warning light
23. High beam indicator light
24. Oil pressure warning light
25. Temperature gauge
26. Speedometer with odometer
27. Fuel gauge
28. Dimmer switch
29. Flasher
30. Igniton and starter switch
31. Headlight switch
32. Instrument illumination rheostat
33. Heater fan switch
34. Warning flasher switch
35. Courtesy light switch
36. Courtesy light with switch
37. Switch for windshield wiper, washer and signal horn
38. Direction indicator switch with headlight flasher
39. Fuel tank gauge
40. Back-up light
41. Stop lights, direction indicators and tail lights
42. Number plate light
43. Trunk light

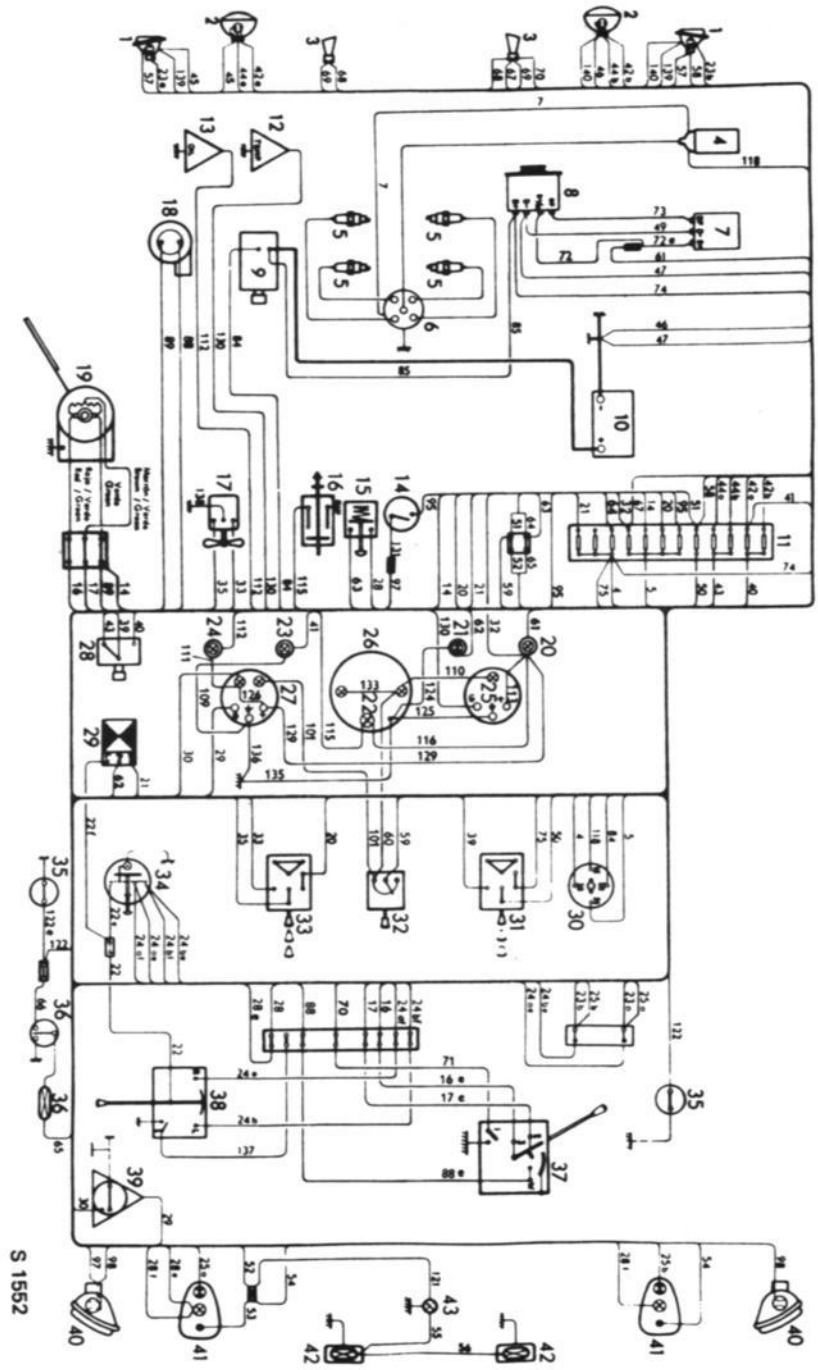

WIRING DIAGRAM SAAB SEDAN USA. MODEL 1968

Cable numbers refer to table on opposite page.

Wiring diagram Saab sedan USA model 1969

The range of the electrical system is shown by the wiring system on the next page. To simplify the identification, the wires have been covered with insulation of different shades, as follows:

Cable numbers

No.	Color	Area mm2	No.	Color	Area mm2	No.	Color	Area mm2
4	grey	1,5	44b	yellow	1,5	88e	black	0,75
5	red	1,5	45	black	1,5	89	brown	0,75
7	black	1,5	46	black	2,5	95	white	1,5
13	blue	0,75	47	black	4,0	97	white	1,5
14	brown	1,0	49	black	1,0	98	white	1,0
16	grey	1,0	50	green	1,0	101	green	0,75
16e	grey	1,0	53	blue	0,75	104	green	0,75
17	blue	1,0	53a	blue	0,75	105	black	0,75
17e	blue	1,0	54	green	0,75	109	black	0,75
20	white	1,0	54b	green	0,75	110	green	0,75
21	red	1,0	55	green	0,75	111	red	0,75
22	green	1,0	56	green	0,75	112	blue	1,0
22e	green	1,0	57	blue	0,75	113	white	0,75
23a	yellow	1,0	57a	blue	0,75	115	yellow	0,75
23ae	yellow	1,0	58	green	0,75	116	red	0,75
23b	white	1,0	58b	green	0,75	118	white	1,0
23be	white	1,0	59	green	0,75	121	green	0,75
24a	yellow	0,75	60	green	0,75	122	white	0,75
24ae	yellow	0,75	61	red	0,75	124	black	0,75
24b	white	0,75	62	grey	0,75	125	black	0,75
24be	white	0,75	63	red	0,75	126	white	0,75
25a	blue	1,0	64	grey	0,75	129	white	0,75
25b	grey	1,0	65	red	0,75	130	brown	1,0
28	red	1,0	66	white	0,75	131	white	1,5
28e	red	1,0	67	red	1,5	133	green	0,75
28f	red	0,75	68	red	1,0	135	black	0,75
29	grey	0,75	69	black	1,0	136	black	0,75
30	brown	0,75	70	black	1,5	137	brown	0,75
32	red	0,75	71	black	1,5	137c	brown	0,75
33	yellow	1,0	72	red	1,0	138	black	1,0
35	grey	1,0	72e	red	1,0	139	black	1,0
39	red	2,5	73	yellow	1,0	139a	black	1,0
41	blue	0,75	74	grey	4,0	139b	black	1,0
42a	blue	1,5	75	grey	2,5	140	black	1,5
42b	white	2,5	84	yellow	1,5	142	grey	1,5
43	yellow	2,5	85	grey	4,0	144	grey	0,75
44a	grey	1,5	88	black	0,75			

KEY TO NUMBERS IN THE FIGURE

1. Parking light and direction indicators
2. Headlights
3. Horn
4. Ignition coil
5. Spark plugs
6. Distributor
7. Voltage regulator
8. Alternator
9. Starter
10. Battery
11. Fuse box
12. Temperature transmitter
13. Oil pressure switch
14. Stop light switch
15. Back-up light switch
16. Brake warning contact
17. Heater fan motor
18. Windshield washer pump
19. Windshield wiper motor
20. Charge indicator light
21. Direction indicator repeater light
22. Brake warning light
23. High beam indicator light
24. Oil pressure warning light
25. Electric clock (Extra equipment)
26. Temperature gauge
27. Speedometer with odometer
28. Fuel gauge
29. Flasher unit
30. Dimmer relay
31. Ignition and starter switch
32. Headlight switch
33. Instrument illumination rheostat
34. Heater fan switch
35. Warning flasher switch
36. Courtesy light switch
37. Courtesy light with switch
38. Switch for windshield wiper, -washer and signal horn
39. Direction indicator switch with headlight flasher and dimmer switch
40. Fuel transmitter
41. Back-up lights
42. Stop lights, direction indicators and tail light
43. Number plate light
44. Trunk light

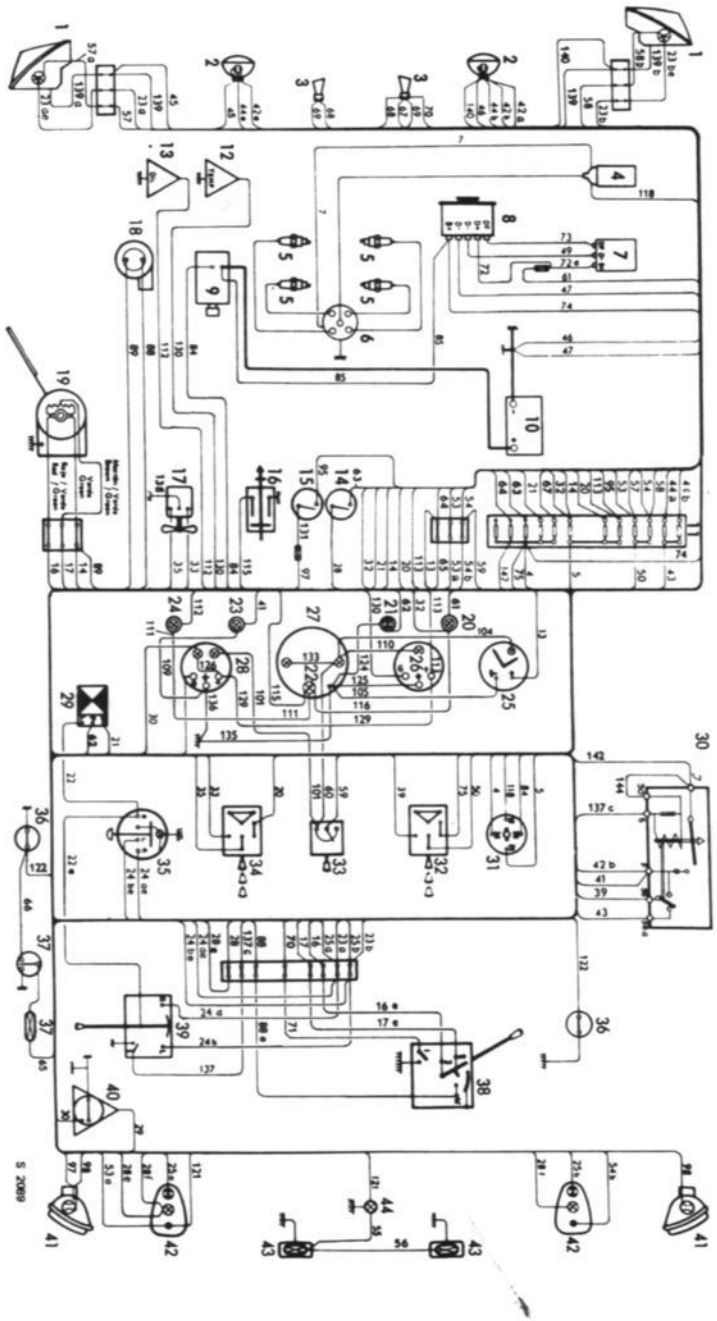

WIRING DIAGRAM SAAB SEDAN USA MODEL 1969

Cable numbers refer to table on opposite page.

Wiring diagram Saab sedan USA model 1970

The range of the electrical system is shown by the wiring system on the next page. To simplify the identification. the wires have been covered with insulation of different shades, as follows:

No.	Color	Area mm²	No.	Color	Area mm²	No.	Color	Area mm²
4	grey	1,5	39	yellow	0,75	74	grey	4,0
5	red	1,5	41	blue	0,75	75	red	1,0
7	green	1,5	42a	blue	1,5	76	grey	1,0
13	blue	0,75	42b	white	2,5	80	black	1,0
14	brown	1,0	43	yellow	2,5	84	yellow	1,5
14e	brown	1,0	44a	grey	1,5	85	grey	4,0
14f	brown	1,0	44b	yellow	1,5	88	black	0,75
15	red	1,0	45	black	1,5	88e	black	0,75
15e	red	1,0	46	black	2,5	89	brown	0,75
16	grey	1,0	47	black	4,0	95	white	1,5
16e	grey	1,0	49	black	1,0	97	white	1,5
17	blue	1,0	50	green	1,0	98	white	1,0
17e	blue	1,0	53	blue	0,75	101	green	0,75
18	black	1,0	53a	blue	0,75	104	green	0,75
20	white	1,0	54	green	0,75	105	black	0,75
21	red	1,0	54b	green	0,75	109	black	0,75
22	green	1,0	55	green	0,75	110	green	0,75
22e	green	1,0	56	black	0,75	111	red	0,75
23a	yellow	1,0	57	blue	0,75	112	blue	1,0
23ae	yellow	1,0	57a	blue	0,75	115	yellow	0,75
23b	white	1,0	58	green	0,75	118	white	1,0
23be	white	1,0	58b	green	0,75	121	green	0,75
24a	yellow	1,0	59	green	0,75	122	white	0,75
24ae	yellow	1,0	60	green	0,75	130	brown	1,0
24b	white	1,0	61	red	0,75	131	white	1,5
24be	white	1,0	62	grey	0,75	136	black	1,0
25a	blue	1,0	63	red	1,0	138	black	1,0
25b	grey	1,0	64	grey	0,75	139	black	1,5
28	red	1,0	65	red	0,75	139a	black	1,0
28e	red	1,0	66	white	0,75	139b	black	1,0
28f	red	0,75	67	red	1,5	140	black	1,5
29	grey	0,75	68	red	1,0	141	brown	0,75
29e	green	0,75	69	black	1,0	141e	brown	0,75
30	brown	0,75	70	black	1,5	142	grey	2,5
30e	brown	0,75	71	black	1,5	147	black	0,75
32	red	0,75	72	red	1,0	190	yellow	0,75
33	yellow	1,0	72e	red	1,0	191	grey	0,75
35	grey	1,0	73	yellow	1,0	192	black	0,75

KEY TO NUMBERS IN THE FIGURE

1. Parking light and direction indicators
2. Headlights
3. Horn
4. Ignition coil
5. Spark plugs
6. Distributor
7. Voltage regulator
8. Alternator
9. Starter
10. Battery
11. Fuse box
12. Temperature transmitter
13. Oil pressure switch
14. Back-up light switch
15. Stop light switch
16. Brake warning contact
17. Heater fan motor
18. Windshield washer pump
19. Windshield wiper motor
20. Cigarette lighter
21. Contact for warning buzzer
22. Buzzer
23. Clock
24. Speedometer with odometer
25. High beam indicator light
26. Direction indicator repeater light
27. Brake warning light
28. Temperature and fuel gauges
29. Indicator light, fuel amount
30. Oil pressure warning light
31. Charge indicator light
32. Flasher unit
33. Dimmer relay
34. Ignition and starter switch
35. Hazard warning flasher switch
36. Instrument illumination rheostat
37. Headlight switch
38. Heater fan switch
39. Dome lamp switch
40. Dome lamp with switch
41. Switch for windshield wiper, and washer
42. Signal horn contact
43. Direction indicator switch with headlight flasher and dimmer switch
44. Fuel transmitter
45. Back-up light
46. Stop lights, direction indicators and tail light
47. Number plate light
48. Trunk light

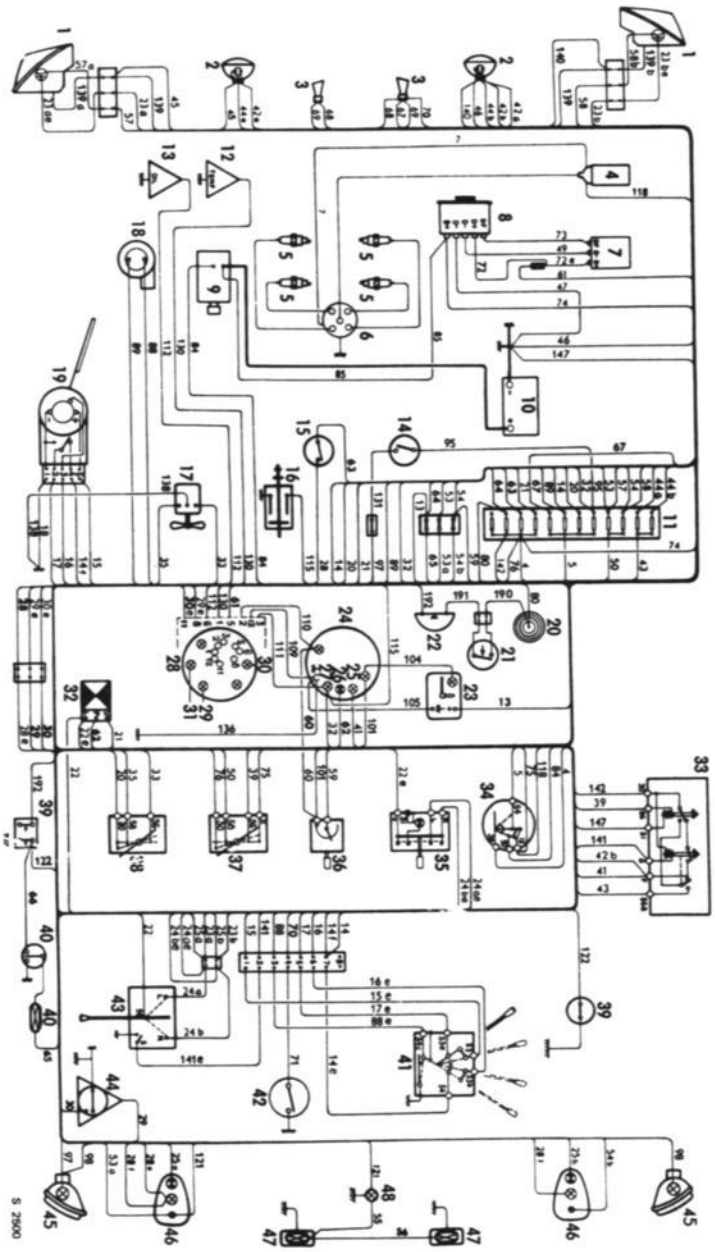

WIRING DIAGRAM SAAB SEDAN USA. MODEL 1970

cable numbers refer to table on the opposite page.

Wiring diagram Saab sedan USA model 1971

The range of the electrical system is shown by the wiring system on the next page. To simplify the identification. the wires have been covered with insulation of different shades, as follows:

Cable numbers

No.	Color	Area mm²	No.	Color	Area mm²	No.	Color	Area mm²
4	grey	1,5	39	yellow	0,75	74	grey	4,0
5	red	1,5	41	blue	0,75	75	red	1,0
7	green	1,5	42a	blue	1,5	76	grey	1,0
13	blue	0,75	42b	white	2,5	80	black	1,0
14	brown	1,0	43	yellow	2,5	84	yellow	1,5
14e	brown	1,0	44a	grey	1,5	85	grey	4,0
14f	brown	1,0	44b	yellow	1,5	88	black	0,75
15	red	1,0	45	black	1,5	88e	black	0,75
15e	red	1,0	46	black	2,5	89	brown	0,75
16	grey	1,0	47	black	4,0	95	white	1,5
16e	grey	1,0	49	black	1,0	97	white	1,5
17	blue	1,0	50	green	1,0	98	white	1,0
17e	blue	1,0	53	blue	0,75	101	green	0,75
18	black	1,0	53a	blue	0,75	104	green	0,75
20	white	1,0	54	green	0,75	105	black	0,75
21	red	1,0	54b	green	0,75	109	black	0,75
22	green	1,0	55	green	0,75	110	green	0,75
22e	green	1,0	56	black	0,75	111	red	0,75
23a	yellow	1,0	57	blue	0,75	112	blue	1,0
23ae	yellow	1,0	57a	blue	0,75	115	yellow	0,75
23b	white	1,0	58	green	0,75	118	white	1,0
23be	white	1,0	58b	green	0,75	121	green	0,75
24a	yellow	1,0	59	green	0,75	122	white	0,75
24ae	yellow	1,0	60	green	0,75	130	brown	1,0
24b	white	1,0	61	red	0,75	131	white	1,5
24be	white	1,0	62	grey	0,75	136	black	1,0
25a	blue	1,0	63	red	1,0	138	black	1,0
25b	grey	1,0	64	grey	0,75	139	black	1,5
28	red	1,0	65	red	0,75	139a	black	1,0
28e	red	1,0	66	white	0,75	139b	black	1,0
28f	red	0,75	67	red	1,5	140	black	1,5
29	grey	0,75	68	red	1,0	141	brown	0,75
29e	green	0,75	69	black	1,0	141e	brown	0,75
30	brown	0,75	70	black	1,5	142	grey	2,5
30e	brown	0,75	71	black	1,5	147	black	0,75
32	red	0,75	72	red	1,0	190	yellow	0,75
33	yellow	1,0	72e	red	1,0	191	grey	0,75
35	grey	1,0	73	yellow	1,0	192	black	0,75

Key to numbers in Fig.

1. Parking light and direction indicators
2. Headlights
3. Horn
4. Ignition coil
5. Spark plugs
6. Distributor
7. Voltage regulator
8. Alternator
9. Starter
10. Battery
11. Fuse box
12. Temperature transmitter
13. Oil pressure switch
14. Back-up light switch
15. Stop light switch
16. Brake warning contact
17. Heater fan motor
18. Windshield washer pump
19. Windshield wiper motor
20. Cigarette lighter
21. Contact for warning buzzer
22. Buzzer
23. Clock
24. Speedometer with odometer
25. High beam indicator light
26. Direction indicator repeater light
27. Brake warning light
28. Temperature and fuel gauges
29. Indicator light, fuel amount
30. Oil pressure warning light
31. Charge indicator light
32. Flasher unit
33. Dimmer relay
34. Ignition and starter switch
35. Hazard warning flasher switch
36. Instrument illumination rheostat
37. Headlight switch
38. Heater fan switch
39. Dome lamp switch
40. Dome lamp with switch
41. Switch for windshield wiper, and washer
42. Signal horn contact
43. Direction indicator switch with headlight flasher and dimmer switch
44. Fuel transmitter
45. Back-up light
46. Stop lights, direction indicators and tail light
47. Number plate light
48. Trunk light

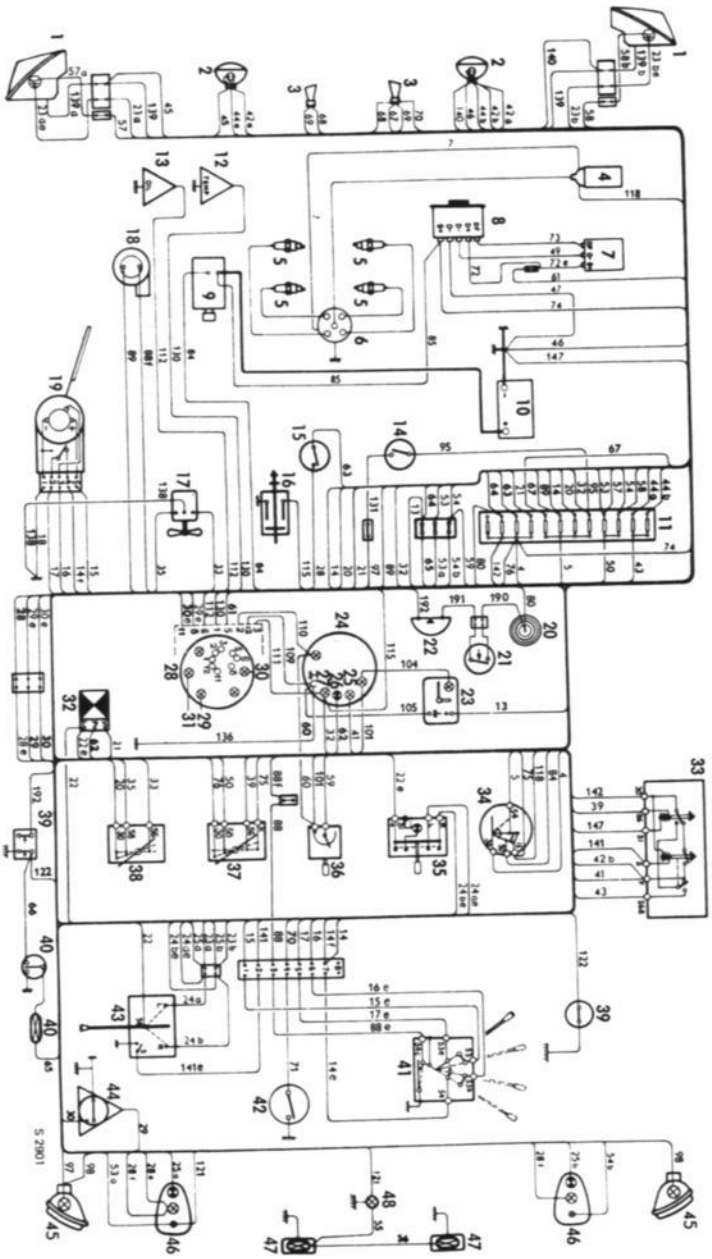

WIRING DIAGRAM SAAB SEDAN USA MODEL 1971

cable numbers refer to table on the opposite page.

Wiring diagram Monte Carlo L.H.D. model 1967

The range of the electrical system is shown by the wiring system on the next page. To simplify the identification, the wires have been covered with insulation of different shades, as follows:

Black	7, 7b, 18, 45, 46, 47, 49, 71, 80, 105, 106, 107, 108, 109, 123e, 124, 135, 138, 139, 140.
Red	5, 21, 28, 28e, 28f, 32, 39, 61, 63, 65, 67, 68, 72, 83, 86, 86e, 126, 129.
Green	16, 22, 50, 51, 52, 53, 54, 55, 56, 57, 58, 60, 82, 101, 102, 103, 104, 110, 119, 121, 133, 143.
Grey	4, 25b, 29, 35, 44a, 62a, 62b, 64, 69, 70, 74, 75, 85, 89, 113, 117, 142, 144.
White	20, 23b, 24b, 40, 42b, 66, 95, 97, 98, 118, 122, 122e, 128a, 131.
Yellow	17, 23a, 24a, 33, 43, 44b, 62b, 73, 81, 84, 99, 100, 100e, 112, 112e, 128b, 130.
Brown	14, 14c, 15, 30, 137, 141.
Blue	13, 25a, 41, 42a, 145.

KEY TO NUMBERS IN THE FIGURE.

1. Direction indicators and side lights
2. Headlights
3. Horn
4. Foglight and spotlight
5. Ignition coil
6. Spark plugs
7. Distributor
8. Voltage regulator
9. Alternator
10. Starter
11. Battery
12. Fuse box
13. Temperature meter
14. Oil gauge
15. Back-up light switch
16. Stop light switch
17. Heater fan motor
18. Windshield-washer pump
19. Wiper motor
20. Direction indicator repeater lights
21. Charge indicator light
22. Indicator light, oil pressure
23. High beam indicator light
24. Indicator light, fuel
25. Ignition and starter switch
26. Electric clock
27. Speedometer, odometer and trip meter
28. Temperature gauge
29. Fuel gauge
30. Tachometer
31. Flasher
32. Manoeuvre relay, light
33. Dimming relay
34. Cigarette lighter
35. Spotlight switch
36. Fog light switch
37. Headlight switch and instrument illumination rheostat
38. Heater fan switch
39. Windshield wiper and washer switch
40. Courtesy light switch
41. Courtesy light with switch
42. Horn button
43. Direction indicator switch with headlight flasher and dimmer switch
44. Fuel tank gauge
45. Back-up lights
46. Stop lights, direction indicators and tail lights
47. Number plate lights
48. Trunk light

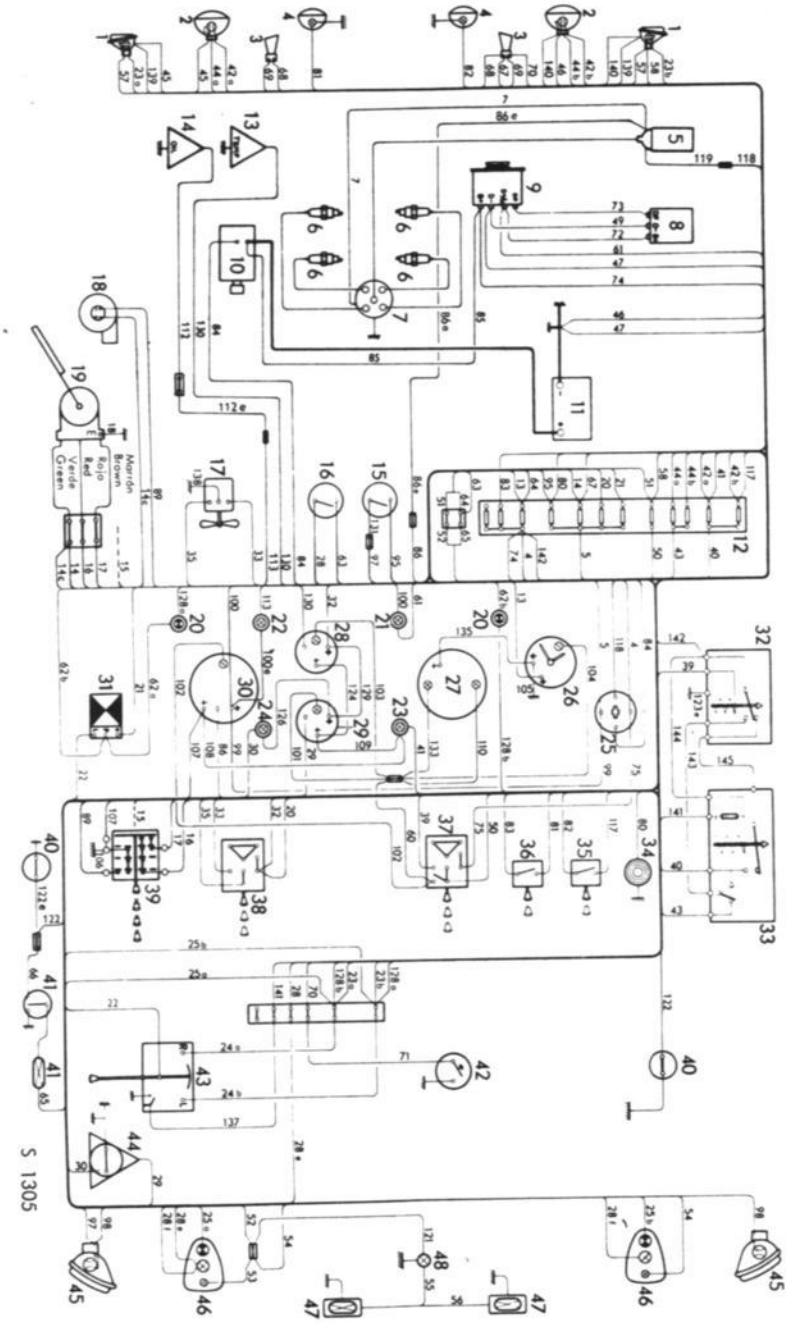

WIRING DIAGRAM MONTE CARLO L. H. D. MODEL 1967

cable numbers refer to table on the opposite page.

Wiring diagram Monte Carlo L.H.D. model 1968

The range of the electrical system is shown by the wiring system on the next page. To simplify the identification, the wires have been covered with insulation of different shades, as follows:

Black 7, 19, 23a, 45, 46, 47, 49, 71, 80, 88, 88e, 105, 107, 108, 109, 124, 135, 138, 139, 140.

Red 5, 21, 28, 28e, 28f, 32, 39, 61, 63, 65, 67, 68, 72, 72e, 83, 86, 86e, 111, 116, 126, 129.

Green 22, 50, 51, 52, 53, 54, 55, 56, 57, 58, 59, 60, 82, 101, 102, 103, 104, 110, 121, 133, 143.

Grey 4 16, 16e, 25b, 29, 35, 44a, 62a, 62b, 64, 69, 70, 74, 75, 85, 117, 142, 144.

White 20, 23b, 24b, 40, 42b, 66, 95, 97, 98, 118, 122, 122e, 128a, 131.

Yellow 24a, 33, 43, 44b, 73, 81, 84, 99, 100, 115, 128b.

Brown 14, 30, 89, 130, 137, 141.

Blue 13, 17, 17e, 25a, 41, 42a, 112, 145.

KEY TO NUMBERS IN THE FIGURE.

1. Direction indicators and side lights
2. Headlights
3. Horn
4. Foglight and spotlight
5. Ignition coil
6. Spark plugs
7. Distributor
8. Voltage regulator
9. Alternator
10. Starter
11. Battery
12. Fuse box
13. Temperature gauge, sending unit
14. Oil pressure switch
15. Back-up light switch
16. Stop lamp switch
17. Brake warning contact
18. Heater fan motor
19. Windshield-washer pump
20. Wiper motor
21. Direction indicator repeater light
22. Brake warning light
23. Charge indicator light
24. Indicator light, oil pressure
25. High beam indicator light
26. Indicator light, fuel
27. Ignition and starter switch
28. Electric clock
29. Speedometer, odometer and trip meter
30. Temperature gauge
31. Fuel gauge
32. Tachometer
33. Flasher
34. Manoeuvre relay, light
35. Dimmer relay
36. Cigarette lighter
37. Spotlight switch
38. Fog light switch
39. Headlight switch
40. Instrument illumination rheostat
41. Heater fan switch
42. Courtesy light switch
43. Courtesy light with switch
44. Switch for windshield wiper, -washer and signal horn
45. Direction indicator switch with headlight flasher and dimmer switch
46. Fuel tank gauge
47. Back-up lights
48. Stop lights, direction indicators and tail lights
49. Number plate light
50. Trunk light

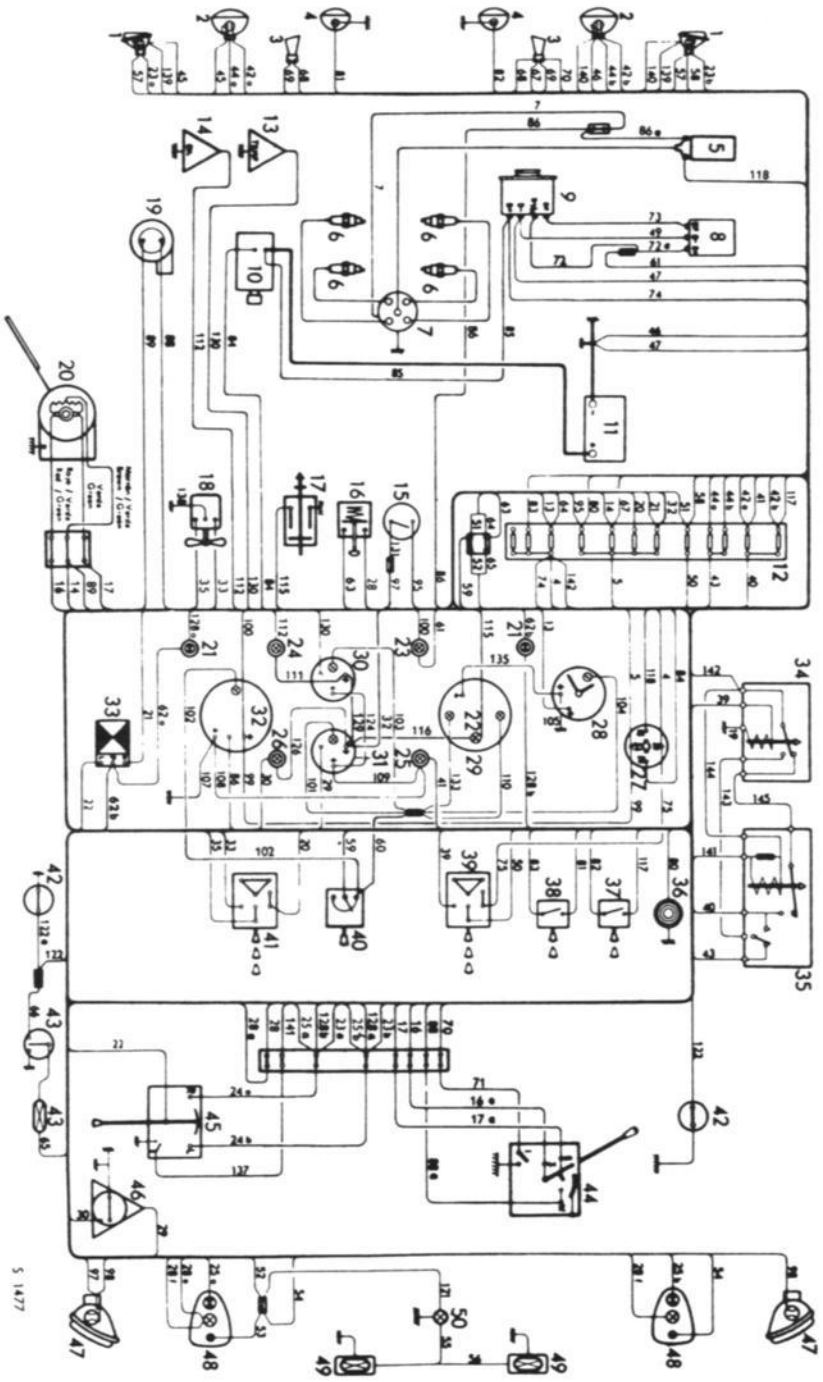

WIRING DIAGRAM MONTE CARLO L. H. D. MODEL 1968

cable numbers refer to table on the opposite page.

Wiring diagram Monte Carlo R.H.D. model 1967

The range of the electrical system is shown by the wiring system on the next page. To simplify the identification, the wires have been covered with insulation of different shades, as follows:

Black	7, 7b, 18, 45, 46, 47, 49, 71, 80, 105, 106, 107, 108, 109, 123e, 124, 135, 138, 139, 140.
Red	5, 21, 28, 28e, 28f, 32, 39, 61, 63, 65, 67, 68, 72, 83, 86, 86e, 126, 129.
Green	16, 22, 50, 51, 52, 53, 54, 55, 56, 57, 58, 60, 82, 101, 102, 103, 104, 110, 119, 121, 133, 143.
Grey	4, 25b, 25be, 29, 29e, 35, 44a, 62a, 64, 69, 70, 74, 75, 85, 89, 113, 117, 142, 144.
White	20, 23b, 24b, 40, 42b, 66, 95, 97, 98, 118, 122, 122e, 128a, 131.
Yellow	17, 23a, 24a, 33, 43, 44b, 62b, 73, 81, 84, 99, 100, 100e, 112, 112e, 128b, 130.
Brown	14, 14c, 15, 30, 30e, 137, 141.
Blue	13, 25a, 25ae, 41, 42a, 145.

KEY TO NUMBERS IN THE FIGURE.

1. Direction indicators and side lights
2. Headlights
3. Horn
4. Foglight and spotlight
5. Ignition coil
6. Spark plugs
7. Distributor
8. Voltage regulator
9. Alternator
10. Starter
11. Battery
12. Fuse box
13. Temperature meter
14. Oil gauge
15. Back-up light switch
16. Stop light switch
17. Heater fan motor
18. Windshield-washer pump
19. Wiper motor
20. Direction indicator repeater lights
21. Charge indicator light
22. Indicator light, oil pressure
23. High beam indicator light
24. Indicator light, fuel
25. Flasher
26. Tachometer
27. Temperature gauge
28. Fuel gauge
29. Speedometer, odometer and trip meter
30. Electric clock
31. Ignition and starter switch
32. Manoeuvre relay, light
33. Dimming relay
34. Spotlight switch
35. Headlight switch and instrument illumination rheostat
36. Fog light switch
37. Heater fan switch
38. Windshield wiper and washer switch
39. Cigarette lighter
40. Courtesy light switch
41. Courtesy light with switch
42. Horn button
43. Direction indicator switch with headlight flasher and dimmer switch
44. Fuel tank gauge
45. Back-up lights
46. Stop lights, direction indicators and tail lights
47. Number plate lights
48. Trunk light

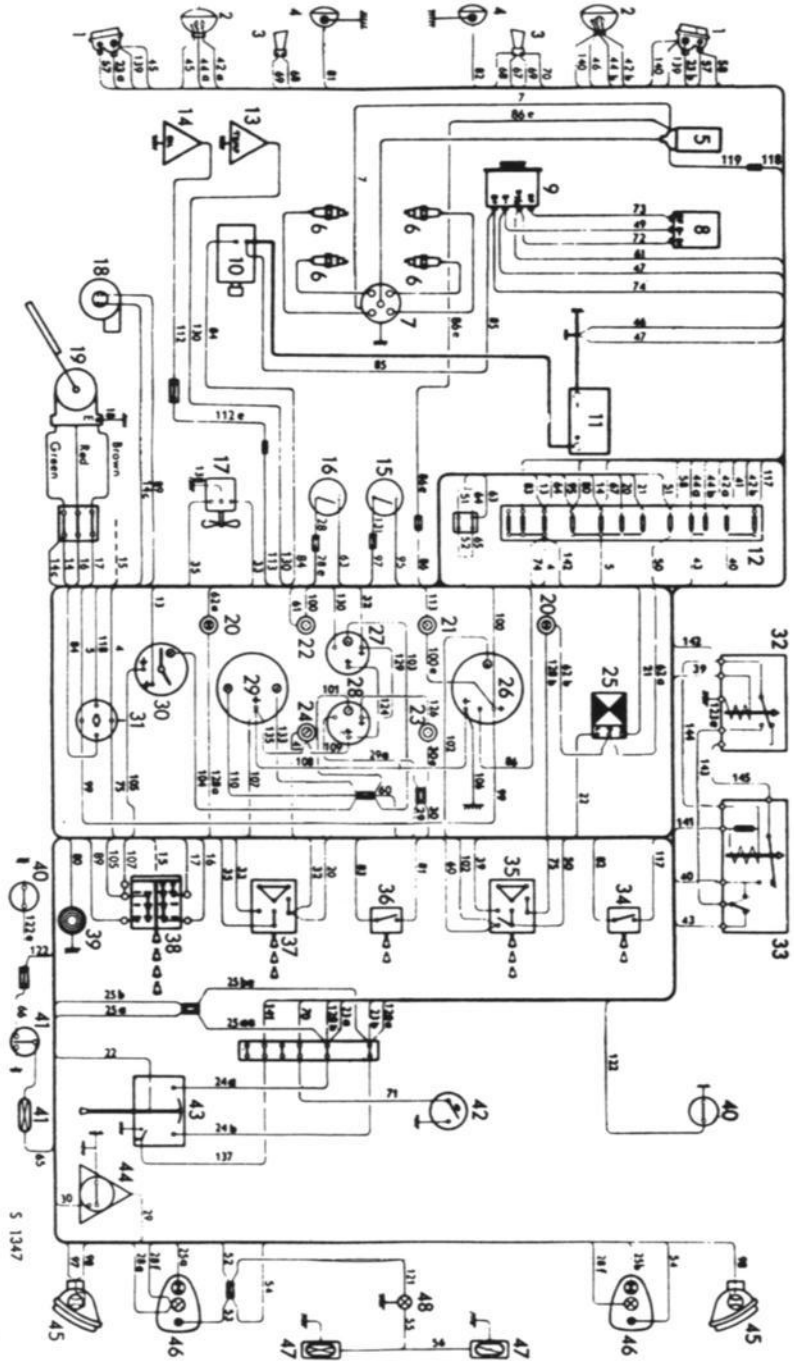

WIRING DIAGRAM MONTE CARLO R.H.D. MODEL 1967

Cable numbers refer to table on the opposite page.

Wiring diagram Monte Carlo USA model 1967

The range of the electrical system is shown by the wiring system on the next page. To simplify the identification, the wires have been covered with insulation of different shades, as follows:

Black 7, 7b, 18, 19, 45, 46, 47, 49, 71, 80, 105, 106, 107, 108, 109, 123e, 124, 135, 138, 139, 140.

Red 5, 21, 28, 28e, 28f, 32, 39, 61, 63, 65, 67, 68, 72, 83, 86, 86e, 126, 129.

Green 16, 22, 22e, 22f, 50, 51, 52, 53, 54, 55, 56, 57, 58, 60, 82, 101, 102, 103, 104, 110, 119, 121, 133, 146, 147.

Grey 4, 25b, 29, 35, 44a, 62a, 62b, 64, 69, 70, 74, 75, 85, 89, 113, 117, 142, 144.

White 20, 23b, 24b, 24be, 24bf, 40, 42b, 66, 95, 97, 98, 118, 122, 122e, 128a, 131.

Yellow 17, 23a, 24a, 24ae, 24af, 33, 43, 44b, 62b, 73, 81, 84, 99, 100, 100e, 112, 112e, 128b, 130.

Brown 14, 14c, 15, 30, 137, 141, 141e.

Blue 13, 25a, 41, 42a.

KEY TO NUMBERS IN THE FIGURE

1. Direction indicators and side lights
2. Headlights
3. Horn
4. Foglight and spotlight
5. Ignition coil
6. Spark plugs
7. Distributor
8. Voltage regulator
9. Alternator
10. Starter
11. Battery
12. Fuse box
13. Temperature meter
14. Oil gauge
15. Back-up light switch
16. Stop light switch
17. Heater fan motor
18. Windshield-washer pump
19. Wiper motor
20. Direction indicator repeater lights
21. Charge indicator light
22. Indicator light, oil pressure
23. High beam indicator light
24. Indicator light, fuel
25. Ignition and starter switch
26. Electric clock
27. Speedometer, odometer and trip meter
28. Temperature gauge
29. Fuel gauge
30. Tachometer
31. Flasher
32. Manoeuvre relay, light
33. Dimming relay
34. Dimming switch
35. Cigarette lighter
36. Spotlight switch
37. Fog light switch
38. Headlight switch and instrument illumination rheostat
39. Warning flasher switch
40. Heater fan switch
41. Windshield wiper and washer switch
42. Courtesy light switch
43. Courtesy light with switch
44. Horn button
45. Direction indicator switch
46. Fuel tank gauge
47. Back-up lights
48. Stop lights, direction indicators and tail lights
49. Number plate lights
50. Trunk light

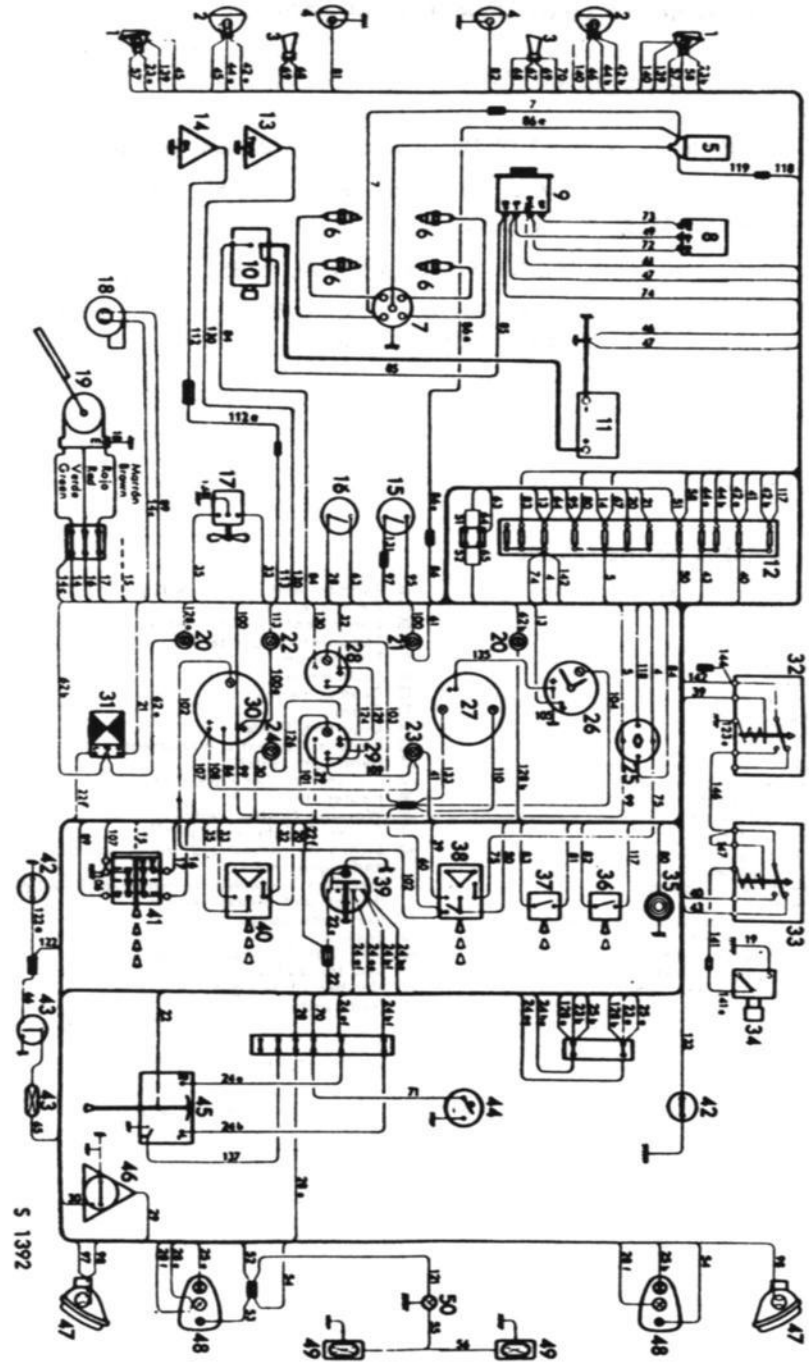

WIRING DIAGRAM MONTE CARLO USA MODEL 1967

Cable numbers refer to table on the opposite page

Wiring diagram De Luxe USA model 1968

The range of the electrical system is shown by the wiring system on the next page. To simplify the identification, the wires have been covered with insulation of different shades, as follows:

Black 7, 23a, 45, 46, 47, 49, 71, 80, 88, 88e, 105, 107, 108, 109, 124, 135, 138, 139, 140.

Red 5, 21, 28, 28e, 28f, 32, 39, 61, 63, 65, 67, 68, 72, 72e, 86, 86e, 111, 113, 116, 126, 129.

Green 22, 22e, 22f, 50, 51, 52, 53, 54, 55, 56, 57, 58, 59, 101, 102, 103, 104, 110, 121, 133.

Grey 4, 16, 16e, 25b, 29, 35, 44a, 62a, 62b, 64, 69, 70, 74, 75, 85.

White 20, 23b, 24b, 24be, 24bf, 40, 42b, 66, 95, 97, 98, 99, 118, 122, 122e, 128a, 131.

Yellow 24a, 24ae, 24af, 33, 43, 44b, 73, 84, 115, 128b.

Brown 14, 30, 89, 130, 137, 137c.

Blue 13, 17, 17e, 25a, 41, 42a, 112.

KEY TO NUMBERS IN THE FIGURE

1. Direction indicators and side lights
2. Headlights
3. Horn
4. Ignition coil
5. Spark plugs
6. Distributor
7. Voltage regulator
8. Alternator
9. Starter
10. Battery
11. Fuse box
12. Temperature gauge, sending unit
13. Oil pressure switch
14. Back-up light switch
15. Stop light switch
16. Brake warning contact
17. Heater fan motor
18. Windshield-washer pump
19. Wiper motor
20. Direction indicator repeater light
21. Brake warning light
22. Charge indicator light
23. Indicator light, oil pressure
24. High beam indicator light
25. Indicator light, fuel
26. Ignition and starter switch
27. Electric clock
28. Speedometer, odometer and trip meter
29. Temperature gauge
30. Fuel gauge
31. Tachometer
32. Dimmer switch
33. Flasher
34. Cigarette lighter
35. Switches for extra equipment
36. Headlight switch
37. Instrument illumination rheostat
38. Heater fan switch
39. Warning flasher switch
41. Courtesy light with switch
42. Switch for windshield wiper, -washer and signal horn
43. Direction indicator switch with headlight flasher and dimmer switch
44. Fuel tank gauge
45. Back-up lights
46. Stop lights, direction indicators and tail lights
47. Number plate light
48. Trunk light

TEMP - BROWN
CH. ~~TEMP~~ OIL - BLUE
LH PARK - GREEN, BLACK, DBL BLK
from left
LF HORN - RED, GREY
STARTER - YELLOW

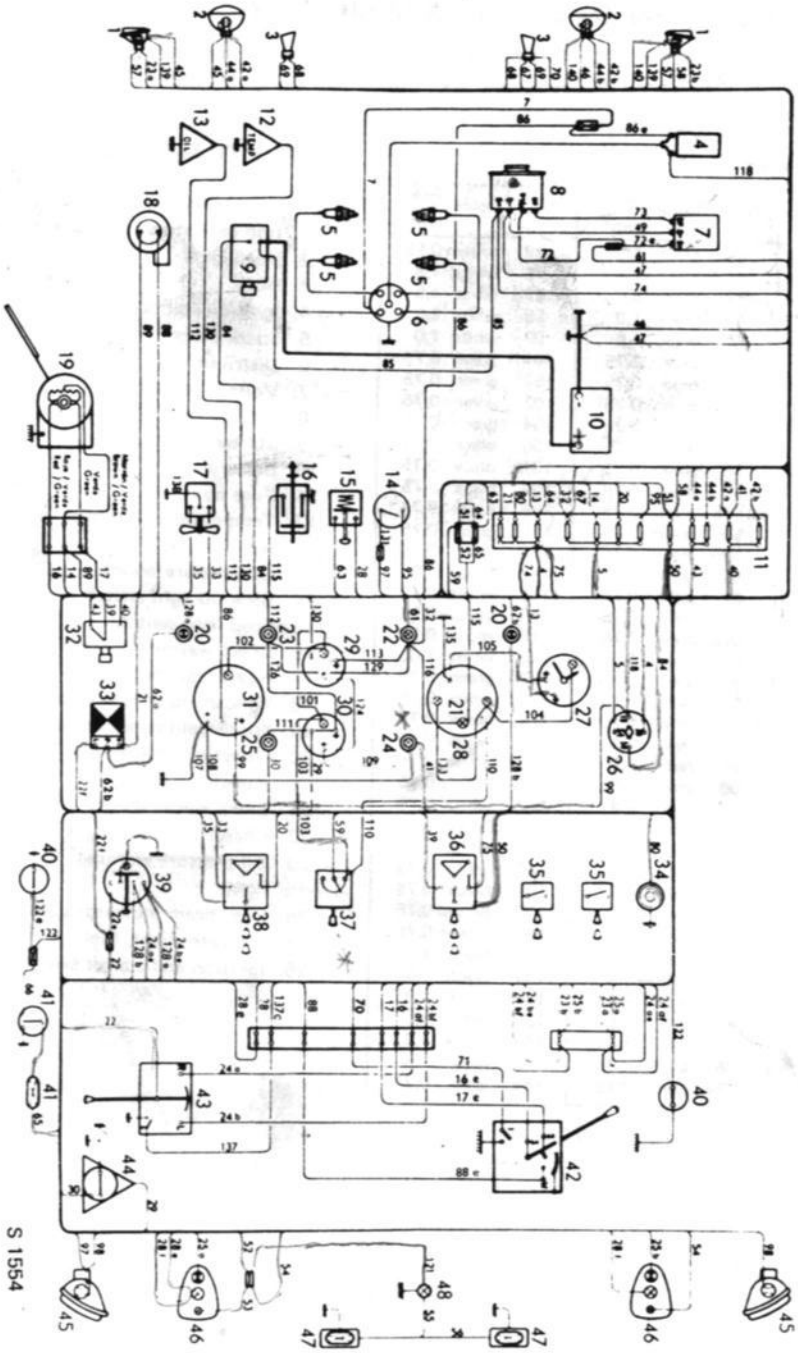

WIRING DIAGRAM DE LUXE U.S.A. MODEL 1968

Cable numbers refer to table on the opposite page

Wiring diagram De Luxe USA model 1969

The range of the electrical system is shown by the wiring system on the next page. To simplify the identification, the wires have been covered with insulation of different shades, as follows:

Cable numbers

No.	Color	Area mm2	No.	Color	Area mm2	No.	Color	Area mm2
4	grey	1,5	45	black	1,5	89	brown	0,75
5	red	1,5	46	black	2,5	95	white	1,5
7	black	1,5	47	black	4,0	97	white	1,5
13	blue	0,75	49	black	1,0	98	white	1,0
14	brown	1,0	50	green	1,0	99	white	1,0
16	grey	1,0	53	blue	0,75	101	green	0,75
16e	grey	1,0	53a	blue	0,75	102	green	0,75
17	blue	1,0	54	green	0,75	103	green	0,75
17e	blue	1,0	54b	green	0,75	104	green	0,75
20	white	1,0	55	green	0,75	105	black	0,75
21	red	1,0	56	green	0,75	107	black	0,75
22	green	1,0	57	blue	0,75	108	black	0,75
22e	green	1,0	57a	blue	0,75	109	black	0,75
23a	yellow	1,0	58	green	0,75	110	green	0,75
23ae	yellow	1,0	58b	green	0,75	111	red	0,75
23b	white	1,0	59	green	0,75	112	blue	1,0
23be	white	1,0	61	red	0,75	113	white	0,75
24a	yellow	0,75	62a	grey	0,75	115	yellow	0,75
24ae	yellow	0,75	62b	grey	0,75	116	red	0,75
24af	yellow	1,0	63	red	1,0	118	white	1,0
24b	white	0,75	64	grey	0,75	121	green	0,75
24be	white	0,75	65	red	0,75	122	white	0,75
24bf	white	1,0	66	white	0,75	124	black	0,75
25a	blue	1,0	67	red	1,5	126	white	0,75
25b	grey	1,0	68	red	1,0	128a	white	0,75
28	red	1,0	69	black	1,0	128b	yellow	0,75
28e	red	1,0	70	black	1,5	129	white	0,75
28f	red	0,75	71	black	1,5	130	brown	1,0
29	grey	0,75	72	red	1,0	131	white	1,5
30	brown	0,75	72e	red	1,0	133	green	0,75
32	red	0,75	73	yellow	1,0	135	black	0,75
33	yellow	1,0	74	grey	4,0	137	brown	0,75
35	grey	1,0	75	grey	2,5	137c	brown	0,75
39	red	2,5	80	black	1,5	138	black	1,0
41	blue	0,75	84	yellow	1,5	139	black	1,0
42a	blue	1,5	85	grey	4,0	139a	black	1,0
42b	white	2,5	86	red	1,0	139b	black	1,0
43	yellow	2,5	86e	red	1,0	140	black	1,5
44a	grey	1,5	88	black	0,75	142	grey	1,5
44b	yellow	1,5	88e	black	0,75	144	grey	0,75

KEY TO NUMBERS IN THE FIGURE

1. Parking light and direction indicators
2. Headlights
3. Horn
4. Ignition coil
5. Spark plugs
6. Distributor
7. Voltage regulator
8. Alternator
9. Starter
10. Battery
11. Fuse box
12. Temperature transmitter
13. Oil pressure switch
14. Back-up light switch
15. Stop light switch
16. Brake warning contact
17. Heater fan motor
18. Windshield washer pump
19. Windshield wiper motor
20. Direction indicator repeater light
21. Brake warning light
22. Charge indicator light
23. Oil pressure warning light
24. High beam indicator light
25. Indicator light, fuel
26. Ignition and starter switch
27. Electric clock
28. Speedometer, odometer and trip meter
29. Temperature gauge
30. Fuel gauge
31. Tachometer
32. Flasher unit
33. Dimmer relay
34. Cigarette lighter
35. Switches for extra equipment
36. Headlight switch
37. Instrument illumination rheostat
38. Heater fan switch
39. Warning flasher switch
40. Courtesy light switch
41. Courtesy light with switch
42. Switch for windshield wiper, -washer and signal horn
43. Direction indicator switch with headlight flasher and dimmer switch
44. Fuel transmitter
45. Back-up lights
46. Stop lights, direction indicators and tail lights
47. Number plate light
48. Trunk light

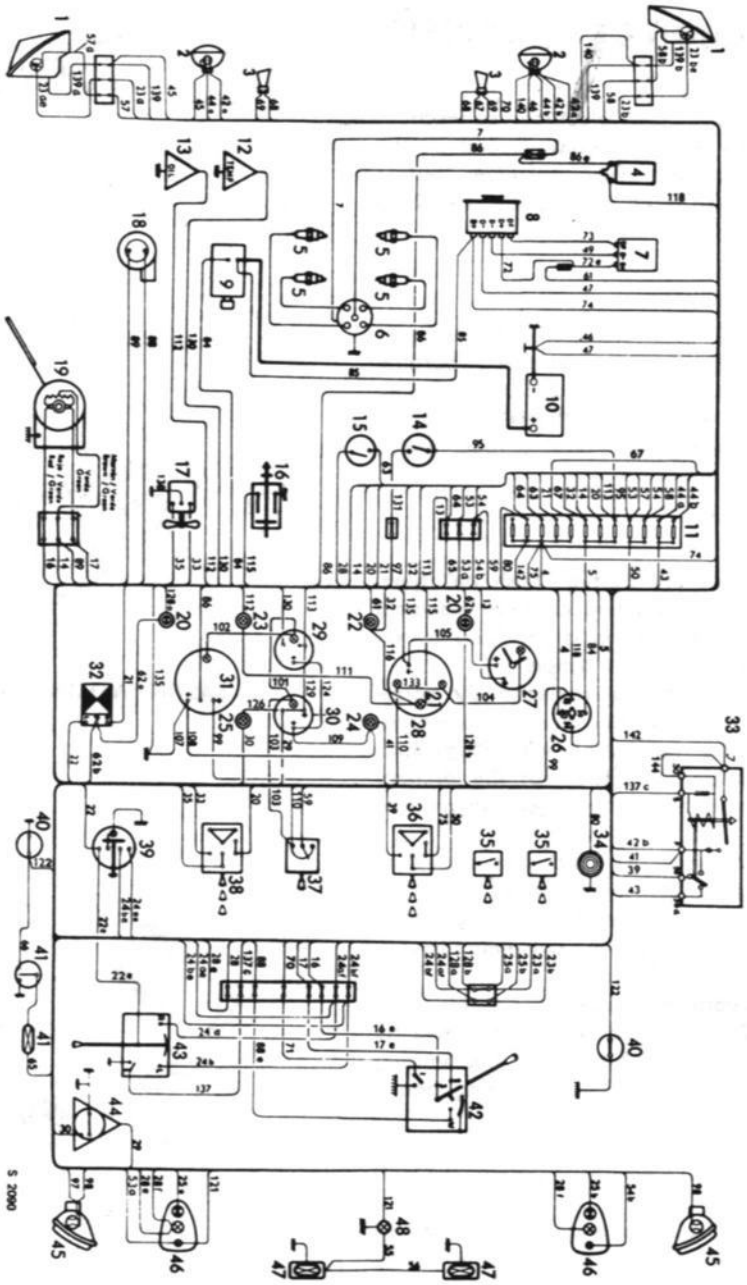

WIRING DIAGRAM DE LUXE USA MODEL 1969

Cable numbers refer to table on the opposite page

REPAIR, CONNECTION OF ACCESSORIES

General

The use of solder for producing electrical connections has been superseded by AMP-terminals crimped on the wires. Apart from ordinary ring tongue terminals, certain automotive types are also used to provide simplified electrical assembly.

Saab 95, 96 and Sport

The wires are to a large extent connected to the components by Faston receptacles. To provide separable connections, Fastin-Faston harness connectors are used. A larger type of them is fitted to headlights and flasher unit. For permanent connection, pre-insulated splice connectors are used.

Description

Faston connections are of the "push on" type. Two rolled springs provide high and constant electrical contact over the tab. Detent action is provided by an independently sprung ramp-shaped dimple.

When repairing, these should be replaced by corresponding pre-insulated parts. For connecting accessories, the new wires should be terminated with Piggy-Back receptacles, which provide male tabs for the primary receptacles. The Piggy-Back receptacles are then fitted to the primary tabs.

Fastin-Faston harness connectors consist of receptacles and tabs featuring small locking lances to prevent inadvertent retraction from the housings. Both units provide positive insulation for the completed assembly.

If, exceptionally, a receptacle has to be retracted from the housing, a 1/16" (2 mm) drill or steel rod should be inserted into the track on the front side of the housing to disengage the locking lance. When inserting again, check correct angle of lance.

When repair of harness connector or part thereof is required, replace by pre-insulated Faston receptacles and connectors.

A larger type of the receptacles and a corresponding housing is fitted to headlights and flashing relay. When repairing, replace by corresponding pre-insulated receptacles.

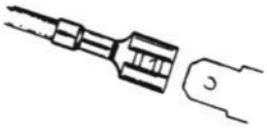

FASTON CONNECTION

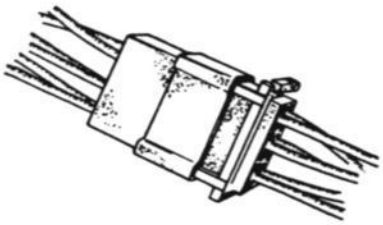

FASTIN-FASTON HARNESS CONNECTOR

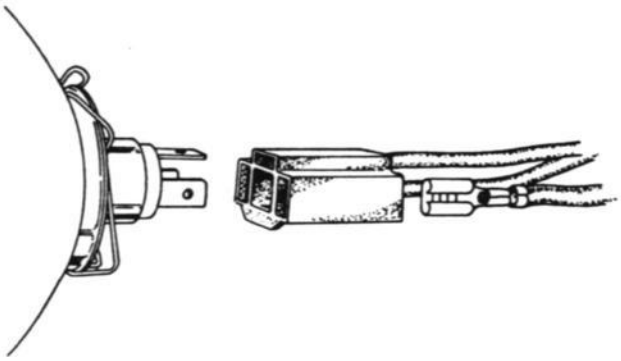

FASTIN-FASTON HEADLIGHT CONNECTOR

Service assembly

The primary production types are not advisable for repair use and accessory connection. Instead, pre-insulated terminals, splices, Faston receptacles and connectors should be used.

Pre-insulated terminals, type Plasti-Grip, are made from high-conductivity copper, electro-tinned for corrosion resistance. Barrel of terminal is serrated so that under crimping pressure the strands of wire "flow" into these serrations making a connection of great tensile strength. Bell mouth opening assures easy wire insertion.

They have a vinyl insulation sleeve withstanding ordinary oils, gasoline and corrosive agents. This extends from the back of the barrel to provide a support for the wire.

The insulation sleeve is color-coded by wire size, in accordance with the table shown below, to facilitate selection and eliminate errors during installation.

Wire Size Range mm²	Color-Coding
0.5—1.5	Red
1.5—2.5	Blue
3—6	Yellow

Pre-insulated splices, type Plasti-Grip, incorporate the same design features as terminals. A wire stop in the center of the splice facilitates the proper placement of wires.

Pre-insulated Faston receptacles, type PDG, are made of brass, electro-tinned for corrosion resistance. The insulation sleeve is bonded to a special sleeve providing a firm support to the wire insulation.

A special repair tool, Super Champ, is designed for the crimping operation and wire preparation. The correct placement of the wire crimp and insulation support crimp is shown below.

Terminals and tool or complete service kits are available through local AMP-distributors.

Uninsulated cable terminals

The in the production used uninsulated cable terminals can now also be ordered as spare parts, see spare parts catalogue. This type of terminals must however, when mounted, be insulated with PVC-hose or similar.

Special pliers for contact crimping on this type of terminals are available, see group 1.

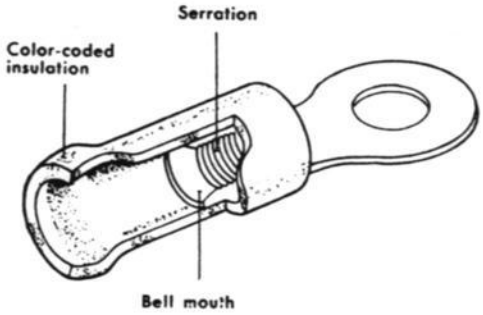

PRE-INSULATED TERMINAL

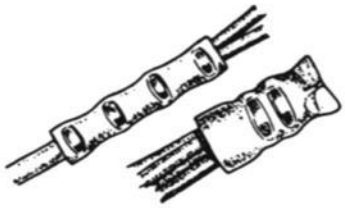

PRE-INSULATED SPLICES

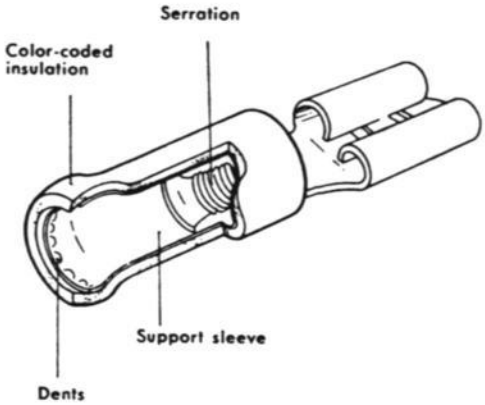

PRE-INSULATED FASTON RECEPTACLE

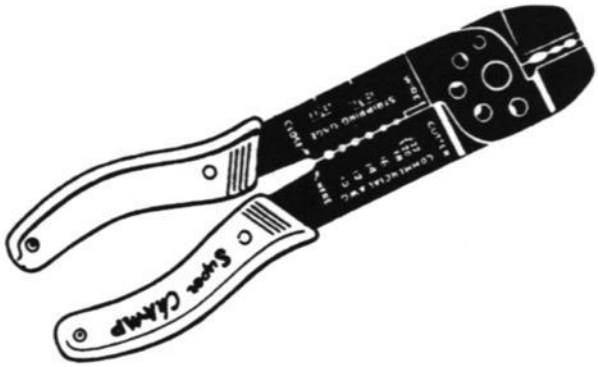

REPAIR TOOL

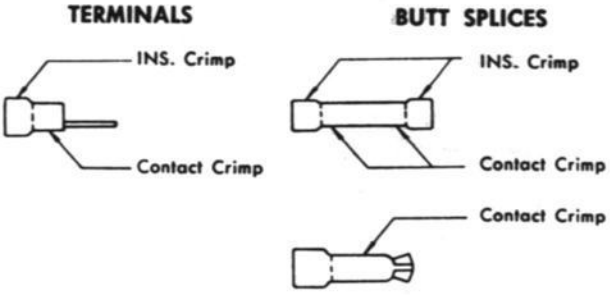

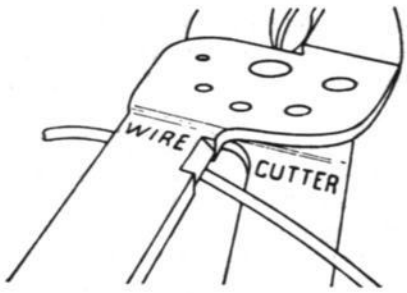

WIRE CUTTING

Wire cutting

1. Place wire in "Wire Cutter" section of handles.
2. Close handles all the way.

Wire stripping

1. Place wire in proper section of tool.
2. Close handles and rotate tool back and forth.
3. Open tool slightly and pull forward.
4. Check that the strands are undamaged.

Crimping procedure

1. Choose terminal to match the wire area.
2. Place terminal in jaws with matching color.
3. Insert stripped wire into terminal barrel.
4. Close handles all the way.
5. Make insulation support crimp in same way.

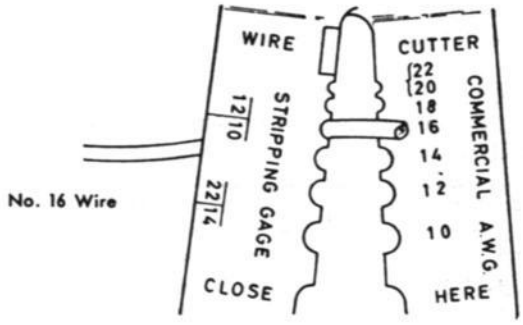

WIRE STRIPPING

Inspection

1. Check appearance of crimps.
2. Pull the wire.

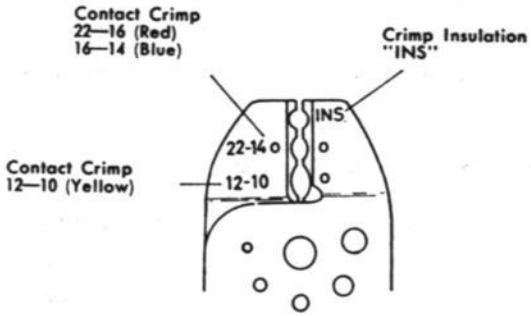

CRIMPING JAWS

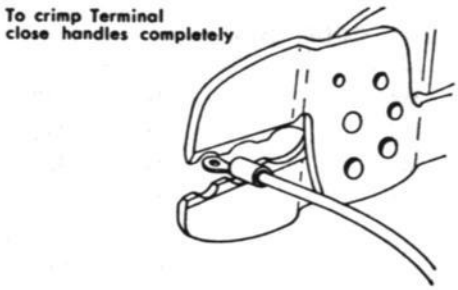

CRIMPING PROCEDURE

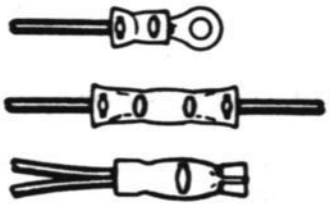

APPEARANCE OF CORRECTLY CRIMPED TERMINAL AND SPLICES

Connector parts

Item No.	Screw size	Description	Part. No. (Saab)	AMP Cat. No.	AMP U.S. Cat. No.
AREA: 0.5—1.5 mm² CODE: RED					
1	M4	Terminal lug	715521	34148	34148
2	M5	Terminal lug	712122	130014	34149
3		Compression splice	715520	34070	34070
4		Quick connector	782960	42599	42599
AREA: 1.5—2.5 mm² CODE: BLUE					
5	M4	Terminal lug	715523	34160	34160
6	M5	Terminal lug	711788	130102	34161
7	M6	Terminal lug	782961	34162	34162
8	M5	Terminal fork	715562	160171	34167
9		Compression splice	715514	34071	34071
10		Quick connector	782962	42332	42332
11		Quick connector, lights	782963	160326	160326
12		Quick branch connector	782964	160353	160353
13		Douglas plug	782965	160214	324225
AREA: 3—6 mm² CODE: YELLOW					
14	M5	Terminal lug	715565	160292	34854
15	M6	Terminal lug	782966	165035	34855
16	M8	Terminal lug	782967	160296	34856
7		Compression splice	715563	34072	34072
18		Quick connector	782968	160314	42844
OTHER CONNECTOR ACCESSORIES					
19		Connector socket, lights	715502	480100	480100
20		Socket splice	782969	36840	36840
21		Flat prong for quick connector	782970	140598	140598
22		Crimping pliers	784093	47100	47100
				Franz Kirsten cat. No.	
23		Socket strip for quick connectors, 6-pole, divisible	782971	226620	
24		Socket for quick connectors, 1×2 pole	782972	223120	

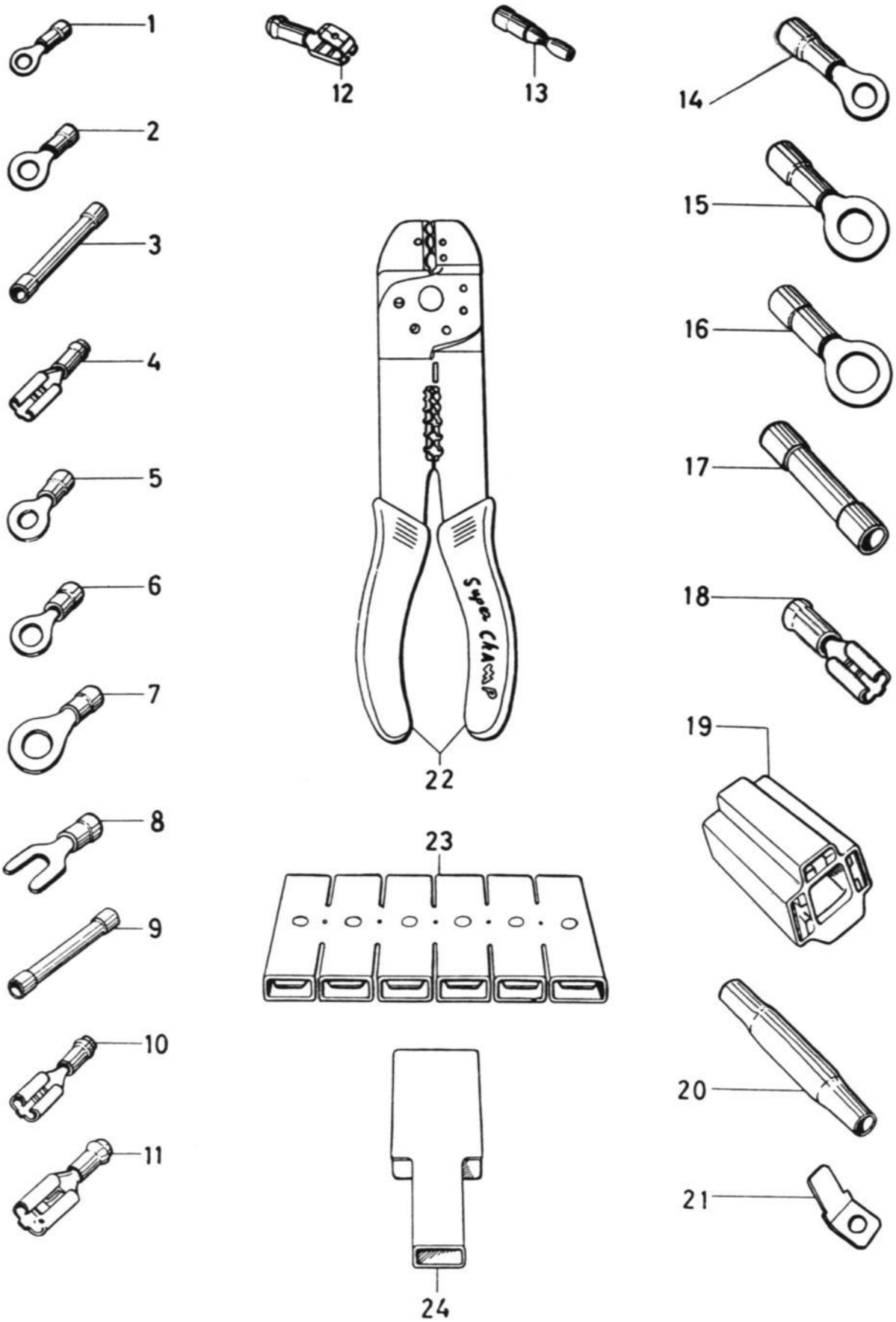
1
2
3
4
5
6
7
8
9
10
11
12
13
14
15
16
17
18
19
20
21
22
23
24

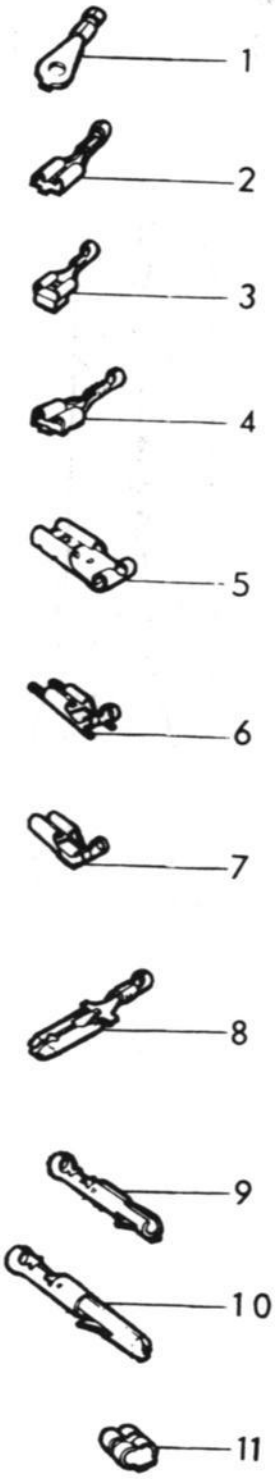

S 2375

Uninsulated cable terminals

Pos. No.	Bolt dim.	Designation	Spare part No.	Area
1	M4	Cable terminal, ring	791924	0,75–2,5 mm^2
1	M5	Cable terminal, ring	791925	0,75–2,5 mm^2
1	M5	Cable terminal, ring	791929	3,0 –6,0 mm^2
1	M6	Cable terminal, ring	791930	3,0 –6,0 mm^2
1	M8	Cable terminal, ring	791931	3,0 –6,0 mm^2
2		Cable terminal, fast-on	782501	0,5 –1,0 mm^2
2		Cable terminal, fast-on	782502	1,0 –2,5 mm^2
2		Cable terminal, fast-on	782503	4,0 –6,0 mm^2
3		Cable terminal, fast-on, branch	850328	1,0 –2,5 mm^2
4		Cable terminal, fast-on, bulb connector	782508	1,0 –3,0 mm^2
4		Cable terminal, multi-way	782505	0,75–2,0 mm^2
4		Cable terminal	782504	0,75–2,0 mm^2
5		Cable terminal, angular connection	719671	0,75–3,5 mm^2
6		Cable terminal, angular connection, lamp	800887	1,0 –2,5 mm^2
7		Cable terminal, angular, connection, lamp	800888	2,5 –4,0 mm^2
8		Cable terminal	782506	0,75–2,5 mm^2
8		Cable terminal	782507	0,75–2,0 mm^2
9		Cable terminal, sleeve	850315	0,5 –1,0 mm^2
9		Cable terminal, sleeve	850317	1,0 –2,5 mm^2
10		Cable terminal, peg	850316	0,5 –1,0 mm^2
10		Cable terminal, peg	850318	1,0 –2,5 mm^2
11		Cable terminal, end sleeve	715517	0,75–1,5 mm^2

CONTENTS

CLUTCH

General

The clutch is a single dry-plate type, comprising clutch disc, pressure-plate assembly and release bearing. The clutch is of the make Fichtel & Sachs.

The clutch plate consists of a resilient steel disc attached to a splined hub sliding on the clutch shaft. The clutch facings are riveted to both faces of the disc.

The pressure-plate assembly, which consits of the clutch cover and a cast pressure plate under pressure from spiral springs, is attached to the flywheel by means of bolts. The coil springs are kept in place by guides on the pressure plate and the clutch cover. Three clutch release levers are carried on struts and riveted to the clutch cover. The pressure-plate assembly is held together by the three clutch levers, which are secured by lugs on the struts. A spring-loaded steel disc, against which the release bearing is pressed when declutching, rests on the inner ends of the clutch levers.

The release bearing comprises a ball bearing held in a bearing housing, which is retained in the clutch fork by springs. A graphite ring or teflon coating on the ball bearing presses against the release plate when declutching. NOTE! When replacing the release bearing, you must if the bearing has Teflon coating see to it that the release plate is surface ground and not Teflon coated. The power is transmitted from the flyheel via the clutch cover and pressure plate to the clutch disc, and from there to the clutch shaft. One end of the clutch shaft is carried in a self-lubricating bearing in the crankshaft, and the other in a needle bearing in the gear box primary shaft. In the middle of the clutch shaft is a ball bearing with radial clearance in the clutch cover but locked axially by means of retaining rings. Axial guiding of the clutch shaft is provided for by this bearing. The pressure plate is pressed against the clutch disc by the coil springs, and is when declutching moved away from the flywheel by the three clutch levers. The release bearing is supported by the clutch fork which is attached to the vertical reelase shaft carried in the gearbox cover. The clutch operation is hydraulic. It comprises a master cylinder that is actuated by the clutch pedal. A hose connects the master cylinder to a slave cylinder which influences the clutch lever and release bearing.

TRANSMISSION

The transmission for the SAAB V4 is designed for front-wheel drive and arranged so that all shafts with their gears, free-wheel, differential and inner universal joint form a complete unit.
The SAAB V4 is equipped with 4-speed transmission.
The transmission has synchromesh for all forward gears, whereas the reverse gear comprises a sliding gearwheel.
The transmission train comprises an input clutch shaft, freewheel, primary shaft, countershaft, pinion shaft, differential and inner universal joints. The shafts are carried in ball bearings in the gearbox cover. The unit is connected to the engine by means of a clutch housing of light alloy, which also encases the differential. All gearwheels, exept the reverse gearwheel, are helical cut and in constant mesh with one another.
Shaft-borne gears are either carried on needle bearings or directly splined.
Shaft-borne gears are either carried on needle bearings or directly splined.
The transmission has synchronizers on both the primary shaft and the countershaft.
Gear-changing movements are transmitted from the steering column gear-shift lever to three shift forks. These shift forks are able to slide on their shafts and are locked in their respective gear positions by spring-loaded poppet balls, which fit into recesses made for this purpose on the shafts.
In addition, arrangements are provided which make it impossible to engage two gears simultaneously.

The working of the transmission is shown by the explanatory sketch.
In 1st gear, power is transmitted from the primary shaft to the counter shaft via an intermediate gear behind the freewheel. The 1st speed gear, which is carried on the countershaft, is locked to the shaft by a sliding sleeve. The power is then transmitted to the 3rd speed gear, which is borne on the primary shaft, and thence to the 3rd gear on the pinion shaft.
In 2nd gear, power is transmitted to the pinion shaft in the same way as when driving in 1st gear, except that the engagement sleeve now locks the 2nd speed gear, instead of the 1st, to the countershaft.
The power is then transmitted to the 4th speed gear on the main shaft and thence to the 4th gear on the pinion shaft.
In 3rd and 4th gears, power is transmitted from the primary shaft to the 3rd or 4th speed gear, as applicable, which is then locked to the primary shaft by means of a sliding sleeve. In reverse, power is transmitted from the primary shaft to the countershaft by way of the previously mentioned intermediate gear behind the freewheel. The reverse gear, splined to and sliding on the countershaft, meshes directly with the 3rd gear on the pinion shaft, thus turning the latter, together with the gears, in the reverse direction.

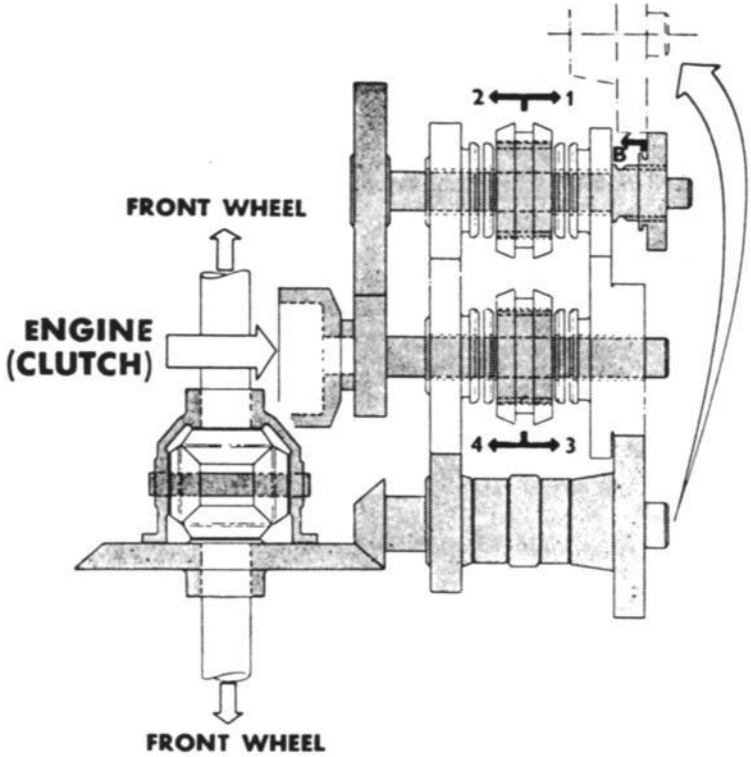

DIAGRAMMATIC ARRANGEMENT OF TRANSMISSION

Synchromesh

The synchronizer unit, which is illustrated in the figure belowe, function as described in the following:

When the synchronizer sleeve is made to mesh with, for instance, the dog ring on the 3rd speed gear, it pushes

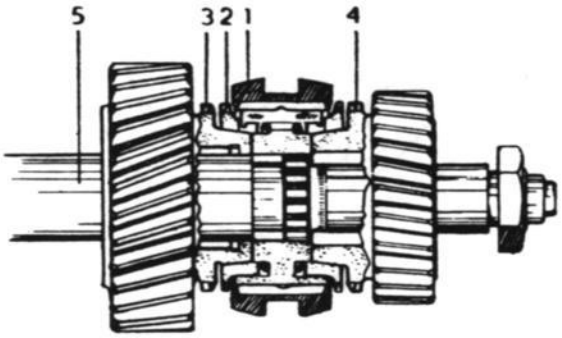

SYNCHRONIZER UNIT

1. **Synchronizer sleeve**
2. **Bronze blocking ring**
3. **Dog ring, 3rd speed gear**
4. **Dog ring, 2nd speed gear**
5. **Primary shaft**

in front of it an internally tapered bronze ring. This ring has external teeth corresponding to those of the gear dog ring. The bronze ring is able to change its position in relation to the sleeve by half a tooth space, and it also rotates at the same speed as the primary shaft. If the speed of the 3rd speed gear differs from that of the primary shaft at the moment when engagement should commence, the teeth on the bronze ring will move inte the way of the internal teeth on the sleeve, thus preventing the sleeve from moving in the direction of the 3rd speed gear. The internal taper of the bronze ring is then forced over the external 3rd gear taper and the friction will cause the gear and sleeve to rotate at the same speed. The path is thus opened for the sleeve, enabling the synchronizer sleeve teeth to engage the teeth of the dog ring on the 3rd speed gear.

Freewheel

The freewheel transmits the power from the clutch shaft to the transmission primary shaft. The freewheel hub, which is splined to the clutch shaft, has six roller seats each containing a roller. Each of these rollers is individually spring-loaded by a coil spring, which constantly endeavours to press the roller into the curve-shaped roller seat. The freewheel hub is surrounded by a cylindrical sleeve, which is an integral part of the primary shaft — see fig. As from transmission No. F 114 860, the freewheel has 10 rollers with 2 springs for each roller. Complete freewheels of the old and new versions are fully interchangeable.

The clutch shaft is connected to the engine crankshaft, and when the engine is driving the car the freewheel engages, being caused to do so because the freewheel hub tends to rotate faster than the primary shaft. The rollers are then forced up onto the curve-shaped roller seats in the freewheel hub.

When the rollers are thus held between the freewheel hub and the sleeve, the primary shaft is forced to rotate at the same speed as the clutch shaft, with which it is thus virtually united. If, on the other hand, the primary shaft tends to rotate faster than the clutch shaft, as may occur when running downhill with the engine idling, for example, the rollers are released, i.e. they are carried back to their curve-shaped seats by the freewheel sleeve. Consequently, the sleeve — the primary shaft — is able to rotate faster than the clutch shaft.

The freewheel is equipped with a blocking device by means of which it can be completely locked.

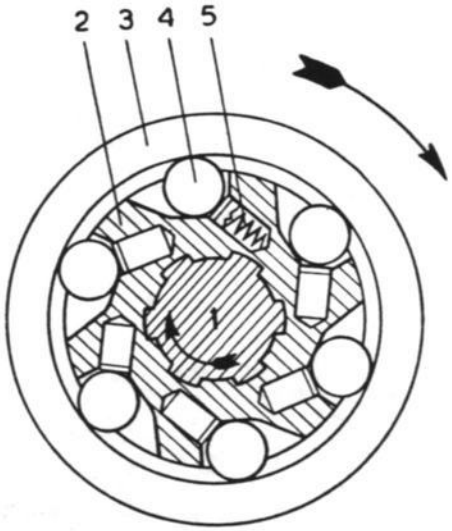

DIAGRAMMATIC ARRANGEMENT OF FREEWHEEL

1. Clutch shaft
2. Freewheel hub
3. Freewheel sleeve
4. Roller
5. Coil spring

Differential and speedometer drive

The speedometer drive is taken from the transmission pinion shaft, being transmitted by way of a worm gear to the connection for the speedometer cable.

The differential comprises two differential gears and two front drive shaft gears, one for each front drive shaft. The differential and front drive shaft gears have plain bevel teeth. The shaft gears are splined on stubs, through which they are connected with inner universal joints and inner drive shafts. The ring gear, to which the pinion shaft transmits the transmission torque, is bolted to the differential case.

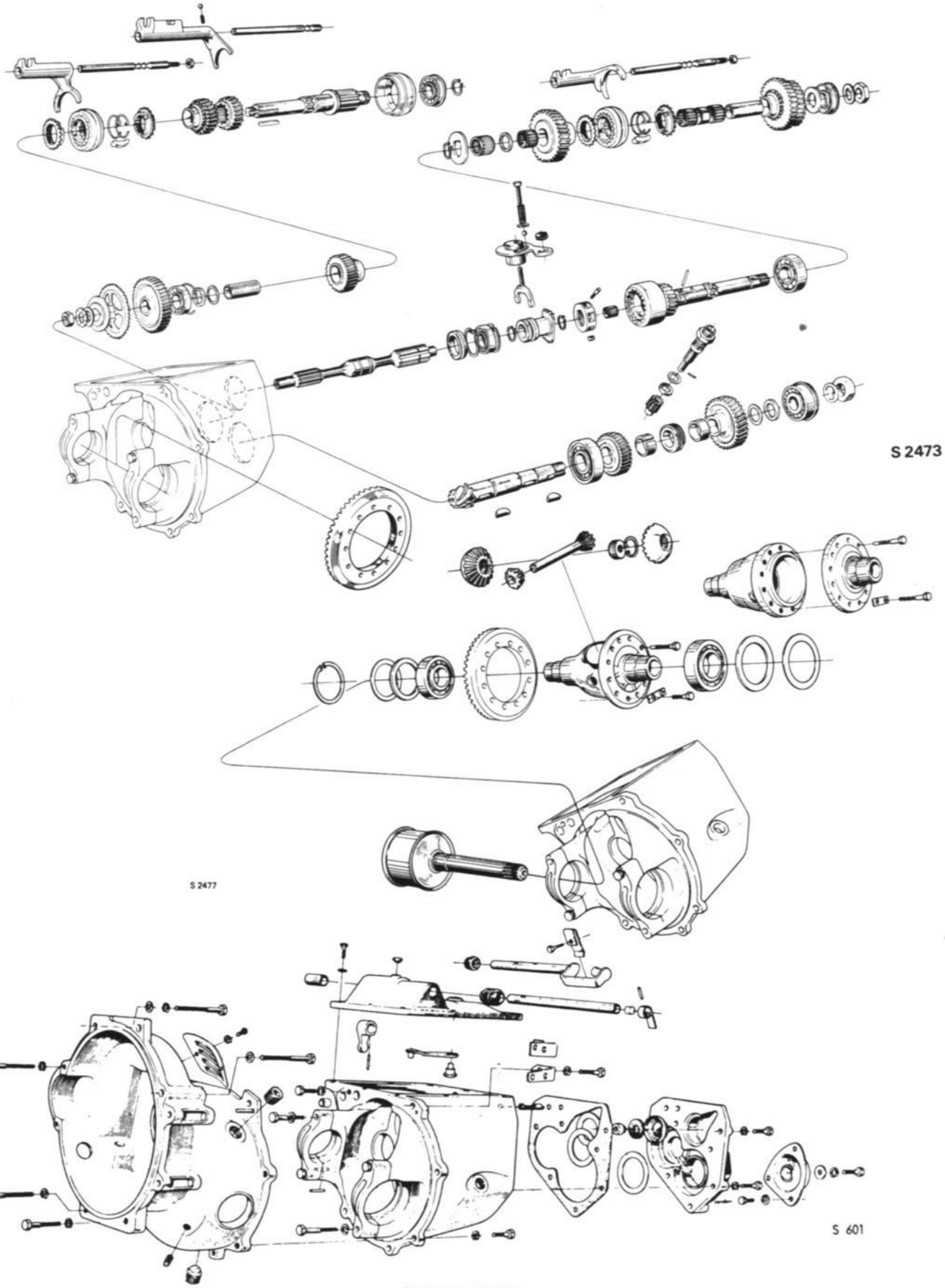

TRANSMISSION

CLUTCH

Removal of clutch

1. Lift the engine out of the car — see Section 201.
2. Slacken successively and back off the six bolts holding the pressure-plate assembly to the flywheel.
3. Remove the pressure-plate assy, and the clutch disc.

Installation of clutch

1. Insert the clutch disc, and refit the pressure-plate assembly in the flywheel.
2. Center the clutch disc with the arbor, tool No. 784064, which fits into the clutch-disc bearing in the crankshaft end.
3. Tighten gradually the six retaining bolts of the clutch.
4. Install the engine as described in Section 201.

Disassembly

Before disassembling the pressure-plate assembly, mark all the parts in order to ensure reassembly in the same relative positions. This is important in view of clutch balance.

1. Lift the three retaining springs, and remove the release plate.
2. Compress the clutch springs completely in a press. See fig.

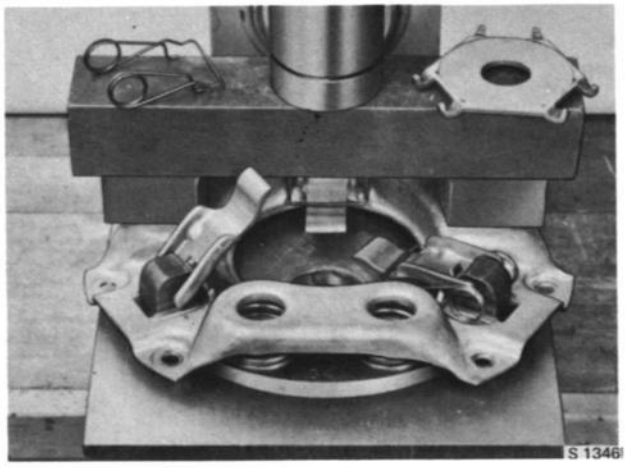

DISASSEMBLY OF CLUTCH IN A PRESS

3. Remove the clutch release levers from the clutch cover.
4. Reduce slowly the pressure in the press.
5. Remove the clutch cover from the pressure plate.
6. Remove the clutch springs.

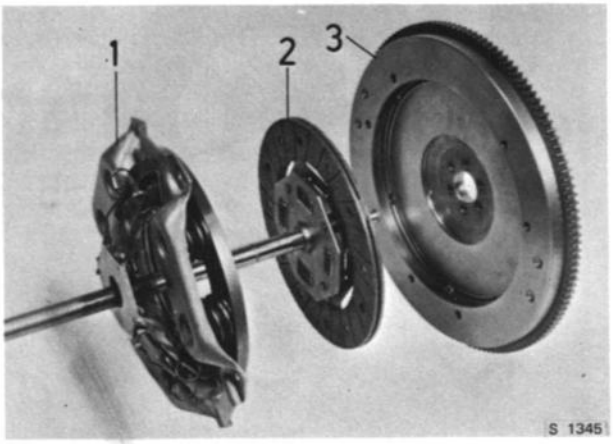

CLUTCH WITH FLYWHEEL

1. Clutch housing with pressure plate
2. Clutch disc
3. Flywheel

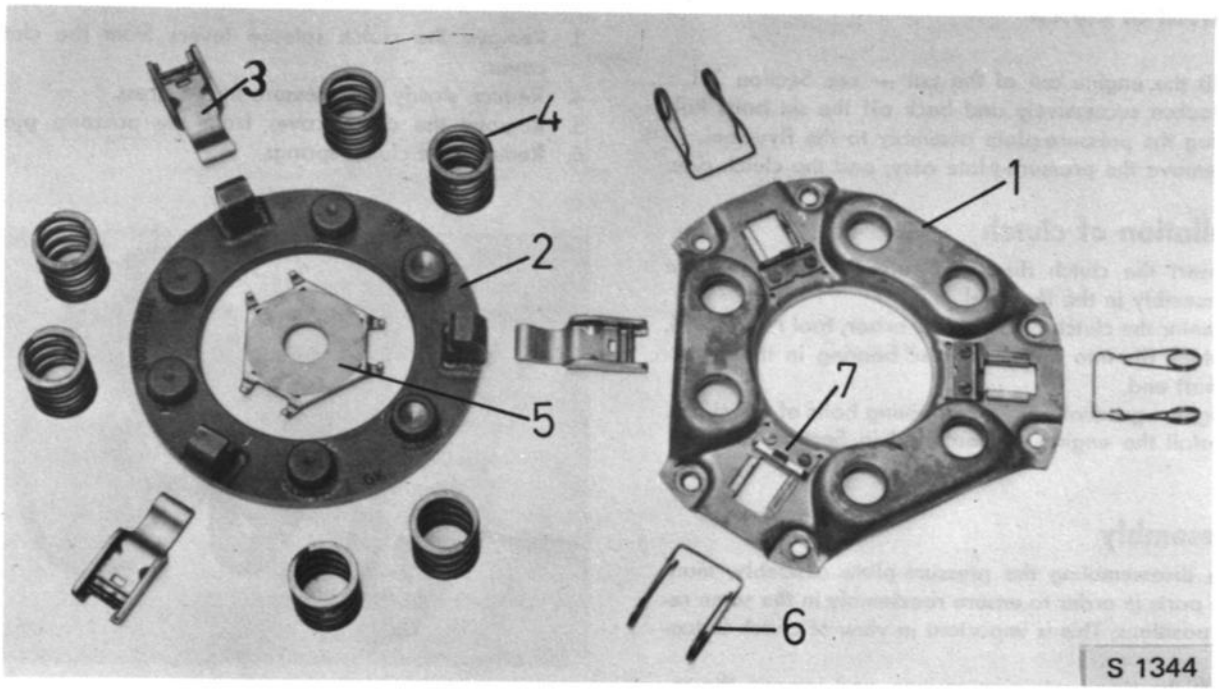

CLUTCH, DISASSEMBLED

1. Clutch cover
2. Pressure plate
3. Clutch release lever
4. Spring
5. Release plate
6. Retaining spring
7. Strut

Reassembly

Reassemble in the reverse order.

CLUTCH DISC

Checking the clutch and changing disc facings

1. Examine the clutch face in the flywheel. Burns or small scratches on the face are of minor importance. If deep scores are present, on the other hand, the flywheel should be machined or a new one fitted.
2. Check the pressure plate for scores or skewness. If the surface is uneven, fit a new pressure plate or alternatively, face-grind the worn face.
3. Check the three clutch levers for wear. These are worn by pressure against the release plate. When checking, the latter must be removed.
4. Make sure that the release plate is undamaged. Damage can occur if the graphite ring on the release bearing is severely worn or damaged.
5. Examine the release bearing, paying particular attention to the graphite ring, which must not be worn down to the level of its retainer.
6. Check the clutch disc for wear and reface if necessary.
7. Before riveting on the new facings, check the setting of the clutch plate and adjust if necessary. All the segments must have the same setting. Rivet locations are illustrated in the figure.
8. After having fitted new facings, the clutch disc should be checked for skewness. Check with the aid of a dial indicator and an arbor. See fig.

LOCATION OF FACING RIVETS

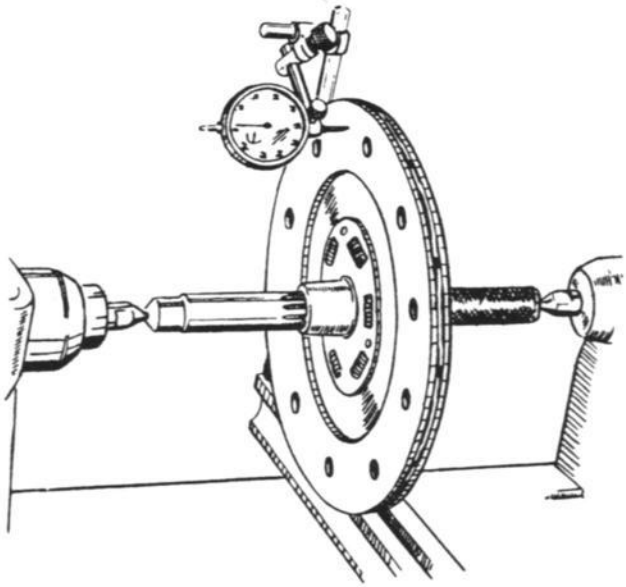

CHECKING THROW OF CLUTCH DISC

CLUTCH OPERATION UP TO AND INCL. MODEL 1968

Removal and installation of clutch pedal

1. Remove the cotter and washer, and pull out the pin retaining the master-cylinder push-rod.
2. Remove the cotter and washer from the pedal shaft.
3. Lift the pedal clear of the spring and pull it off the shaft.
4. Remove the spring.
5. Before reinstalling, grease the pedal bearings with chassis grease.
   Reassembly takes place in the reverse sequence.

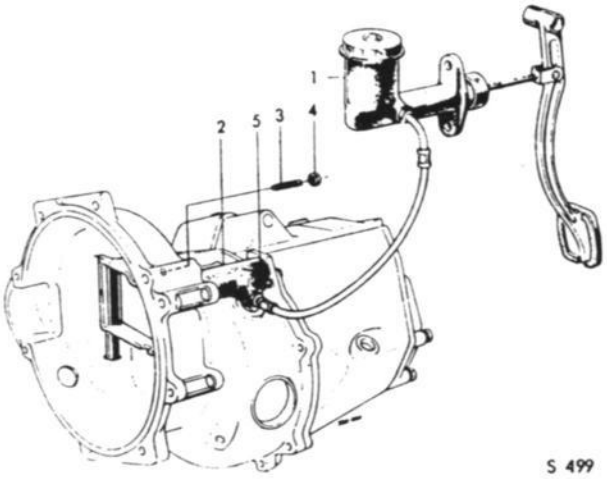

CLUTCH PEDAL WITH ADJUSTMENT DEVICE

1. Master cylinder
2. Slave cylinder
3. Adjustment screw
4. Stop nut
5. Bleeder nipple

Adjustment of clutch-pedal free movement

The clearance between release bearing and release plate is gradually decreased by wear on the clutch facings. Adjust the clutch pedal free movement with the screw on the clutch housing. This screw is located on the opposite side in relation to the slave cylinder. The free movement is increased by slackening the screw (turning to the left). The clearence is checked by pressing the slave cylinders connection to the clutch arm. A movement of 0.16" (4 mm) here, gives the correct clutch clearance. See fig.

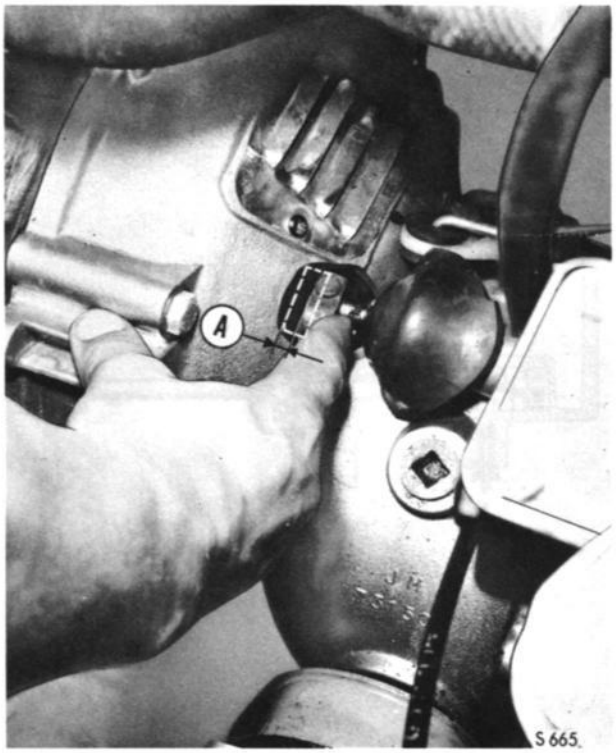

ADJUSTING THE CLUTCH CLEARANCE

A = 0.16" (4 mm)

MASTER CYLINDER

General

The master cylinder is a cast unit containing the cylinder and fluid reservoir.

The cylinder consists of a housing of light alloy with a surface-polished bore and with an inner assembly, made up to the push-rod, cupped washer, lock ring, piston, end seal, piston seal, spring retainer, piston-return spring, valve spacer, elastic washer, valve spindle and valve seal. The open end of the cylinder is protected by a rubber dust cap.

When the piston returns to the position of rest, the valve which affords a seal in the bottom of the cylinder during disengagement opens. When the valve is open the fluid is able to pass freely from the slave cylinder to the reservoir.

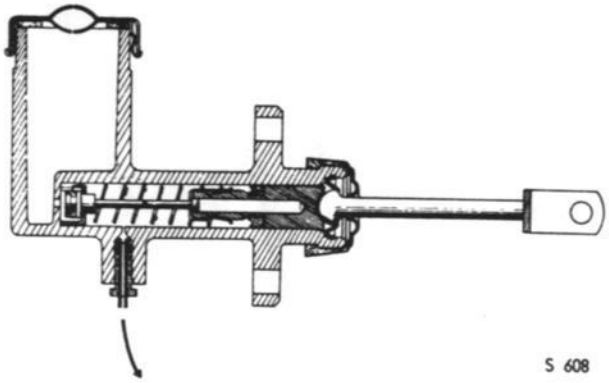

MASTER CYLINDER, CUT-AWAY VIEW

Removal

1. Detach the hose from the slave cylinder and pump out the fluid into a clean vessel.
2. Separate the push-rod from the clutch pedal by removing the cotter, the plain washer and the pin.
3. Back off and remove the retaining bolts and remove the master cylinder from the dash panel.

Installation

1. Install the master cylinder in position on the dash panel.
2. Attach the push-rod to the clutch pedal by inserting the pin through the holes in the push-rod fork and the hole in the clutch pedal. Refit the plain washer and secure with the cotter.
3. Reconnect the hose.
4. Bleed the system.

Disassembly

Ease the rubber dust cap back and remove the lock-ring, using long-nosed pliers. It is now possible to remove the push-rod and the cupped washer. Removal of the push-rod reveals the piston and its seal. Remove the complete piston assembly. The assembly can be disassembled by lifting the retainer spring leaf over the tongued end of the piston. Carefully take the piston seal off the piston and remove the end seal.

Push down the piston-return spring, thus enabling the valve spindle to slide through the key-shaped hole in the retainer so that the spring lets go. Remove the valve spacer, taking care not to damage the elastic washer located under the valve head. Remove the seal from the valve head.

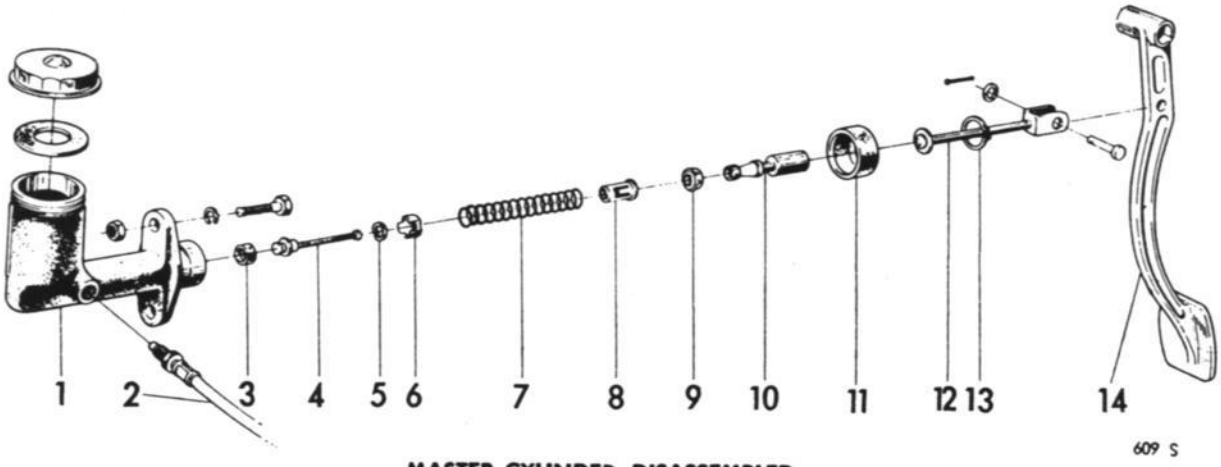

MASTER CYLINDER, DISASSEMBLED

1. Cylinder housing
2. Hose
3. Seal
4. Rod
5. Elastic washer
6. Valve spacer
7. Spring
8. Spring retainer
9. Seal
10. Piston
11. Rubber dust cap
12. Push-rod with cupped washer
13. Lock ring
14. Clutch pedal

Examine the cylinder bore and if it not scored or distorted, and feels smooth to the touch, new seals may safely be fitted. If, on the other hand, the slightest doubt is entertained about the condition of the bore, a new cylinder should be fitted.
If the old seals are loose on the piston and too big, contamination by mineral oil may be suspected. This is the commonest cause of cylinder trouble, and often sufficient pains are not taken to prevent it. Seals of natural rubber are highly susceptible, and even minute quantities of oil can gradually cause considerable swelling. If the slightest trouble in this respect is suspected, fit new seals throughout the system and flush the system clean with pure brake fluid.

Reassembly

Fit the seal with its flat side properly located on the valve head. Then put on the elastic washer with its cupped side facing the lower side of the valve head, retaining it in position by means of the valve-spacer, the legs of which are turned towards the valve seal. Refit the piston return spring, centering it on the washer, insert the spring retainer in the spring and press down until the valve spindle bottoms through the key-shaped hole. At the same time, check that the spindle is correctly located in the middle of the retainer. Check that the spring is still centered on the spacer. Fit a new seal on the piston with its flat side turned towards the seat of the piston.
Insert the small end of the piston in the retainer until the retainer spring leaf engages the piston tongue. Press the retainer leaf fully home.
Lubricate the piston thoroughly with Wakefield/Girling Rubber Grease 3 and refit the assembly in the cylinder bore, valve end first, at the same time easing the piston seal lips slowly into the bore.
Remount the push-rod in the cylinder, followed by the lock-ring, placing this in the milled groove in the cylinder body. Replace the rubber dust cap or, if it is damaged, fit a new one.

SLAVE CYLINDER

General

The slave cylinder is secured to the clutch housing by means of a screw. The inner assembly comprises the push-rod, lock-ring, piston and piston spring. The open end of the cylinder is protected by a rubber dust cap and a bleed nipple is located in the bleeder opening.

Removal

1. Disconnect the hose and pump out the fluid into a clean vessel .
2. Back off the retaining screw(s) for the cylinder.
3. Separate the cylinder from the push-rod and clutch housing.

Installation

1. Locate the slave cylinder on the clutch housing and pass the push-rod through the hole in the rubber dust cap.
2. Refit and tighten the retaining screw(s).
3. Reconnect the hose.
4. Bleed the system.

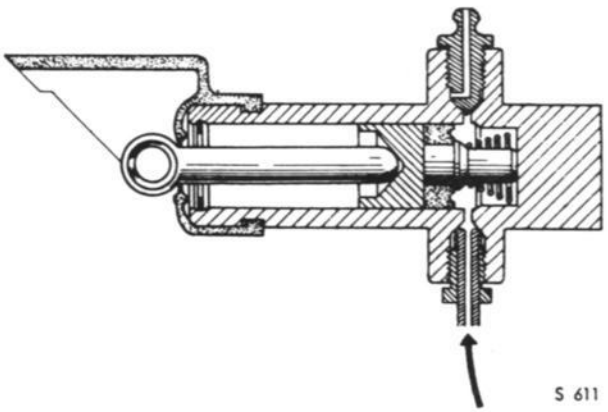

SLAVE CYLINDER, CUT-AWAY VIEW

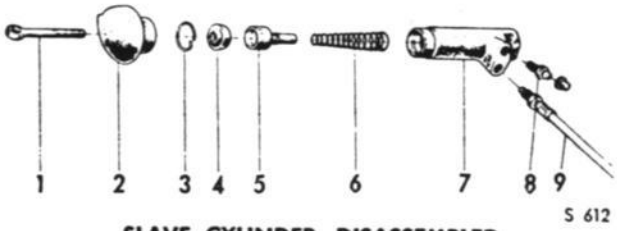

SLAVE CYLINDER, DISASSEMBLED

1. Push-rod
2. Rubber dust cap
3. Lock ring
4. Seal
5. Piston
6. Spring
7. Cylinder body
8. Bleeder screw
9. Hose

Disassembly

Ease the dust cap back and remove the lock-ring, using long-nosed pliers. The piston with seal attached can now be removed, followed by the spring. Examine the cylinder bore and if it is not scored or distorted, and feels smooth to the touch, a new seal can be fitted. If, on the other hand, the slightest doubt is entertained about the condition of the bore, a new cylinder should be fitted.

Reassembly

Reassemble by following in reverse sequense the instructions given for "Disassembly", taking pains to lubricate the seal and to pack the rubber boot with Wakefield/ Girling Rubber Grease No. 3. Always lubricate the cylinder bore with brake fluid when reassembling this unit.

Bleeding the master and slave cylinders

1. Connect a hose (internal diameter approx. 0.25 in. = 6 mm) to bleeding nipple of the slave cylinder. Place the free end of the hose in a collecting vessel partly filled with brake fluid.
2. Fill the master cylinder reservoir with brake fluid.
3. Open the bleed nipple of the slave cylinder half a turn.
4. Place a cooling system tester at the filling hole of the master cylinder.
5. Pump several times with the hand pump, until all air has left the system.
6. Close the bleeding nipple of the slave cylinder.
7. By depressing the clutch pedal, check that there is no air left.

RELEASE BEARING

Removal and installation of release bearing

1. Lift the engine out of the car as described in Section 201.
2. Turn the clutch lever forward and remove the two spring clips retaining the release bearing in the fork. See fig.
3. Remove the release bearing.
   After changing the bearing, reinstall in the reverse sequence. If the release bearing is provided with a graphite ring, the ring must not be worn with its retainer.

> IMPORTANT
>
> Always make sure that the spring clips are correctly located.

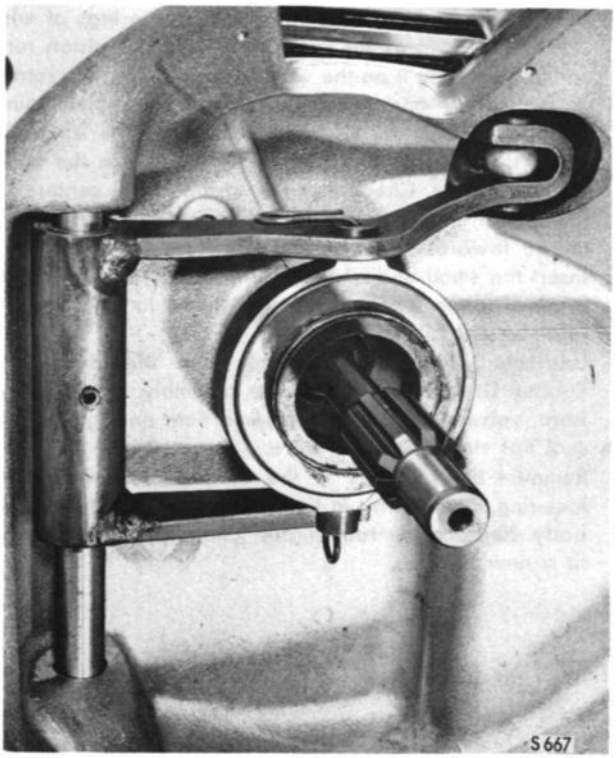

RELEASE BEARING ATTACHMENT

CLUTCH OPERATION

As from model 1969

Removal and installation of clutch pedal

1. Remove the protective cover of the steering wheel shaft.
2. Remove the cotter pin and washer, and pull out the push rod of the master cylinder.
3. Slacken the return spring of the clutch pedal.
4. Remove the lock washer of the pedal shaft. Remove the pedal.
5. If necessary, remove the springs.
6. Before the refitting, grease the pedal bearings with SAAB Special chassis grease.

Reassembly takes place in the reverse sequence.

Adjustment of clutch-pedal free movement

The clearance between release bearing and release plate is gradually decreased by wear on the clutch facings. Adjust the clutchpedal free movement with the screw on the clutch housing, located in the opposite side in relation to the slave-cylinder. The free movement is increased by slackening the screw (turning to the left). The clearence is checked by pressing the slave cylinders connection to the clutch arm. A movement of 0.16" (4 mm) here, gives the correct clutch clearance. See fig.

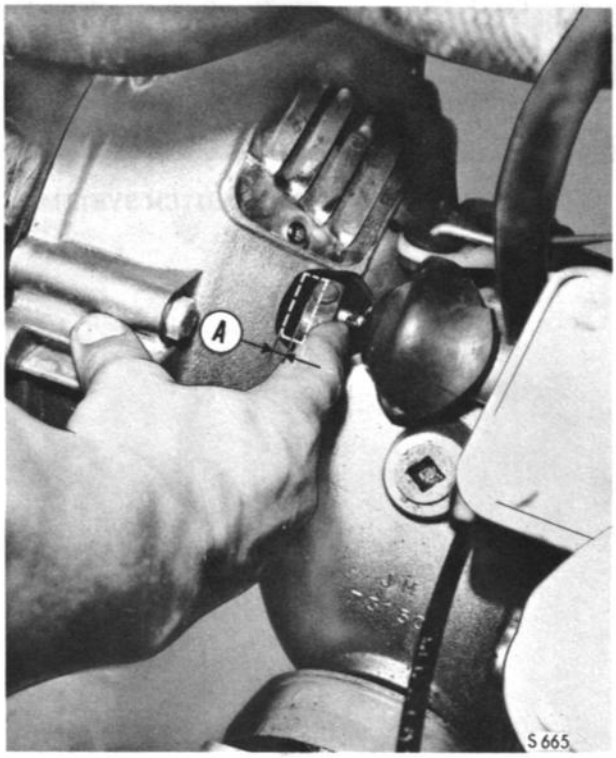

ADJUSTING THE CLUTCH CLEARANCE

A = 0.16" (4 mm)

MASTER CYLINDER

General

The master cylinder consists ot a cast body with a fluid container of plate enclosing the cylinder housing. The operating unit consists of the following main parts: push rod, piston, piston seal and return spring, see fig. For sealing at the push rod end there is a pair of rubber bellows.

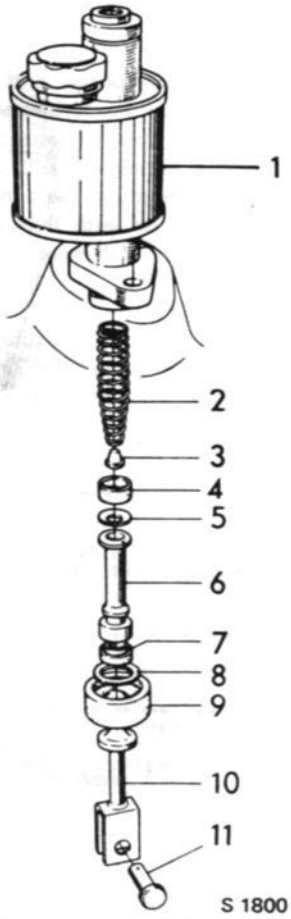

1. Housing
2. Spring
3. Spring retainer
4. Gasket
5. Washer
6. Piston
7. Gasket
8. Lock ring
9. Seal bellows
10. Push rod
11. Axle bolt

MASTER CYLINDER, EXPLODED VIEW

Removal

1. Detach the hose from the slave cylinder and pump the fluid into a clean container.
2. Separate the push-rod attachment from the clutch pedal by removing the cotter pin and the axle bolt.
3. Back off and remove the retaining bolts and remove the master cylinder.

Installation

1. Install the master cylinder in position.
2. Attach the push-rod to the clutch pedal by inserting the pin through the holes in the push-rod fork and the hole in the clutch pedal. Refit and secure with the cotter pin.
3. Reconnect the hose.
4. Bleed the system.

Disassembly

Ease the rubber dust cap back and remove the lock-ring, using long-nosed pliers. Remove the push-rod and its washer. The piston and its seal now become visible. Remove the piston, washer, piston seal and spring. Gently take the seal off the piston.

Examine the cylinder bore and if it is not scored or distorted, and feels smooth to the touch, new seals can be fitted. If, on the other hand, the slightest doubt is entertained about the condition of the bore, a new cylinder should be fitted.

If the old seals are loose on the piston and too big, contamination by mineral oil may be suspected. This is the commonest cause of cylinder trouble. Seals of natural rubber are highly suspectible to mineral oil, and even minute quantities of oil can gradually cause considerable swelling. If oil is suspected, fit new seals throughout the system and flush the system clean with pure brake fluid.

Reassembly

Fit the return spring and spring retainer. Lubricate the piston and seals thoroughly with Wakefield/Girling Rubber Grease 3 and refit gasket, washer, and piston with gaskets.

> NOTE!
> When fitting the washer, make the convex side face the piston, see fig.

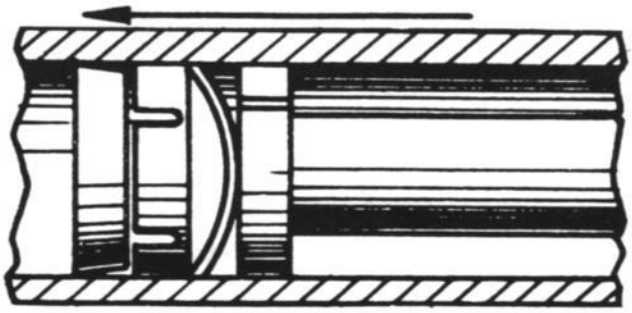

POSITIONING OF WASHER

Fit the push rod into the cylinder, followed by the washer and the lock ring, placing the latter in the cylinder housing groove. Refit the seal bellows, or fit new ones if the old ones are damaged.

Bleeding the master and slave cylinders

1. Connect a hose (internal diameter approx. 0.25 in. = 6 mm) to bleeding nipple of the slave cylinder. Place the free end of the hose in a collecting vessel partly filled with brake fluid.
2. Fill the master cylinder reservoir with brake fluid.
3. Open the bleed nipple of the slave cylinder half a turn.
4. Place a cooling system tester at the filling hole of the master cylinder.
5. Pump several times with the hand pump, until all air has left the system.
6. Close the bleeding nipple of the slave cylinder.
7. By depressing the clutch pedal, check that there is no air left.

BLEEDING THE CLUTCH SYSTEM

SLAVE CYLINDER

General

The slave cylinder is fastened to the clutch cover with a bolt.

The inner assembly comprises the push-rod, lock-ring, piston and piston spring. The open end of the cylinder is protected by a rubber dust cap. A bleed nipple is located in the bleeder opening.

Removal

1. Disconnect the hose and pump the fluid into a clean vessel.
2. Back off the retaining screw for the cylinder.
3. Separate the cylinder from the push-rod and clutch housing.

Installation

1. Locate the slave cylinder on the clutch housing and pass the push-rod through the hole in the rubber dust cap.
2. Refit and tighten the retaining screw.
3. Reconnect the hose.
4. Bleed the system.

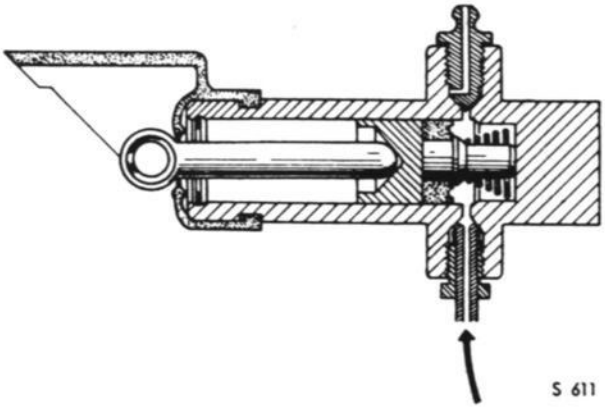

SLAVE CYLINDER, CUT-AWAY VIEW

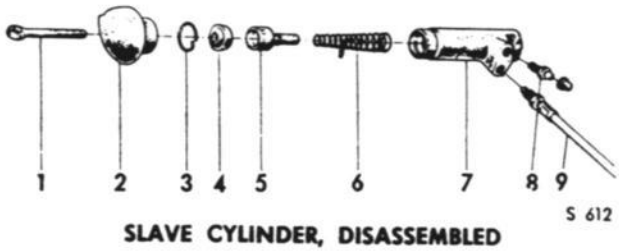

SLAVE CYLINDER, DISASSEMBLED

1. Push-rod
2. Rubber dust cap
3. Lock ring
4. Seal
5. Piston
6. Spring
7. Cylinder body
8. Bleeder screw
9. Hose

Disassembly

Ease the dust cap back and remove the lock-ring, using long-nosed pliers. The piston with seal attached can now be removed, followed by the spring. Examine the cylinder bore and if it is not scored or distorted, and feels smooth to the touch, a new seal can be fitted. If, on the other hand, the slightest doubt is entertained about the condition of the bore, a new cylinder should be fitted.

Reassembly

Reassemble by following in reverse sequense the instructions given for "Disassembly", taking pains to lubricate the seal and to pack the rubber boot with Wakefield/Girling Rubber Grease No. 3. Always lubricate the cylinder bore with brake fluid when reassembling this unit.

REMOVAL AND INSTALLATION

Removal of engine and gear box

If work is to be done on the transmission unit only, the entire power unit must be lifted out. The engine is then separated from the transmission unit.

1. Disconnect the battery earth cable from the battery.
2. Remove the hood by opening it wide and then removing the locking springs for the hood hinges. Disconnect the hose for the windshield washer. Now grip the hinge stay, bending it slightly inwards to release the pin on one side. An assistant will hold the hood on the other side and help to lift it off.

REMOVAL OF FASTENING SCREWS, FRONT PLATE

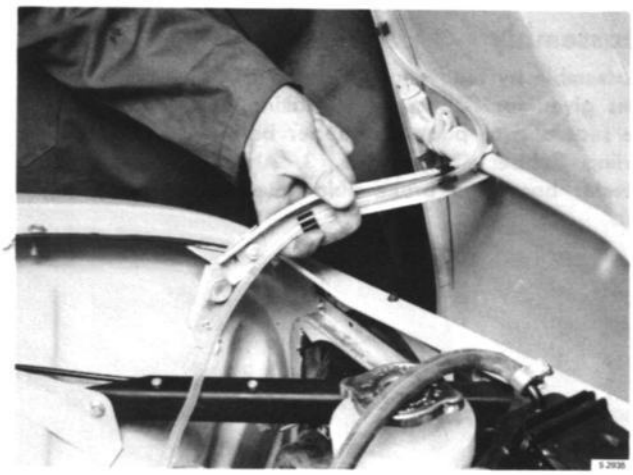

REMOVAL OF ENGINE HOOD

3. Drain off the cooling water through the radiator draining tap. To ensure that draining will be as effective as possible, bleed the system through the bleed nipple on the heat exchanger.

Up to and inlc. model 1968:

4. Disconnect the headlamp and direction indicator cables.
5. Back off the four screws for the front panel and detach the two radiator supports from the car body. Detach the clamping straps from the radiator and remove the hood lock and control wire.

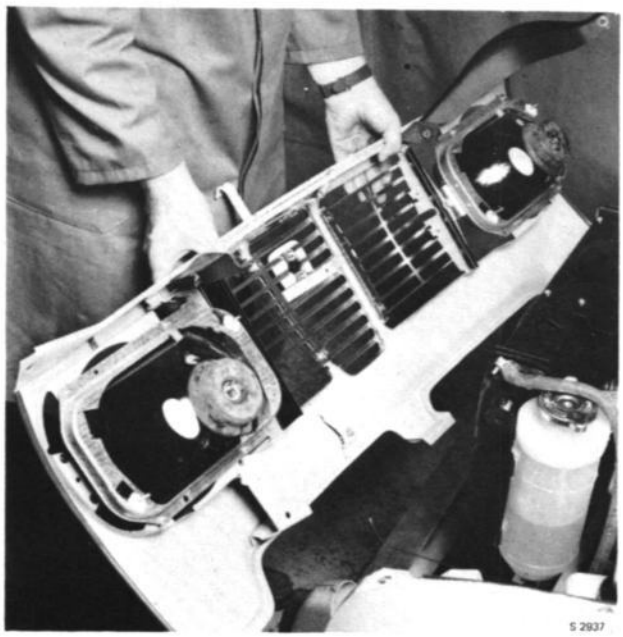

REMOVAL OF FRONT PLATE

Model: 1969—1970

4. Remove the headlamp decor frames. Disconnect the headlamp cables.
5. Back off the four screws for the front panel and detach the two radiator supports from the car body. Detach the clamping straps from the radiator and remove the control wire.

As from model 1971:
(With headlamp cleaner)

4. Remove the headlamp decor frames. Disconnect the hoses for the headlamp washers from the respective nozzles. Disconnect the headlamp cables.

5a. Back off the four screws for the front panel and detach the two radiator supports from the car body. Detach the clamping straps from the radiator and remove the control wire.

b. Slacken the lower screw for the expansion vessel bracket slightly. Bend the bracket so that the headlamp cleaner motor goes clear.

c. Detach the cables from the headlamp cleaner motor (note the connection positions of the cables).

6. Remove the front panel, taking great care to avoid damaging the paintwork.
7. Disconnect the upper coolant hose from the engine and the lower coolant hose from the radiator.
8. Back off and remove the two lower radiator retaining screws and remove the radiator.
9. Disconnect all hoses and cables from the engine. Note the positions of the cable connections on the alternator.
10. Remove the air filter. Place a plastic cover No. 783729 over the carburetor air inlet to prevent the entry of foreign matter into the engine.
11. Disconnect the throttle control and the engine side support, as well as the preheater casing.
12. Back off and remove the flange nuts for the exhaust pipes at the cylinder heads. Remove the lower clamps for the exhaust pipes at the engine cushions.
13. Remove the rubber cushions for the middle exhaust pipe from under the floor.
14. Remove the spacers at the cylinder heads and lower the muffler as far as possible.
15. Remove the two front engine cushions, working from above.
16. Disconnect the freewheel control from the gear box.
17. Back off the rear retaining screw holding the clutch cylinder and hang the cylinder up in a suitable position. Collect the shims, if any, fitted between the cylinder and the gear box.
18. Remove the gear shift rod joint from the gear box after removal of the taper pin.
19. Disconnect the speedometer cable from the gear box.
20. Lift up the front part of the floor mat and remove the rubber plug so that the center screw of the rear engine bracket becomes accessible. Remove the screw with the aid of a 9/16" socket with extension.
21. Jack up the car and place trestles in the front edges of the sills so that the front wheels are clear of the floor.
22. Undo the large clamps round the rubber boots on the inner universal joints.
23. Attach the lifting hook, tool No. 786202 — see fig.
24. Attach the lifting hook to a suitable hoist and lift the engine carefully about 2 in. (50 mm). Pull the transmission pin out of the rear engine bracket.
25. Open up the inner universal joints, first on the right side and then on the left. Do this with the T-shaped pieces of the drive shafts located vertically and with the engine unit pushed over as far as possible in the opposite direction. Fit protective cover 731762 in the rubber boots and 783846 on the inner drivers.
26. Lift the power unit out of the engine compartment. Make sure that the distributor vacuum chamber is not damagea against the engine compartment cross stay.

REMOVAL AND INSTALLATION OF POWER UNIT

27. Clean the power unit and separate the transmission unit from the engine.

INSTALLATION

1. Check that the inner universal joints are filled with the appropriate grease. The joints must be completely filled with grease upon assambly.
2. Lift the power unit into the engine compartment, using the lifting hook, tool No. 786202.
3. Lower the power unit so far that the engine brackets are about 2 in. (50 mm) from the engine cushions.
4. Place the T-pieces of the drive shafts in the inner universal joints. Do this with the T-pieces located vertically and with the power unit pushed over as far as possible in the opposite direction. Assembling is done first on the left side and then on the right.
5. Fit the engine side support and tighten it up when the engine is in place.
6. Lower the unit into position and tighten the front engine cushions.
7. Lower the car onto the wheels.
8. Fit new clamps round the inner universal joints.
9. Tighten the bolts for the rear engine bracket.

> NOTE
>
> Check that the limiting washer on the rear of the engine bracket is in position. This washer serves to limit the forward movement of the power unit. If the washer is missing, there is a risk that the cooling fan will collide with the radiator if the brakes are powerfully applied.

10. Refit the rubber plug and put back the rubber floor mat.
11. Reconnect the speedometer cable and the freewheel control to the gear box.
12. Refit the gear shift rod joint.
13. Refit the clutch cylinder, together with any shims. Adjust the clutch.
14. Reconnect the exhaust pipes to the cylinder heads. Fit new gaskets.
15. Refit the clamps for the exhaust pipes and the suspension under the car.
16. Reconnect the throttle control.
17. Reconnect all hose and cable connections to the engine.

> CAUTION
>
> Do not confuse the cables to the alternator, as this may result in ruining the latter. First connect the black leads to D-, whereafter there will be little risk of intermixing the other cables.

18. Refit the air filter.
19. Refit the radiator. Connect the lower coolant hose before tightening the two lower retaining screws.
20. Connect the upper coolant hose.
21. Refit the front panel and the radiator clamping straps.
22. Refit the radiator stays and the hood lock.
23. Reconnect the headlamp and direction indicator cables.
24. Refill the cooling system and bleed the system.
25. Check the oil level in the gear box and top up with oil if necessary.
26. Check the engine oil level. Top up if necessary.
27. Reconnect the earth cable to the battery and refit the hood.
28. Check the headlight alignment. Adjust if necessary.
29. Teststart engine. Note the oil pressure and coolant temperature. Check the coolant level when the engine has been run up to the warm condition.
30. Take the car out for a test run.

DIVISION OF REMOVED POWER UNIT

Disassembly

1. Remove the flywheel guard plate from under the clutch housing.
2. Back off the screws between the engine and the transmission.
3. Remove the starter.
4. Separate the engine from the gear box.

Reassembly

1. Reinstall the gear box, checking that the guide sleeves take up the correct positions in the clutch housing.
2. Tighten the screw for the clutch housing uniformly and with the correct torque.
3. Refit the guard plate for the flywheel.

Disassembly

Proceed step by step as described in the following until the part concerned has been removed.

1. Clean the outside of the transmission unit and drain off the oil.
2. Remove the inner universal joints and shafts. See Section 473.
3. Separate the transmission at the joint between the clutch housing and the transmission case. After having removed all the screws, the clutch shaft will have to be turned to a specific position to allow separation of the cases. Therefore, turn the clutch shaft to locate this position while removing the clutch housing.
4. Remove the transmission case cover together with the gear-shift fork shaft.
5. Fit the transmission case in the fixture, tool No. 784100, as illustrated.

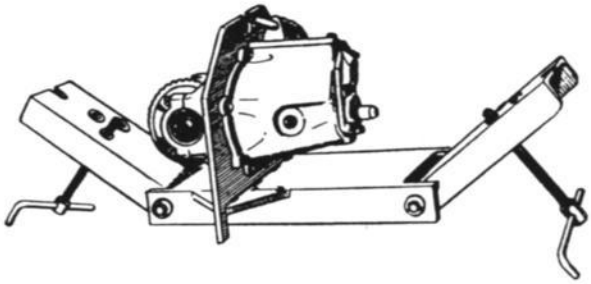

TRANSMISSION CASE HELD IN FIXTURE

6. Release the two bearing caps and lift out the differential assembly. Collect the spacers and shims outside the bearings for subsequent refitting, provided that differential backlash has not been altered by the fitting of a new part. Disassembly of the differential is described in Section 473.

Differential and freewheel

> NOTE
>
> Before continuing to dismantle the transmission unit, always check the location of the pinion and measure the ring-gear clearance to ascertain if the setting has been incorrect.

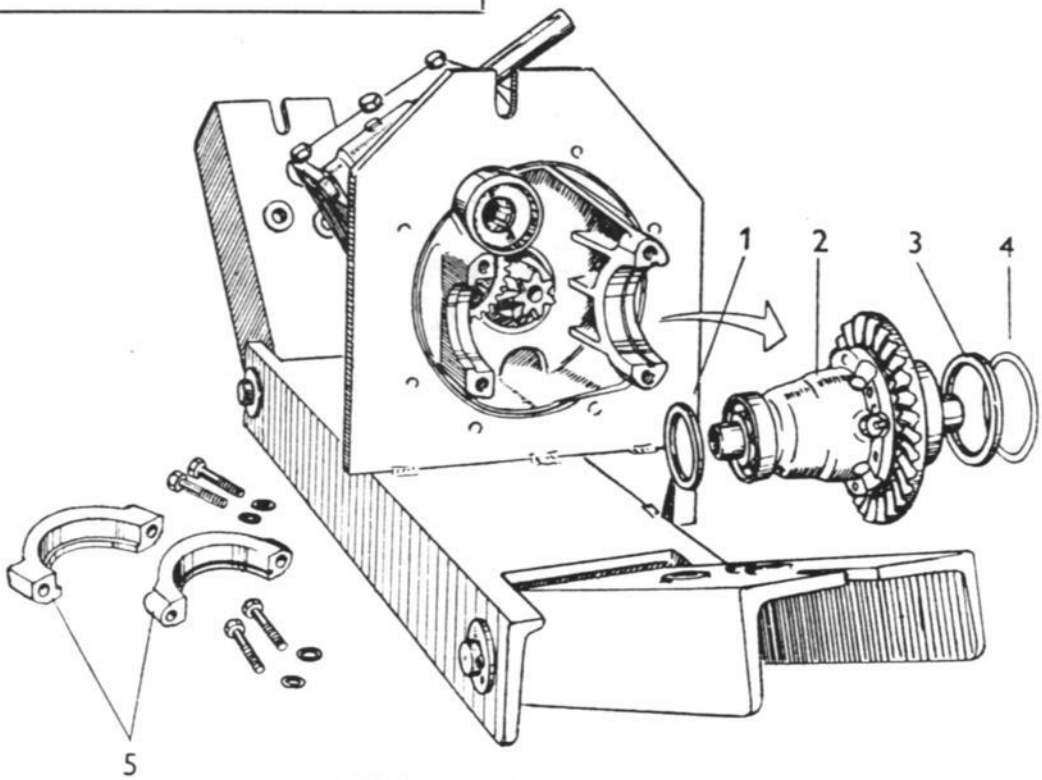

DISASSEMBLY OF DIFFERENTIAL

1, 3 and 4. Spacer rings and shims
5. Bearing caps

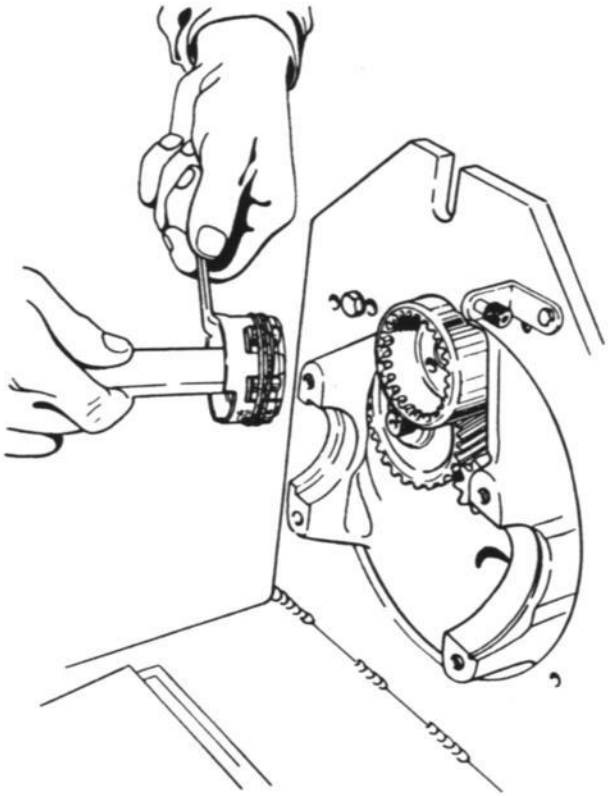

DISASSEMBLY OR REASSEMBLY OF FREEWHEEL HUB WITH TOOL 784068

7. Remove the freewheel hub from the freewheel sleeve, using tool No. 784068 and a rubber band. See fig. As from transmission No. 114860, the freewheel has 10 rollers, and tool No. 786073 must therefore be used. A new tool, No. 879030, can be used for both types of freewheel.
8. Take the needle bearing out of the freewheel sleeve. Check that none of the rollers is missing. If the pinion shaft or bearings are to be dismantled, measure the location of the shaft before removing the end cover. See Section 473.

Gear-shift forks

9. Back off the end-cover bolts and drive out the 1st-2nd and 3rd-4th gear-shift fork shaft from the front, using an arbor or similar tool.
10. When the cover is free, take it off rearwards, keeping the gear-shift forks in position and preventing them from tipping on the shafts, see fig.
    Note the location of shims in the cover and collect the shims.
    Take care to prevent ejection of the poppet balls in the gear-shift forks. See fig.
11. If only the rear pinion shaft bearing is to be removed, this can be done now as follows: Engage two gears (reverse and 3rd), release the retaining washer and back off the left-hand threaded end nut on the shaft, whereupon the bearing can be removed with the aid of puller 784115 — se fig. As from transmission No. F 39522, a new rear pinion bearing with a split inner ring ha s been introduced. This bearing has to be removed in two stages.

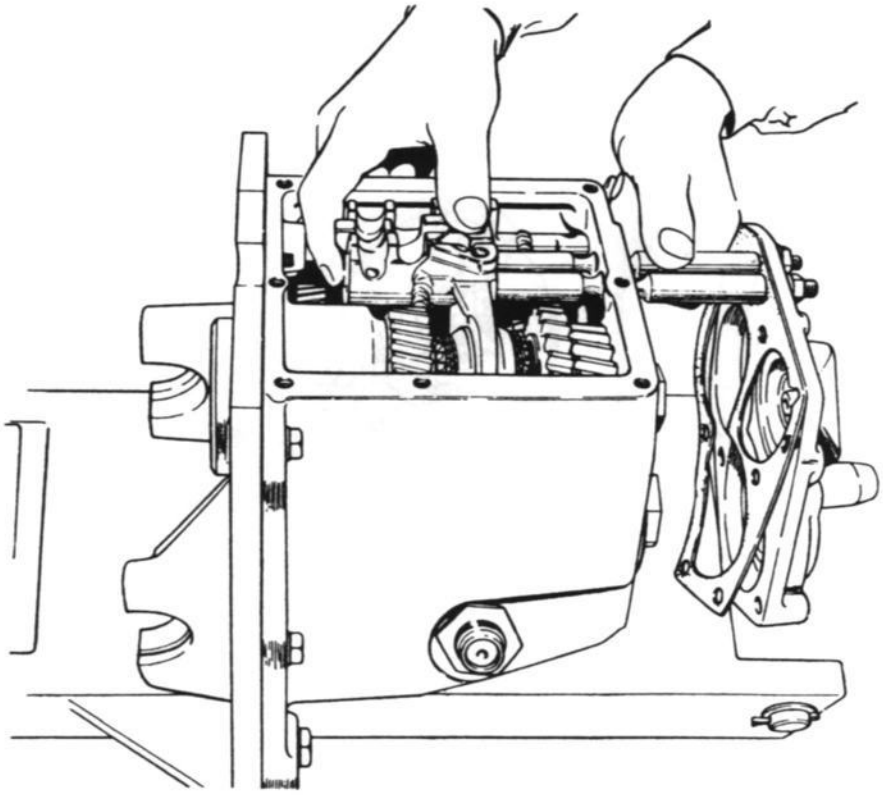

DISASSEMBLY OF END COVER AND SHIFT FORK RAILS

Pull the bearing off the shaft, using puller 784115, and then remove the inner part of the inner ring, which remains on the shaft, using puller 786052. A new bearing can now be fitted and the pinion shaft shimmed.

12. Release the reverse gear-shift fork shaft from the rear by means of a brass arbor or similar implement and withdraw it forwards. Collect the poppet ball in the gear-shift fork.
13. Lift out the three gear-shift forks.

Countershaft with bearings and gears

14. Engage two gears simultaneously, e.g. reverse and 3rd.
15. Back off the nut on the front end of the countershaft. Remove the friction wheel and friction washer. Back off the end nuts of the pinion shaft and/or primary shaft if these items are also to be removed.

As from transmission No. 108911, an oil cup is fitted for lubrication of the countershaft. This must be removed before the end nut. When removing the end nut, tool No. 786132 will be used.

> NOTE
> The pinion shaft nut is left-hand threaded.

16. Return the synchronizer sleeve to the neutral position.
17. Locate arbor 786058 fitted with the shortest point between the front press screw and the countershaft — see fig. — and press in the shaft until the arbor rests against the gearwheel. Meanwhile, the dolly 784125 should be located between the 1st speed gear and the rear end wall of the transmission case — see fig. Change the arbor point to the next longer one and press the shaft in again. Repeat the procedure with the longest point until the bearing and countershaft gear are released.
18. Pull the shaft out rearwards, whereupon the countershaft gear will be released. Collect the spacer and key for the countershaft gear.
    If necessary:
    a. Remove the retaining ring from the shaft and drive off the rear ball bearing and the bearing seat, enabling the reverse gear to be removed.
    b. The front countershaft bearing cannot be changed without removing the primary shaft.

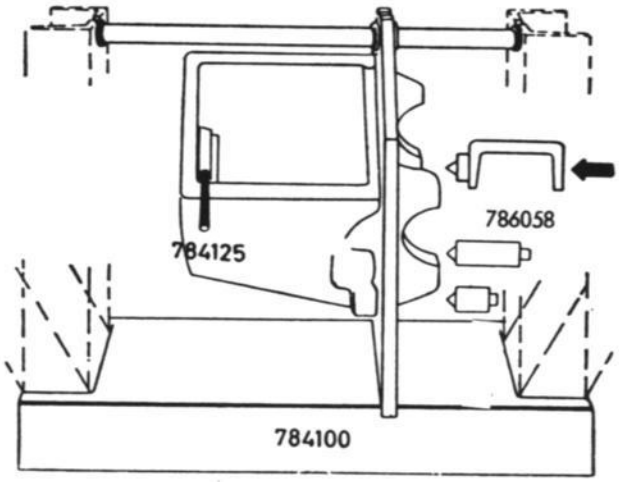

DRIVING OUT COUNTERSHAFT

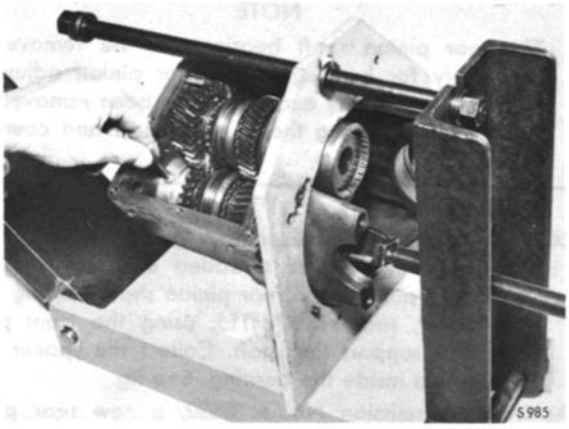

LOCATING OF HOLDING-UP TOOL 784125 DURING DRIVING-OUT OF COUNTERSHAFT

Primary shaft with bearings and gears

19. Back off the primary shaft end nut and remove the retaining washer.
20. Place arbor 784104 between the rear press screw and the shaft, as illustrated, and press the shaft out.
21. Lift out the shaft, gear and synchronizer as a single unit.
22. When the primary shaft has been removed, the front bearing of the countershaft is released and can be removed by gently tapping it out with a fiber mallet towards the differential side.
23. **Drive out the rear primary shaft bearing, using the front press screw, tool No. 784109 and the extension sleeve No. 784106. If necessary:**
    a. **Remove the thrust washer and locking pin from the shaft.**
    b. **Remove the retaining ring from the shaft and drive off the front bearing.**

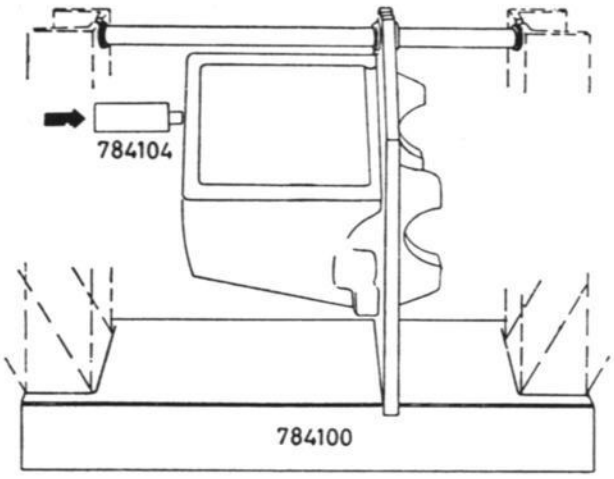

DRIVING OUT PRIMARY SHAFT

Pinion shaft with bearings and gears

> NOTE
>
> **The rear pinion shaft bearing can be removed separately for bearing renewal or pinion adjustment as soon as the end cover has been removed, i.e. without removing the primary shaft and countershaft.**

24. **Remove the speedometer drive gear.**
25. **Remove the left-hand threaded end nut from the shaft and pull out the rear pinion shaft bearing with the puller, tool No. 784115, using the front press screw to support the shaft. Collect the spacer and shims from inside the bearing. See fig.**

As from transmission No. F 39522, a new rear pinion bearing with a split inner ring has been introduced. This bearing has to be removed in two stages. Pull the bearing off the shaft, using puller 784115, and then remove the inner part of the inner ring, which remains on the shaft, using puller 786052.

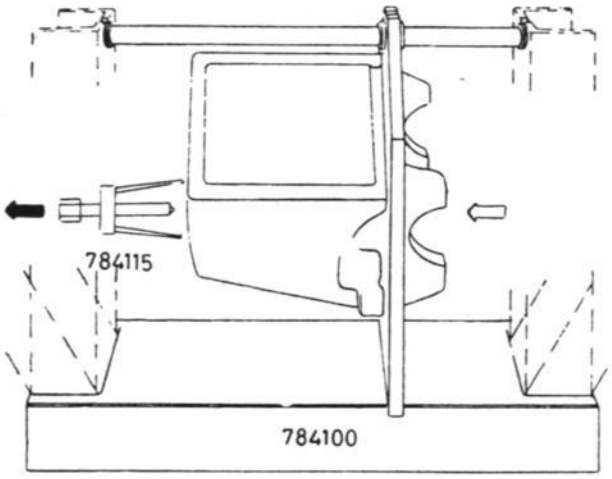

DRIVING OUT PINION SHAFT BEARING

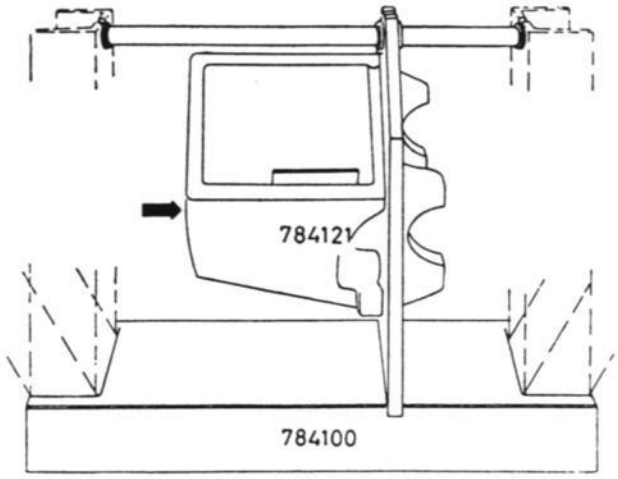

DRIVING OUT PINION SHAFT

26. Locate the supporting tool, No. 784121, on the lower side of the shaft between the rear gearwheel and the front end of the case — see fig. Make sure that the tool is centered on the gearwheel so that the gear does not tip on the shaft.
27. Press the pinion shaft out in the forward direction. Lift the 3rd gear out of the transmission case, withdrawing the shaft at the same time.
If necessary:
a. Press the front roller bearing and pinion shaft 4th gear from the shaft, proceeding as follows:
Remove the retaining ring from the roller bearing, if the latter is to be refitted. If the bearing is to be rejected there will be no need to remove the ring.
Place the pinion shaft and the supporting tool, No. 784123, in an arbor press, as illustrated, and drive out the shaft. Make sure that the outer bearing race is flush against the gearwheel.
The bearing should on no account be taken apart, if it is to be refitted. See to it that the rollers do not fall out and refit the retaining ring immediately, expanding it first so that it springs properly in the groove.
b. Press the oil collector gently out of tne transmission case.

NOTE

When installing new gears in the transmission unit, remember that the 3rd speed gear and pinion shaft 3rd gear are supplied in matched sets, as are the 4th speed gear and the pinion shaft 4th gear. Quiet operation is ensured only if both the gears in the set are renewed at the same time. The pinion shaft and ring gear are also matched and must be changed in pairs.

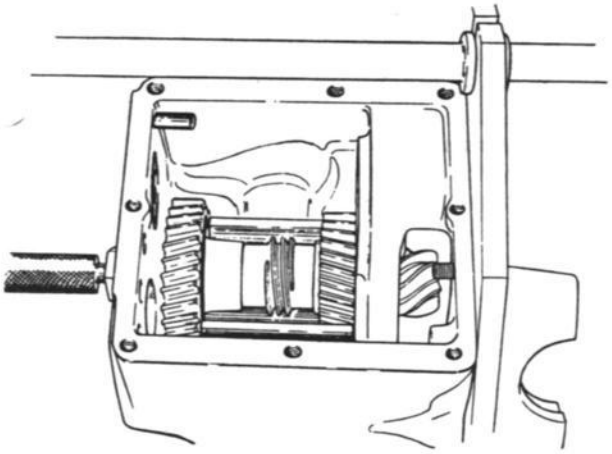

DRIVING OUT THE PINION SHAFT

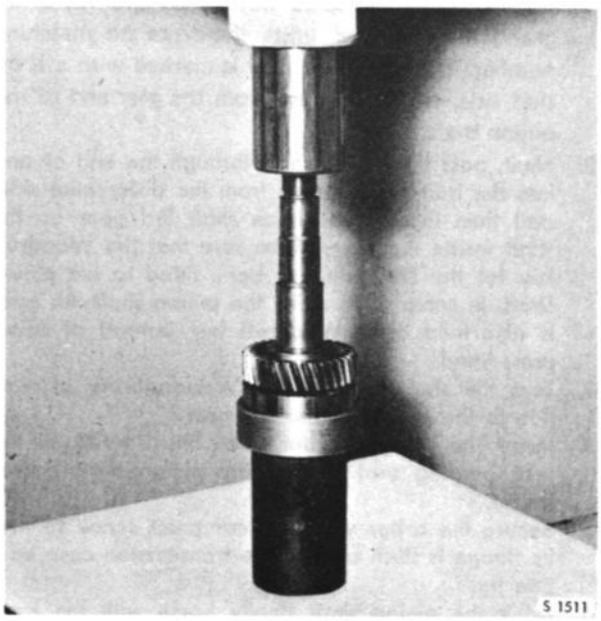

PRESSING OFF THE FRONT PINION SHAFT BEARING AND 4TH GEAR IN AN ARBOR PRESS WITH THE AID OF THE SUPPORTING TOOL, No. 784123

Reassembly of transmission unit

When the part concerned has been removed, clean the cover dividing plane and remove any gasket fragments and residual sealing compound. Inspect and clean all disassembled parts, as well as the transmission case, in kerosene or the like. Make sure that such items as poppet balls, needles from broken bearing, etc., are not left in the case. Then commence reassembly at the appropriate point in the following description.

Pinion shaft with bearings and gears

1. Using an arbor press and tool No. 784106, drive the roller bearing and pinion shaft 4th gear in until the inner bearing race is flush with the pinion gear. Mount the spacers and speedmeter drive on the pinion shaft.
   On older gear units make sure that the matching number faces the same way as on the 4th speed gear. On later gear units there are no matching number. The 4th speed gear is marked with a X on that side, which will face from the gear end of the pinion shaft.
2. Next, pass the pinion shaft through the end of and into the transmission case from the differential side, and then locate the pinion shaft 3rd gear on the shaft inside the case. Make sure that the Woodruff key for the 3rd gear has bec fitted to the pinion shaft. In some older units, the pinion shaft 4th gear is also held by a Woodruff key instead of being press-fitted.
3. Turn the shaft to align the Woodruff key in relation to the groove in the 3rd gear.
4. Insert the guiding arbor, tool No. 784122, in the rear bearing seat so that the pinion shaft passes into it.
5. Secure the arbor with the rear press screw so that its flange is flush against the transmission case end. See fig.
6. Drive the pinion shaft finally home with the front press screw, checking that the key engages in the pinion shaft 3rd gear.
7. Back off the rear press screws and remove the arbor from the bearing seat.
8. Place an 0.14 in. (3.6 mm) spacer on the shaft end.

NOTE! If the rear pinion bearing is equipped with split inner ring, the spacer washer has to be placed next to the bearing. The washer diameter will be 1.4 in. (36 mm).

> NOTE
>
> If no part of the pinion shaft assembly has been renewed, the previously used spacer and shims may be refitted.

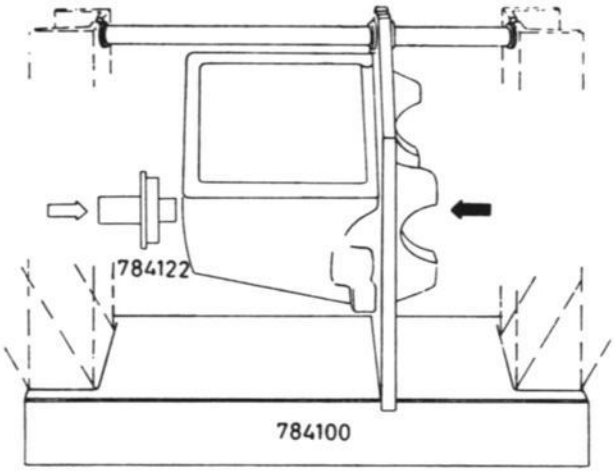

DRIVING IN PINION SHAFT

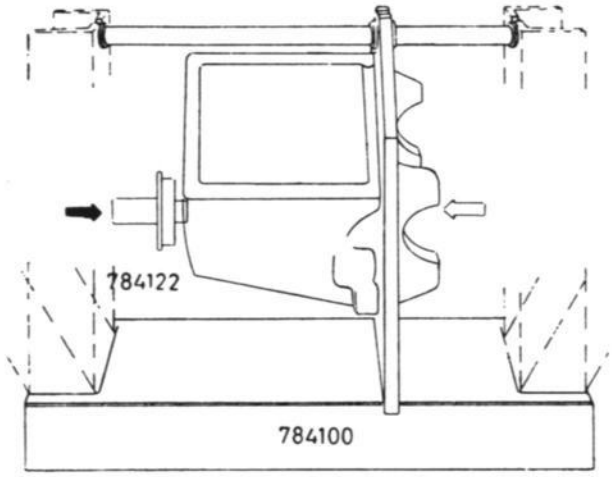

DRIVING IN PINION SHAFT BEARING

9. Using the press screw and arbor No. 784122, press the rear ball bearing, complete with retaining ring, into the transmission case end. Use the press screw at the front end of the pinion shaft as a support during this operation.
   In case of a split bearing, fit the inner ring first and then the principal part of the bearing on the shaft. Then press the bearing in, as described above.
10. Fit a new tabbed washer onto the pinion shaft, with the tab facing outwards. Put on the left-hand threaded nut, but do not tighten it with a torque wrench until the primary shaft and countershaft have been reassembled. Se paragraph 26.

Primary shaft with bearings and gears

11. Up to and including gear box 276503. Refit the front bearing (using tool No. 784107) and place the retaining ring, locking pin, thrust washer and 4th speed gear needle bearing on the primary shaft. Check that the locking pin prevents the thrust washer from rotating.
    As from gear box 276504. Fit the oil thrower and the front bearing (using tool No. 784107), and place the retaining ring, washer and 4th speed gear needle bearing on the primary shaft.
12. Before pressing in the primary shaft, the countershaft front bearing must be placed in position. Press the bearing in from the front with the aid of the arbor, tool No. 786134, until it rests hard against the retaining ring in the bearing seat.
13. Assemble the primary shaft components, the 3rd and 4th speed gears together with the synchronizer sleeve and rings, and lift the entire assembly into the transmission case while passing the aligning arbor 784114 into the 3rd speed gear through the rear bearing seat, and secure the arbor with the press screw.
14. Pass the shaft in carefully from the front until its splines enter the synchronizer hub.
15. Fit the arbor, tool No. 784104, into the freewheel sleeve.

> NOTE
>
> The needle bearing must be removed from the freewheel sleeve while this is being done.

16. Using the press screw, drive the primary shaft carefully in against the arbor in the freewheel sleeve — see fig. — until the 3rd speed gear rests har against the rear end of the case. Check that the synchronizer hub does not tip.
17. Remove the aligning arbor from the 3rd speed gear and locate the needle bearing, spacer sleeve and bushing for this gear on the shaft inside the gear hub.
18. Place the spacer — with the bevelled side facing outwards — and the rear bearing on the primary shaft, and then drive the bearing in with tool No. 784109. Note that the front press screw and the arbor in the freewheel sleeve serve to hold up the shaft.
19. Place a new tabbed washer, with the tab facing outwards, and a nut on the shaft. Do not tighten the nut with a torque wrench until the countershaft has been refitted. See point **26**.

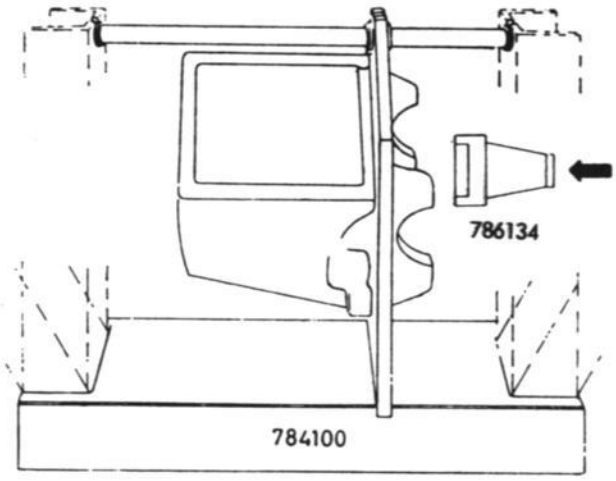

DRIVING IN COUNTERSHAFT BEARING

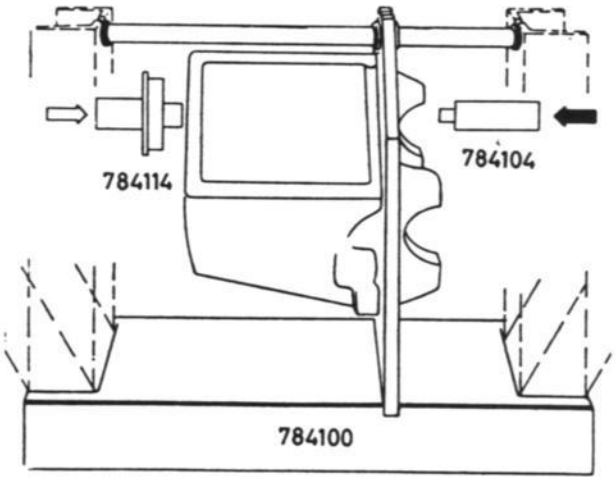

DRIVING IN PRIMARY SHAFT

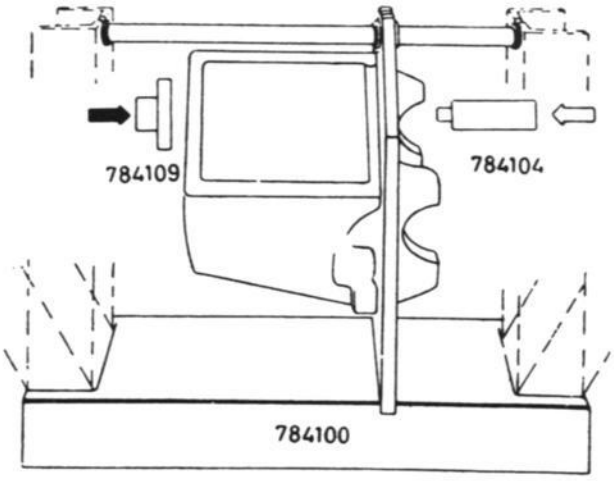

DRIVING IN PRIMARY SHAFT BEARING

Countershaft with bearings and gears

20. Place the countershaft gearwheel in its correct position with the machined part facing the clutch housing. The front press screw and tool 786134 should hold the countershaft gear and bearing in place. See illustrations.
21. **Reassemble the 1st and 2nd speed gears, the latter complete with needle bearing, spacer and bushing, and the synchronizer unit with its rings.**
22. **Lift this assembly into the transmission case, passing the countershaft, complete with the 1st speed gear needle bearing, through the rear end of the transmission case at the same time.**

As from transmission No. 108911, the 1st and 2nd speed gears are splines-mounted.

> NOTE
>
> If the rear bearing, bearing seat and reverse gear have not been removed, they may remain on the shaft during reassembly. In this case, however, the bearing must first be pressed into the seat and the rear retaining ring removed from the shaft.

23. **Place the spacer on the shaft between the 2nd speed gear and the front ball bearing. Then pass the shaft through the front bearing and into the countershaft gearwheel.**
24. Drive the countershaft in with the press screw and tool No. 784109. See fig. In so doing, make sure that the shaft splines engage with the synchronizer hub and that the shaft passes into the countershaft gear. Use the peg wrench, tool No. 784124, to turn the shaft. See fig.
    Refit the retaining ring for the rear bearing after pressing home.

> NOTE
>
> If the countershaft is refitted complete with reverse gear and bearing, use tool No. 784109. This tool is also to be used if the reverse gear and the seat with the bearing are mounted separately.

25. **Engage two gears simultaneously, e.g. 2nd and 4th, and turn the 3rd speed gear in order to align the key grooves in the countershaft and the countershaft wheel. Drive the key in with an arbor.**

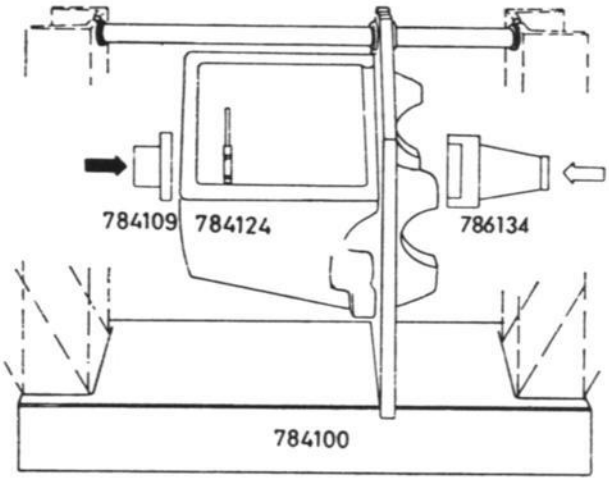

DRIVING IN COUNTERSHAFT

26. **Refit the friction wheel together with a new friction washer and star washer. Tighten the countershaft end nut with a torque of 60 ft-lb (8 kpm). The primary shaft and pinion shaft nuts, the latter left-hand threaded, should also be tightened with a torque wrench at this stage.**

    Tighten the pinion shaft nut initially with a torque of 90 ft-lb (12 kpm), back off, and retighten with a torque of 45 ft-lb (6 kpm). The primary shaft nut is to be tightened with a torque of 35 ft-lb (5 kpm).

> NOTE
>
> Check that the friction wheel is not located outside the opposing gear and that there is sufficient clearance between the primary shaft ball bearing and the countershaft gear. See "Friction brake", point 5 page 471-17.

27. **Secure the nuts on the main shaft and on the pinion shaft by bending down the tabs on the washers. If you are uncertain whether the pinion shaft is properly adjusted, leave the pinion shaft nut unlocked until this adjustment has been carried out.**

Gear-shift forks

28. Return the synchronizer sleeve and the reverse gear to the neutral position and insert the gar-shift forks. Note that springs and poppet balls must be fitted with tool 784069 before the forks are inserted in the transmission case. See fia.
29. Pass the reverse gear-shift fork in through the rear end of the transmission case and collect the tool. See fig.
30. Check that the rubber washer and plastic plug have been mounted in the end cover and the oil collector in the transmission case end.
31. Fit a new gasket. IMPORTANT! The gasket must not be glued.
32. Pass the 1st-and-2nd and 3rd-and-4th gear-shift fork shafts through the rear end, positioning them so that the forks engage with their respective shafts.
33. Do not forget to fit the previously used or newly selected shims in the end cover after coating them with a little grease so that they adhere to the end cover during assembly.
34. Collect the two fixing tools as they are pressed out at the front ends of the forks, and tighten the end cover bolts with a torque of 18 ft-lb (2,5 kpm).

> WARNING
>
> Check that the bolt opposite the reverse gear-shift fork is not too long, which would impede fork movement.

35. If necessary, adjust the gear-shift fork shafts (see fig.), so that the forks are not subjected to axial pressure when a gear is engaged. Roughly the same amount of clearance should exist between the synchronizer sleeve and the gear concerned in all gear positions.
36. NOTE: The pinion shaft should be measured and adjusted as necessary at this point. See section 473.

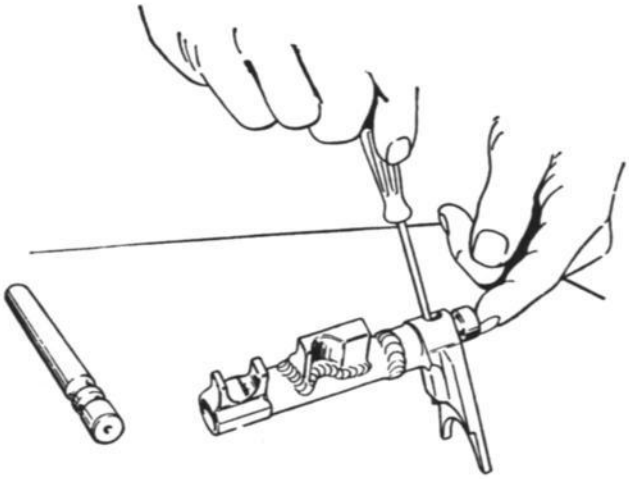

LOCATING POPPET BALL IN REVERSE SHIFT FORK WITH TOOL 784069

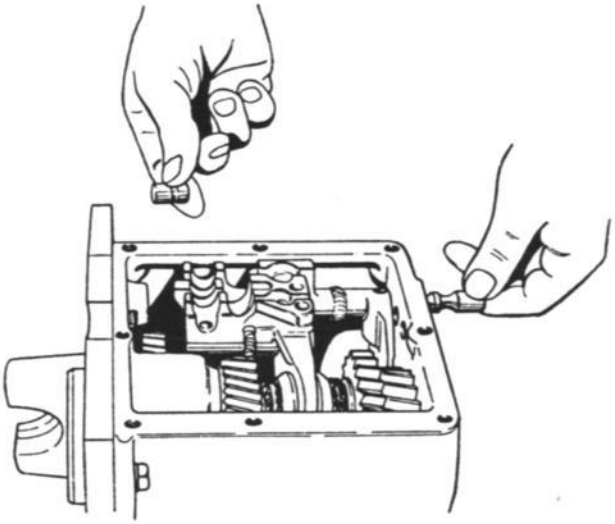

COLLECTING TOOL 784069 WHEN SHIFT FORK RAIL HAS BEEN DRIVEN IN

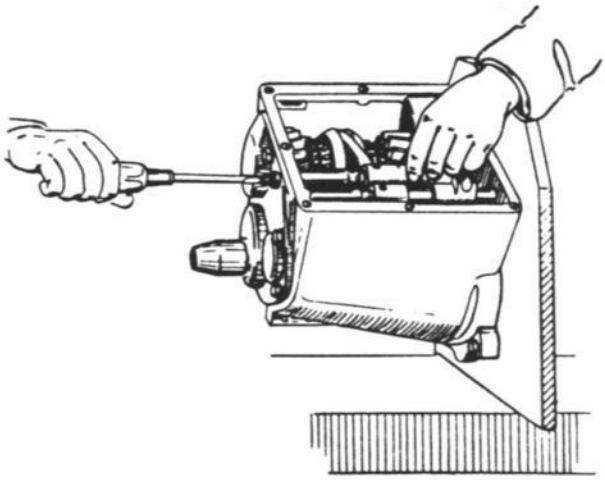

ADJUSTING THE 1ST-2ND AND 3RD-4TH GEAR SHIFT SHAFTS

Differential

37. Refit the differential assembly and spacers, and tighten the bearing cap screws with a torque of 28 ft-lb (4 kpm). NOTE! Fit the short screws in the small bearing cap.

> NOTE
>
> If the pinion shaft setting has been altered or parts of the differential assembly renewed, always check the side clearance of the bevel gear and adjust if necessary. See Section 473.

38. Refit the speedometer drive gear.
39. Coat the top cover with sealing compound and check that the three gear-shift forks in the transmission case as well as the dogs and catch in the cover are set at the neutral position. Then fit the cover on the transmission case. See fig.
40. Check the function of the gear-shift mechanism.
41. Check that the freewheel hub and an undamaged needle bearing are inserted in the primary shaft/freewheel sleeve. The hub should engage firmly when twisted to the right. Use tool No. 784068 for assembling.

> NOTE
>
> Check the clutch-shaft seal and drive-shaft seals and renew as necessary. Fit the seals so that the dust-guard lips face outwards. Fill the space between the lips with chassis grease.

42. Coat the sealing surface of the clutch housing with sealing compound and attach the clutch housing to the transmission case. Turn the clutch shaft so that it clears the differential. Make sure that the clutch shaft is not subjected to lateral stress and that the freewheel hub engages with the splines of the clutch
43. Check the sealing rings in the clutch housing and mount the two output shafts, taking care to avoid damaging the sealing rings or dislocating the retaining springs.
44. Smear the clutch-shaft splines with graphite grease and fill the unit with transmission oil.

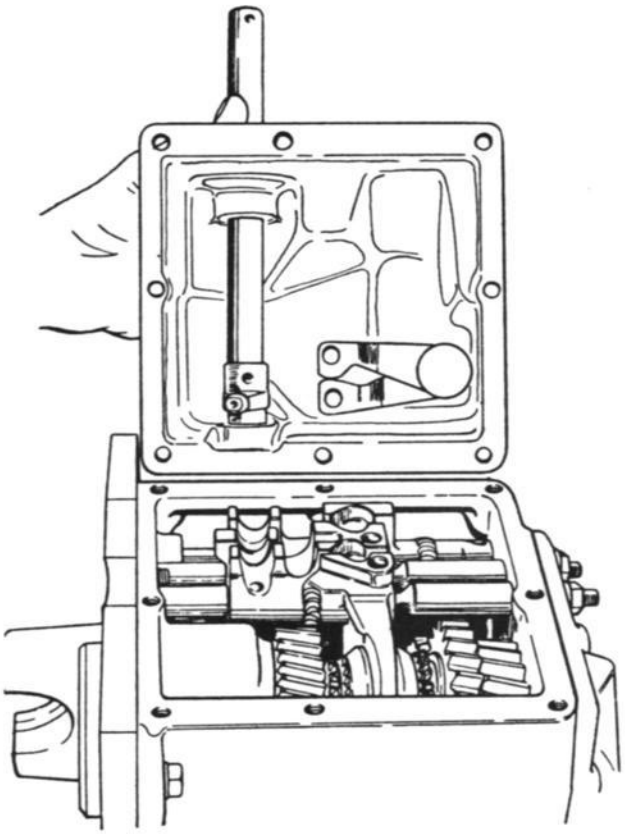

GEAR SHIFT MECHANISM AND CATCH IN TRANSMISSION CASE COVER

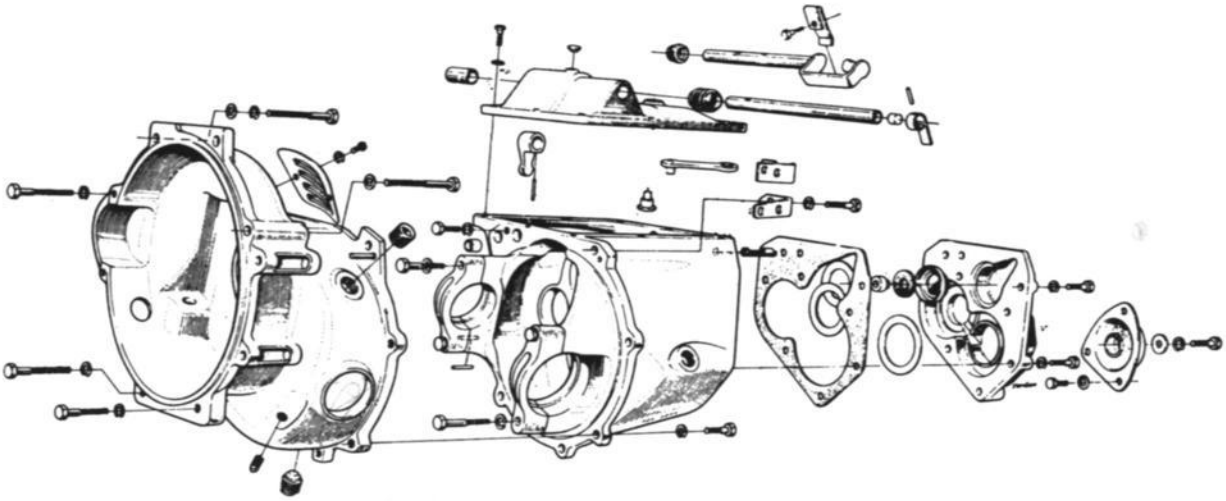

TRANSMISSION CASE, CLUTCH HOUSING AND END COVER

TRANSMISSION CASE AND END COVER

Transmission case, clutch housing

The transmission unit comprises two principal parts, viz. the transmission case proper and the clutch housing, these being correctly positioned in relation to each other by means of a locating pin. The sealing surface between the parts has no gasket, but should be coated with a suitable sealing compound.

End cover

The end cover of the transmission unit is screwed to the transmission case and sealed with a gasket. Sealing compound must not be used. Inside the transmission case there is a cup which collects the oil and passes it through a passage, by means of a rubber washer and a plastic plug, to the primary shaft. Always make sure that the rubber washer presses the plastic plug against the end cf the shaft and that the oil passage is not clogged.
Shims located inside the end cover serve to retain the outer races of the three rear bearings. See table.

A new combination of shims will have to be slected if the end cover or any of the three bearings in the rear end of the transmission case are renewed, as otherwise the bearings will not be properly secured or leakage may occur at the gasket when the end cover bolts have been tightened. Shims for the three shafts are available in three different thicknesses, viz. 0.004, 0.006 and 0.012 in. (0.1, 0.15 and 0.30 mm). The spare-part numbers etc. are listed in the table overleaf.

Shimming

1. Remove the end cover gasket, and clean the sealing surfaces of the cover and the transmission case.
2. **Make sure that all the bearings are pressed fully home.**
3. Place the measuring tool 784237 according to figure and fit-up to the plane which the end cover seals. The point of the dial indicator to be fit-up to the machined plane in one of the bearing positions. The measurement to be made without shims.

> NOTE
> Always fit a new end cover gasket before measuring.

4. Set the dial indicator to zero.
5. Place the measuring tool in the correspondling bearing in the transmission case and with the measuring point towards the rear plane of the transmission case. Read off the dial indicator.
6. Into the bearing position of the end cover, put a shim combination which corresponds to the read-off measure. A deviation of ± 0.002" (0.05 mm) is permissible.
7. Proceed in the same way for the remaining bearing positions. Check that the dial indicator be fitted in the proper hole in the measuring tool.
8. **Refit the end cover.**
9. **Tighten the screws with a torque of 18 ft-lb (2.5 kpm).**

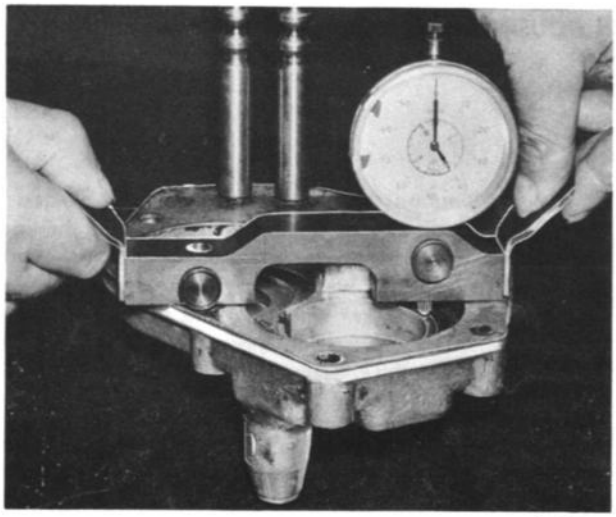

S 965

MEASUREMENT OF REAR END COVER

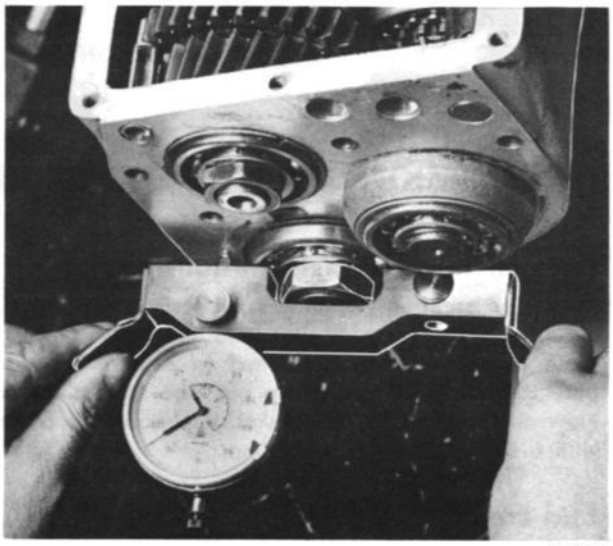

S 966

MEASUREMENT OF REAR END

MEASURING TOOL 784237

Location of shims or part	4-speed transmission		
	Spare-part No.	Thickness (in.)	Thickness (mm)
On primary shaft	708093	0.004	0.10
	708101	0.006	0.15
	708102	0.012	0.30
On counter-shaft	708094	0.004	0.10
	708103	0.006	0.15
	708104	0.012	0.30
On pinion shaft	708095	0.004	0.10
	708105	0.006	0.15
	708106	0.012	0.30
End cover	708058		
Gasket	716754		
Gasket as from 1969 model	719457		

CLUTCH SHAFT

The clutch shaft is borne up in the clutch housing in the axial direction only. A sealing ring is fitted outside the bearing.

Changing the sealing ring

1. Remove the engine and transmission unit and separate these two assemblies.
2. Remove the release bearing.
3. Pry the sealing ring out of the clutch housing, using tool 784220. See fig.
4. Obtain a new sealing ring and fill the space between the sealing lips, if these are double, with chassis grease. Then fit the ring with tool 784220, taking care to turn it in the correct direction. See fig.
5. Refit the release bearing and fit the engine and transmission case together again.
6. Reinstall the engine with transmission unit in the car.

Changing the clutch shaft or bearing

Disassembly

1. Lift out the transmission case, remove the inner universal joints, separate the clutch housing from the transmission case, remove the release bearing and the clutch shaft sealing ring.
2. Remove the retaining ring from the bearing seat inside the sealing ring, as well as the retaining ring which forms the rear stop for the locking sleeve on the shaft.

> **NOTE**
>
> This bearing, which is primarily intended to locate the shaft in the axial direction, has a large radial clearance in the bearing seat.

3. Pull the clutch shaft forwards, and collect the locking sleeve and freewheel operating fork which are now released.
4. Remove the retaining rings from the shaft and drive the bearing off.

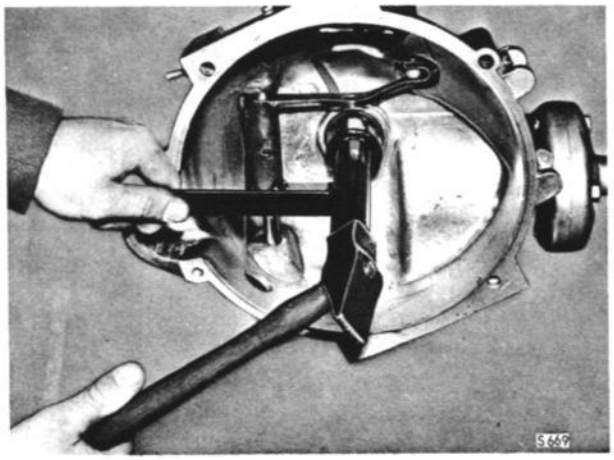

FITTING THE CLUTCH SHAFT SEAL

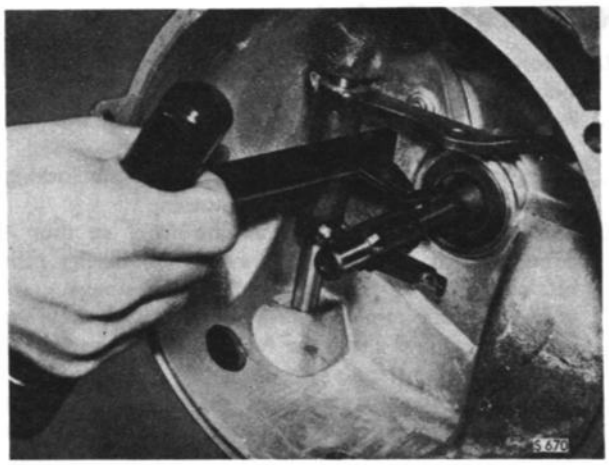

REMOVAL OF THE SEALING RING FROM THE CLUTCH SHAFT

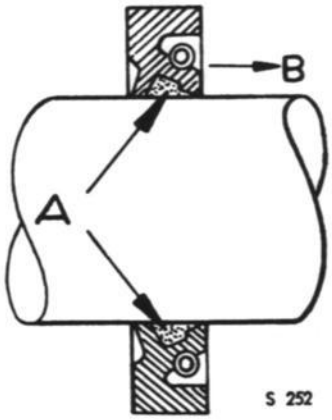

CLUTCH-SHAFT SEAL WITH DUBLE SEALING LIPS

A. The space between the sealing lips is to be filled with chassis grease.
B. Turn this side to face transmission case

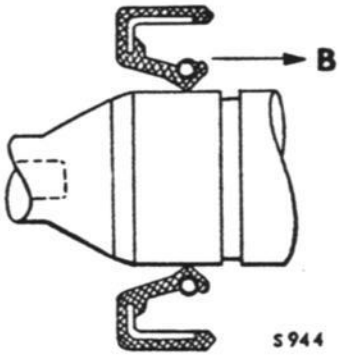

CLUTCH-SHAFT SEAL WITH SINGLE SEALING LIP

B. Turn this side inwards, towards the transmission case.

Reassembly, clutch shaft

1. Place the rear retaining ring in the clutch housing bearing seat.
2. Press the bearing onto the shaft and refit the two retaining rings. See fig.
3. Place the freewheel operating fork and the locking sleeve in position in the clutch housing.
4. Pass the clutch shaft in from the front so that it engages with the locking sleeve. Then fit the rear retaining ring on the shaft, behind the sleeve.
5. Refit the front retaining ring in the clutch housing bearing seat and check the function of the freewheel operating mechanism.
6. Fit a new sealing ring and replace the release bearing, filling the space between the sealing lips with chassis grease first. Attach the clutch housing to the transmission case and refit the universal joints.

Freewheel

Disassembly and reassembly

1. Lift out the transmission unit, remove the inner universal joints and separate the clutch housing from the transmission case.
2. Remove the clutch shaft so as to allow removal of the locking sleeve and operating fork.
3. Back off the operating lever locking screw, thus providing access to the spring, operating lever and poppet ball. See fig. Reassemble in the reverse order after renewing worn or damaged parts.

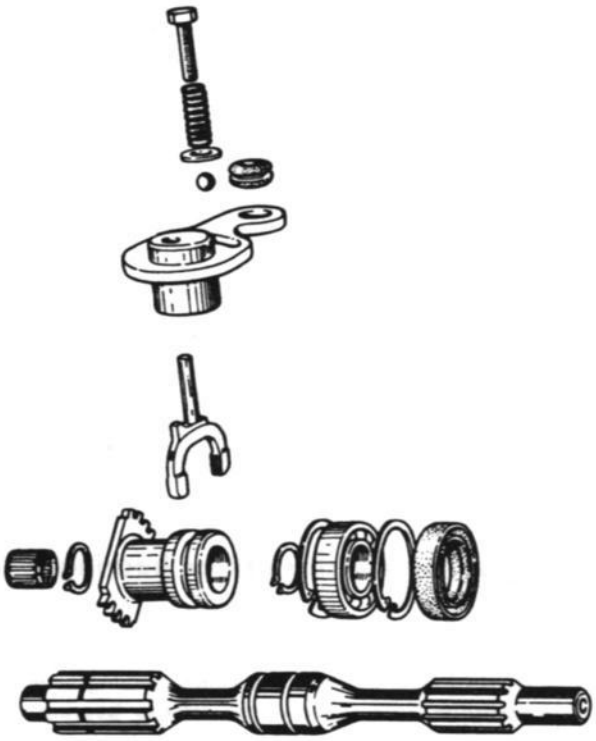

S 680

CLUTCH SHAFT WITH BEARING AND FREEWHEEL OPERATING MECHANISM

Freewheel hub

When disassembling the freewheel for repairs it is generally sufficient to fit a new hub complete with rollers. If, however, the freewheel sleeve is also defective, a new primary shaft must be fitted.

Disassembly and reassembly

1. Lift out the transmission unit, remove the inner universal joints and separate the clutch housing from the transmission case.
2. Remove the needle bearing from inside the freewheel sleeve.
3. Insert the prongs of tool No. 784068 between the freewheel hub and the sleeve, and then insert the other part of the tool in the hub splines. Twist the freewheel hub so that the rollers are firmly tensioned against the tool prongs and pull out the hub until the rollers are halfway outside the freewheel sleeve.

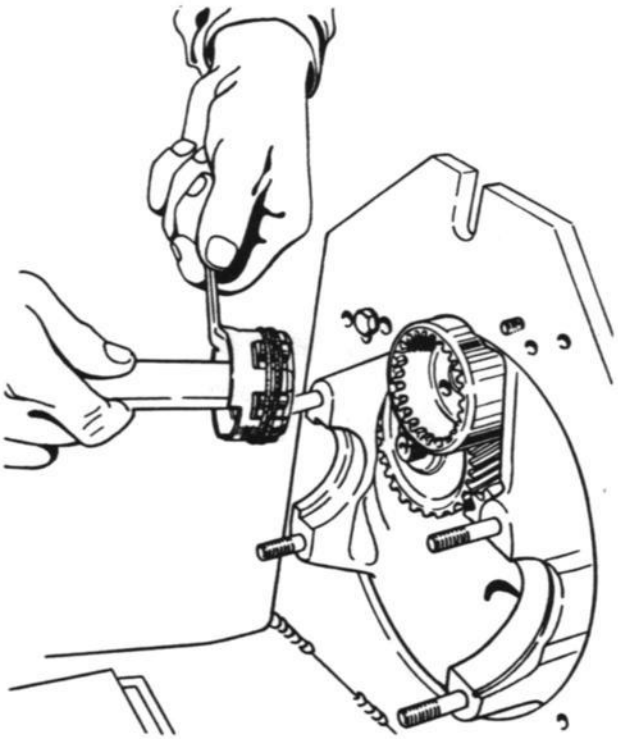

DISASSEMBLY OR REASSEMBLY OF THE FREEWHEEL HUB, USING TOOL NO. 784068

Apply a strong rubber band around the rollers and the hub can now be taken out completely. See fig. If this special tool is not available, any implement able to grip the internal splines of the freewheel hub may be used, the hub being turned anticlockwise while being drawn out far enough to allow a rubber band to be fixed round the rollers.

A spring-loaded plunger is fitted under each roller. Always check the plunger for wear, and make sure that it can move freely in its hole. Also check the spring tension.

Reassemble the freewheel hub and needle bearing in the reverse order and then refit the transmission unit.

> **NOTE**
>
> Never re-use the old rollers after fitting a new freewheel hub.

As from transmission No. 114860, the freewheel has 10 rollers and the procedures described in the following must therefore be adopted:

Removal

1. Insert tool 879032 in the splines of the freewheel hub.
2. Place sleeve 879031 over the rollers on the hub. Turning counter-clockwise, and at the same time pulling the hub into the tool sleeve. Reassembly takes place in the reverse order.

Disassembly of freewheel hub

Place a clean rag over the freewheel and tool and press the hub out of the sleeve.
Clean the hub and rollers with kerosine.

Reassembly

1. Fit sleeve 879031 in a vise — see fig.
2. Position the hub so that the figures face outwards in the freewheel sleeve.
3. Insert tool 879032 in the hub and place the hub in sleeve 879031 — see fig.
4. Refit the springs and rollers by turning the hub clockwise, pressing the roller down at the same time. See fig.
5. After having refitted all the rollers, push the hub into the closed part of the tool.
6. In fitting the hub in the freewheel sleeve, push out the hub until the rollers come half-way outside. The hub can then easily be pressed into the freewheel sleeve, turning it counter-clockwise

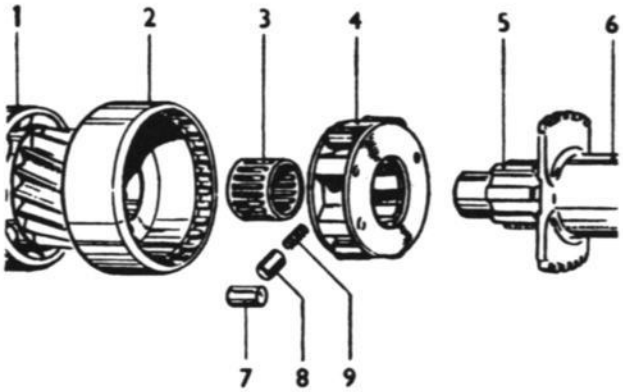

FREEWHEEL ASSEMBLY

1. Ball bearing
2. Freewheel sleeve (primary shaft)
3. Needle bearing
4. Freewheel hub
5. Clutch shaft
6. Locking device
7. Roller
8. Plunger
9. Spring

> **IMPORTANT**
>
> Fit the hub so that the freewheel engages firmly when the hub is turned clockwise.

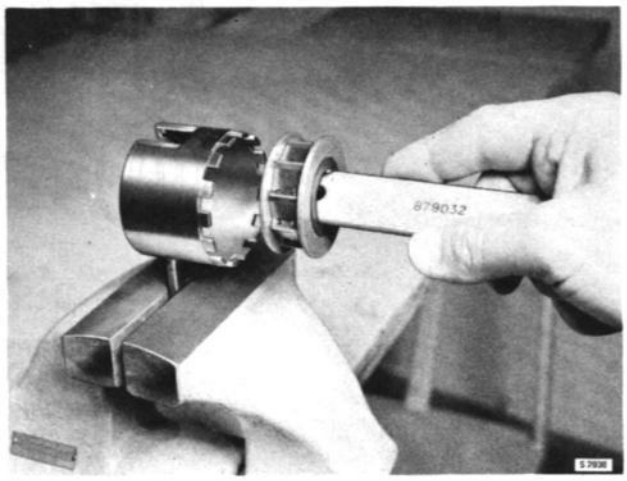

PLACING THE HUB IN THE TOOL

COUNTERSHAFT
General

The countershaft should be disassembled and reassembled in accordance with the instructions at the beginning of this section.
The 1st and 2nd speed gears on the countershaft are carried on needle bearings, whereas the reverse gear slides on splines. See fig. Between the 1st and 2nd speed gears is a synchronizer unit for these gears. The synchronizer units on the countershaft and primary shaft are identical. The synchronizer unit is obtainable only as a complete unit, excluding synchronizer rings.
The countershaft gear is provided with a friction brake which serves to take up the gearing backlash.
As from transmission No. F 108911, the 1st and 2nd speed gears are directly splined.

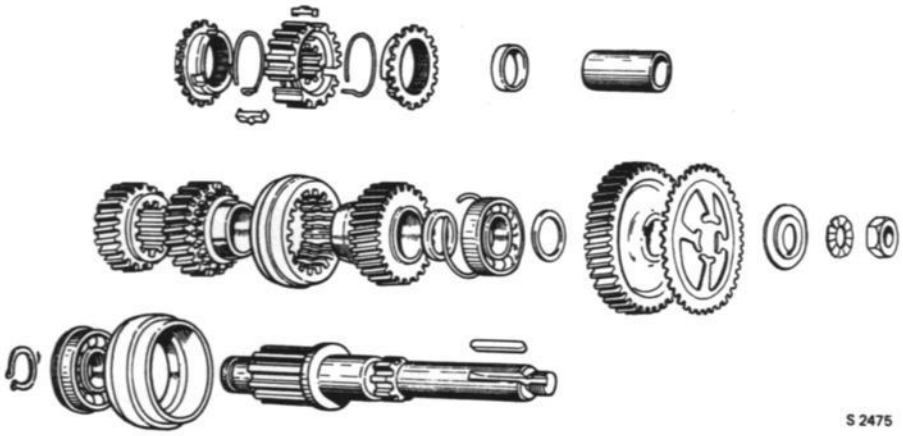

COUNTERSHAFT WITH GEARS, BEARINGS AND SYNCHRONIZER UNIT, UP TO AND INCL. TRANSMISSION No. F 108910

FRICTION BRAKE

General

The countershaft gear is fitted with a friction brake which serves to eliminate gearing backlash and thus to reduce noise.

The device comprises a friction wheel which has one tooth less than the countershaft gear, implying that the friction wheel will turn slowly in relation to the gear during the rotation. Spring-loading of the friction wheel provides the brake power required to counteract the gearing backlash against the primary shaft.

Installation instructions

When installing the friction brake, note the following points.

1. Check that the friction wheel has a smooth contact surface at the teeth, and that the spring tongues are located within the prescribed distance from the contact surface. See fig.
2. When installing the friction brake, make sure that the countershaft gear is turned so that the machined part of the hub comes out towards the friction wheel.
3. Check that the clearance on the back of the countershaft gear at the primary shaft bearing is at least 0.02 in. (0.5 mm), and if not, fit a special shim between the front countershaft bearing and the countershaft gear. See fig.
4. After fitting the friction wheel, and when the friction washer with its retaining tab has been put on, check that there is some springiness in the spring tongues.
5. Take care not to squeeze the spring tongues when tightening the countershaft gear nut. Tighten with a torque of 58 ft-lb (8.0 kpm).

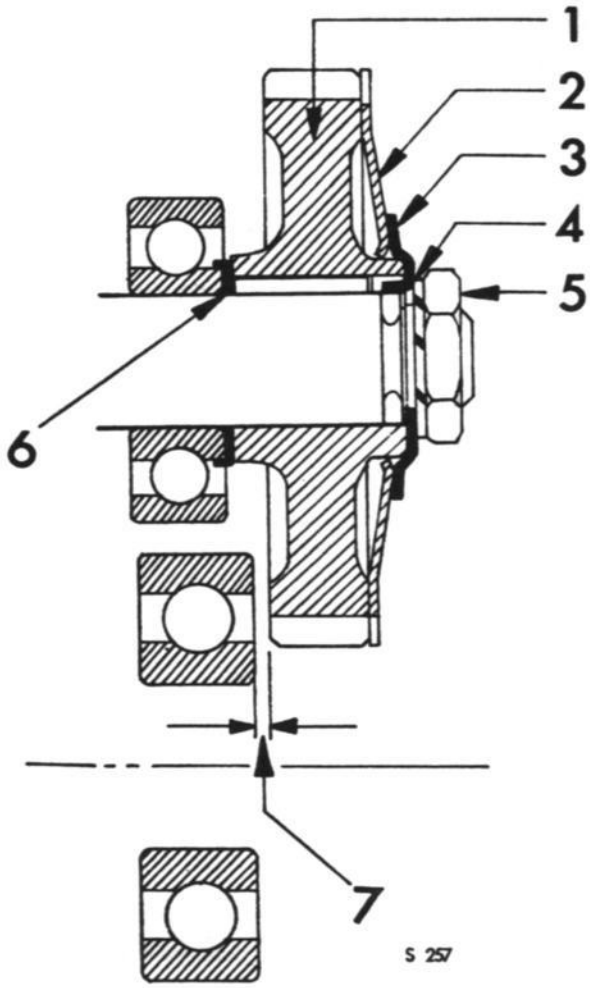

FRICTION BRAKE

1. Countershaft gear
2. Friction wheel
3. Friction washer
4. Retaining washer
5. Nut
6. Shim. To be used only if the clearance at 7 is less than 0.02 in. (0.5 mm).

FRICTION WHEEL

Dim. A = 0.146—0.157 in. (3.7—4.0 mm)

PRIMARY SHAFT

General

The primary shaft should be disassembled and reassembled in the manner described at the beginning off this Section, where it is stated that the counterhaft must be removed before the primary shaft can be disassembled. The primary shaft, which is carried in two ball bearings in the transmission case, is made in one piece with the freewheel sleeve and the countershaft gearwheel. See fig. Carried in needle bearings on the primary shaft are the 3rd and 4th speed gears. These are matched with their mating gears on the pinion shaft. The synchronizer unit is splined between the speed gears. It is available only as a complete assembly, excluding synchronizing rings.

The primary shaft has a drilled passage for lubrication of the 4th speed needle bearings and of the freewheel. Always make sure that this passage is not clogged. A thrust washer is fitted against the front primary shaft bearing and is locked by means of a pin in the shaft to prevent it from rotating.

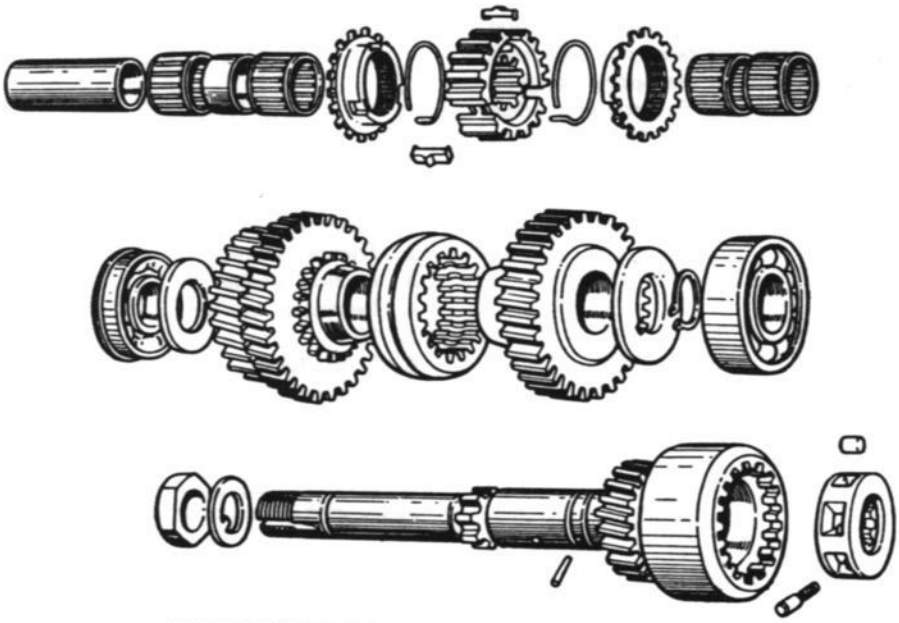

PRIMARY SHAFT WITH GEARS, BEARINGS AND SYNCHRONIZER UNIT

SYNCHROMESH, TRANSMISSION

Synchronizer rings

For satisfactory synchromesh function, it is essential that the synchronizer rings rest correctly against the tapers. If the ring tilts when pressed against the taper, lapping is called for.

The ring is lapped by applying fine-grain carborundum to the gear taper and then twisting the ring against this in both directions.

When the ring fits properly, clean the parts thoroughly to remove all traces of grinding dust.

When the synchronizer ring is installed, the clearance between it and the dog ring must be at least 0.04 in. (1 mm), which leaves an allowance for wear. The clearance, however, must always amount to at least 0.012 in. (0.3 mm).

A special synchronizer ring for the 1:st speed has been introduced, in order to make it easier to engage the 1:st speed gear when driving very slowly and when the car is standing still. When reconditioning gear boxes as from gear box No. 139984 — which was the first with 6° synchronizer cone — the said ring should be fitted. With a view easily to tell the rings apart, 3 cogs have been taken away from the new ring for the 1:st speed gear.

Synchronizing force

During a gear change, the synchronizer ring is pressed against the gear taper with a certain force, the magnitude of which depends on the tension of the synchronizer springs located inside the hub. If it is suspected that this force is incorrect, measure it as described in the following, using a spring balance or weights.

Place the gear on a flat surface with the taper facing upwards. Place the synchronizer rings and the complete synchronizer unit over it.

Lightly oil all the parts. Next, press the synchronizer sleeve down a few times, causing the ring to take up the correct position. Now put a ring or similar object on the synchronizer sleeve and place a weight on top of it. For the synchronization of the 1:st and 2:nd speed gears, the weight shall be 6 1/2 lb. (3 kg). The sleeve must not now move downwards. If, on the other hand, the load is increased by a further 9 lb. (4 kg), the sleeve should slide downwards. The force required to move the synchronizer sleeve over the dog rings on the speed gear should thus amount to 6 1/2—15 1/2 lb. (3—7 kg). It can be adjusted by stretching the circular synchronizer springs.

For the 3:rd and 4:th speed gears, the applicable weight is 13—20 lb. (6—9 kg).

In gear boxes of the old design with equal synchronization force for all the gears, it is recommended to have — in connection with reconditioning — the spring-loaded ring for the 1:st and 2:nd speed gears replaced with the harder one now used.

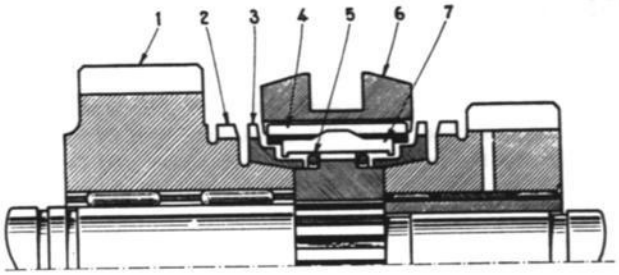

S 259

SYNCHRONIZER UNIT

1. Gearwheel
2. Dog ring
3. Synchronizer ring
4. Synchronizer hub
5. Spring-loaded ring
6. Synchronizer sleeve
7. Dog

GEAR-SHIFT MECHANISM

If the task in hand concerns the gear-shift mechanism only, it will suffice to lift the power unit out of the car and remove the transmission case top cover and the end cover.

Disassembly

1. Back off the screws holding the transmission case cover and lift off the cover.
2. Back off and remove the end-cover bolts and loosen the cover by inserting a slender screwdriver between the cover and the transmission case at both sides and carefully prying it loose.

> NOTE
>
> Proceed with great care, collecting the shims from inside the cover and noting their locations at the respective bearings.

3. Remove the end cover, which will be accompanied by two of the gear-shift fork shafts. See fig. Collect the gear-shift fork poppet balls, which are ejected when the shafts are removed.

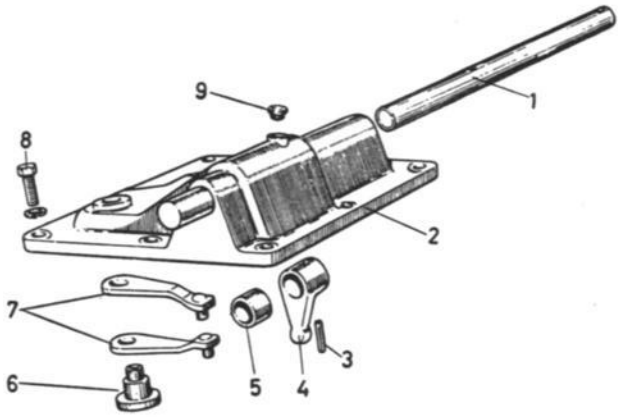

TRANSMISSION CASE COVER WITH SHIFTER MECHANISM AND CATCH ASSEMBLY,

1. Operating shaft
2. Cover
3. Tension pin
4. Shifter yoke
5. Spacer
6. Catch shaft
7. Catches
8. Screw
9. Plug

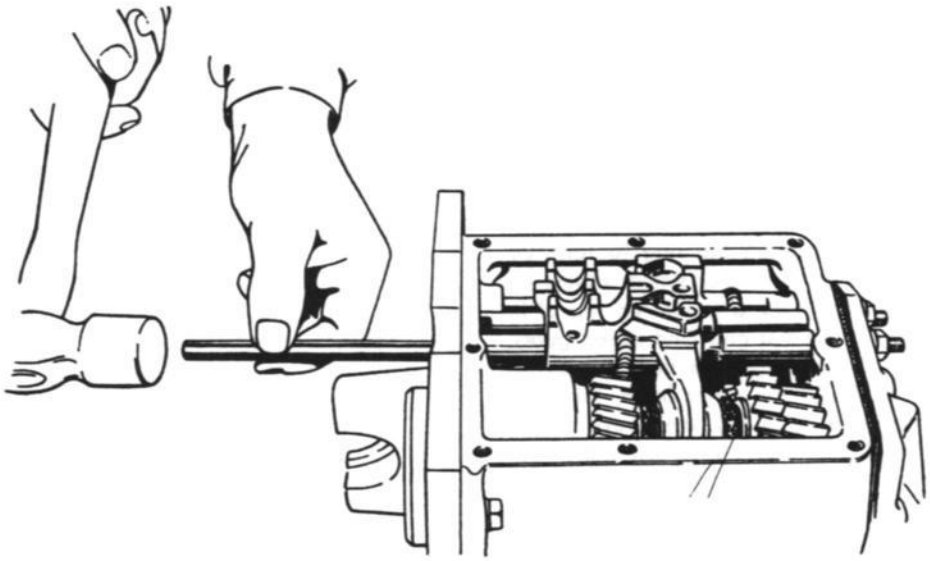

REMOVAL OF END COVER

4. Using an arbor, knock the reverse gear-shift fork shaft out from the rear. Collect the poppet ball from the fork, so that it does not drop down into the transmission case.
5. Lift out the three gear-shift forks.
6. If any of the parts fitted in the top cover — shifter yoke, shaft or catch — are to be renewed, the rivet or countersunk head in the cover must be drilled out. After reassembly, fit a rubber plug or a self-tapping screw in the hole in the cover, this hole being provided to permit the pin to be driven out of the shifter shaft.

Reassembly

Before commencing reassembly, remove all gasket fragments and all traces of old sealing compound.

1. Check positively, for instance with the aid of a magnet, that none of the poppet balls has dropped down into the transmission case.
2. Place the synchronizer sleeves and reverse gear at neutral and put in the three gear-shift forks.

> NOTE
>
> The gear-shift forks must be fitted with their springs and poppet balls before being placed in the transmission case. Hold the poppet ball in place with tool 784069. See fig.

3. Drive in the reverse gear-shift fork shaft and collect the tool as it is ejected at the front end of the fork. See fig.
4. Pass the two gear-shift fork shafts on the end cover through the end wall and into their respective forks. Don't forget to fit the end-cover gasket. Check also that the rubber washer and plastic plug are mounted in the cover.
5. Place the shims inside the end cover in the same position as prior to removal of the cover, or select a new combination of shims. See "Transmission case and end cover" in this section. Smear a little grease onto the shims to hold them in the cover, thus facilitating reassembly.

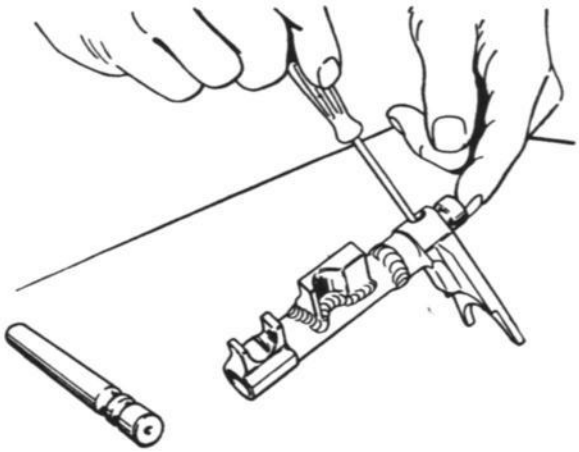

HOLDING THE POPPET BALL IN THE REVERSE GEAR-SHIFT FORK WITH TOOL No. 784069

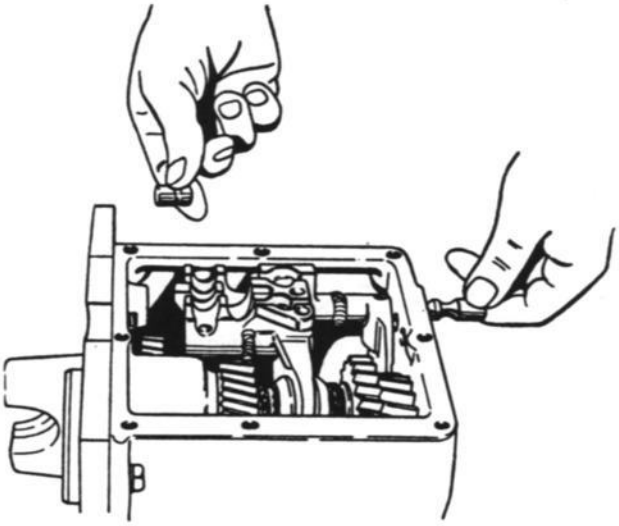

TOOL No. 784069 IS COLLECTED AS THE GEAR-SHIFT FORK SHAFT IS DRIVEN IN

6. Refit the end cover. If tools 784069 are not available, the task is facilitated by sliding one of the forks in onto its shaft (engaging one gear), thus assembling this slightly before or after the other one.
7. **Screw in the end-cover bolts and tighten with a torque of 15—18 ft-lb (2—2.5 kpm).**

> CAUTION
>
> **Make sure that the bolt opposite the reverse gear-shift fork is not too long, thereby impeding the movement of the fork.**

8. **Check the gear-shift fork shafts and adjust as necessary (see fig.), so that the forks are not subjected to axial pressure when a gear is engaged. In all gear positions, there must be a noticeable clearance, of roughly the same magnitude, between the synchronizer sleeve and the respective gear.**
9. **Place the three gear-shift forks at neutral, as well as the shifter yoke and catch in the top cover. See fig.**
10. Coat the surface of the transmission case with sealing compound. Then refit the cover and tighten up the screws.
11. **Check the function of the gear-shift mechanism.**

> NOTE
>
> The transmission case is ventilated through the operating shaft and the hole in the lower side, under the universal joint for the gear-shift rod. Make sure that this hole is not clogged, since this could lead to oil leakage at the seals.

SPEEDOMETER DRIVE GEAR

Disassembly and reassembly

1. **Disconnect the speedometer drive cable from the transmission case.**
2. Back off and remove the bearing sleeve 1, together with the spindle 2 and the speed gear 3. See fig. Collect the gasket 5.
3. **Drive out the tension pin 4, which holds the speed gear to the spindle. The speed gear, spindle and bearing sleeve can now be separated.**

Change all worn or defective parts and reassemble in the reverse order.

Shimming

To prevent oil leakage, the axial spindle clearance should be between 0.002 and 0.008 in. (0.05—0.2 mm). This clearance can be adjusted by inserting shims, 0.008 and 0.02 in. (0.2 and 0.5 mm) thick, between the speed gear and the bearing sleeve.

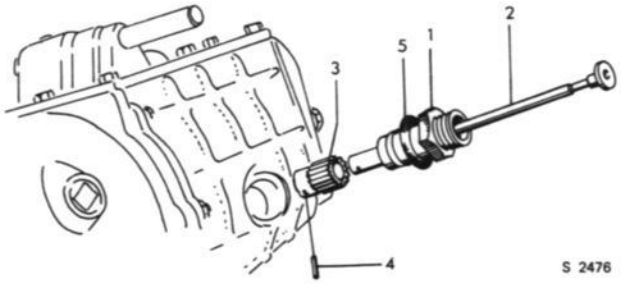

SPEEDOMETER DRIVE GEAR

1. **Bearing sleeve**
2. **Spindle**
3. **Speed gear**
4. **Tension pin**
5. **Gasket**

DIFFERENTIAL AND PINION-RING GEAR
Pinion shaft and ring gear, general

The pinion shaft and differential ring gear should be disassembled and reassembled in the manner described in Section 471, where it is explained that the countershaft must be removed first, followed by the primary shaft, before the pinion shaft can be disassembled. Te pinion shaft is carried in a roller bearing and a double-row ball bearing which constitutes the axial bearing. The pinion shaft carries the keyed 3rd gearwheel, while the 4th gearwheel is simply press-fitted. The speedmotor drive is located between the gearwheels. See fig. The gears are matched with the corrsponding garwheels on the primary shaft and in course of assembly care must be taken to ensure that the matching numbers face the same way on both pinion shaft and primary shaft.

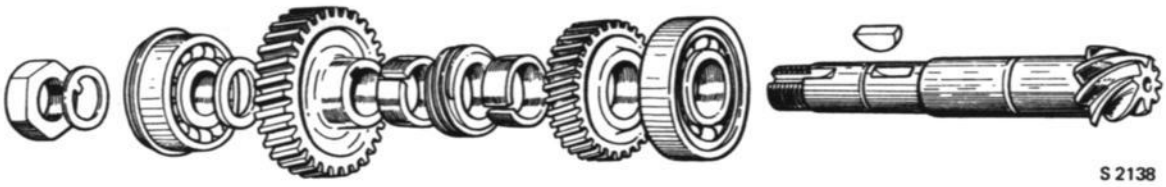

PINION SHAFT WITH BEARINGS AND GEARS, UP TO AND INCLUDING CHASSIS NO. 470.000 and 52.000 RESPECTIVELY.

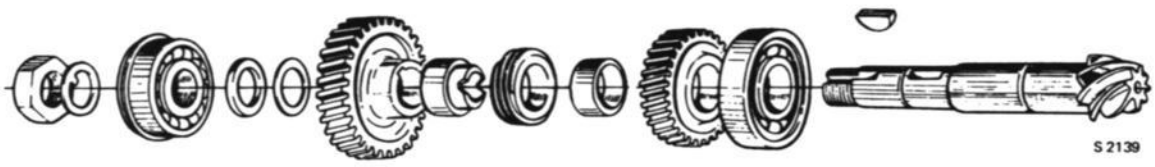

PINION SHAFT WITH BEARINGS AND GEARS, AS FROM CHASSIS NO. 470.001 and 52.001 RESPECTIVELY.

noise and the most favourable setting for quiet running has been measured. Measurements of particular importance for the pinion and ring gear are the distance between the end face of the pinion and the center of the ring gear, and the gearing backlash. See fig. These measurements, as well as the matching numbers, are stamped into the parts concerned in conjunction with the noise test. When assembling the pinion and ring gear, these measurements must be adjusted very accurately with shims and a special measuring tool. The pinion shims are located by the rear pinion shaft bearing, and the shims for the differential ring gear by both bearings.

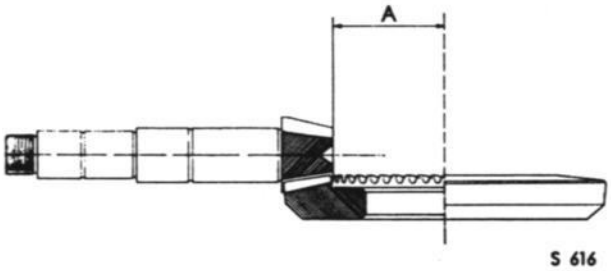

ADJUSTMENT OF DISTANCE BETWEEN PINION END FACE AND CENTER OF RING GEAR BY SHIMMING THE PINION SHAFT

The measurement A to be adjusted by shimming the pinion shaft

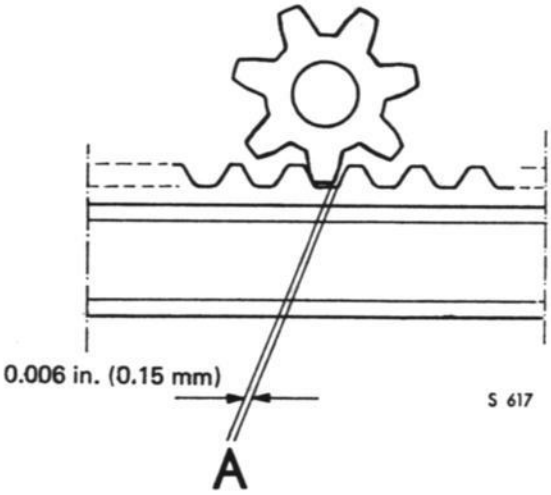

GEARING BACKLASH IS ADJUSTED BY SHIMMING THE DIFFERENTIAL

The backlash A = 0.006 in. (0.15 mm) is to be adjusted by shimming the differential bearing

ADJUSTMENT OF PINION

General

To facilitate adjustment of the distance between the pinion and the center of the ring gear, certain data are stamped into the end face of the pinion. As different makes of final gear are used, the markings vary as follows:

S 618

THE PINION END FACE

+3 = Measurement for pinion adjustment.
R913 = Matching number, also to be found on ring gear.
0 = Pinion is not displaced, but the pinion shaft is directed towards the center of the ring gear. All pinions are marked with an "0", and this information has no influence on the adjustment.

IMPORTANT

Before disassembling the transmission unit, always measure the relative positions of the pinion and ring gear, in order to determine whether the adjustment has possibly been incorrect. If the pinion and ring gear have been used only for a short mileage (less than 6000 miles or 10000 km), the unit can be readjusted. However, after longer mileages, when the gears will have become worn in at a certain position, adjustment should be made to agree with the readings obtained prior to disassembly.

Remedys before measuring

During all measurements of the pinion setting, the following points must be observed.

1. The pinion shaft end nut must be correctly tightened, first with a torque of 85 ft-lb (12 kpm), then with a torque of 45 ft-lb (6 kpm).
2. The transmission case end cover must be shimmed, fitted with its gasket, and its bolts tightened with a torque of 18 ft-lb (2.5 kpm). For shimming of end cover, see Section 471.
3. The differential must be removed to allow application of the measuring tool 784146, which comprises a jig carrying a dial indicator. A ground gage block is provided for adjustment of the dial indicator. The gage block is placed against the setting lugs of the tool, and the distance between these and the center of the ring gear is always 60.94 mm. The tool is suitable for use in all types of transmission cases, and therefore has different stops to suit the various diameters of bearing seats. To measure the pinion setting, proceed as follows:

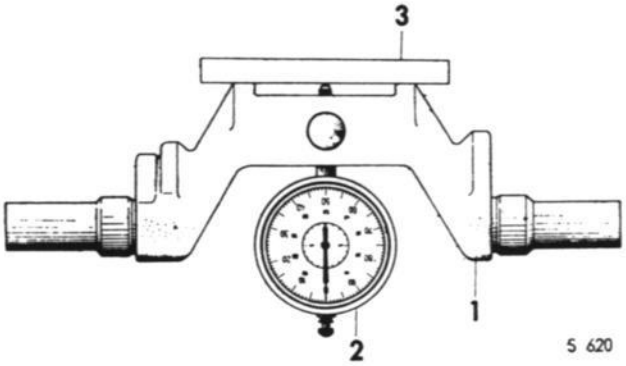

ZEROING THE DIAL INDICATOR

1. Measuring tool 784146
2. Dial indicator
3. Gage block

Measuring

The dial indicator has two scales, one of which is graduated counter-clockwise and gives a lower reading when the measuring point is pressed in. This scale must always be used.

Place the ground gage block against the two setting lugs and against the measuring point. Now zero the dial indicator, i.e. both the hands shall point to zero according to figure. Then carry out the measurement as follows: Locate the dial indicator in one of the measuring tool holes A, B as follows:

A = transmission case of cast iron
B = transmission case of aluminium

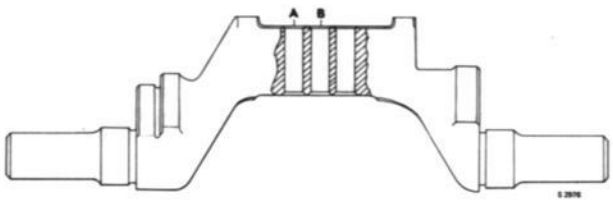

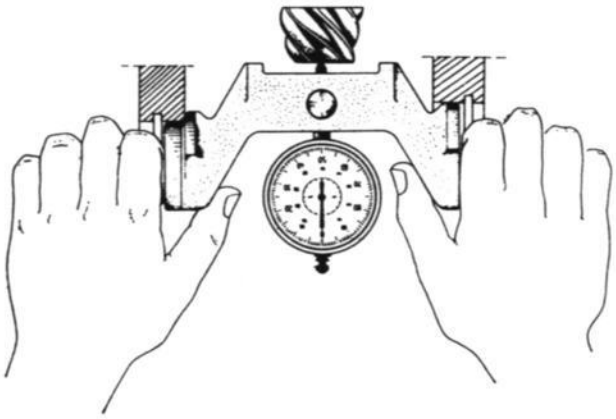

PLACING OF MEASURING TOOL WHEN MEASURING

1. Check the dial indicator so that the hands point at 0.00 when the measuring point rests against the gage block. See fig.
2. Locate the measuring tool in the differential bearing seats with the measuring point in contact with the ground face of the pinion and take a reading. See fig.
3. When the pinion is correctly adjusted, the dial indicator should show the same figure, in hundredths of a millimeter, as that marked on the pinion, with a permissible deviation of ±0.05 mm.
   Note that the dial-indicator scale which goes counter-clockwise must be used, i.e. + is counter counter-clockwise and — clockwise.

Example of dial-indicator reading when adjustment is correct

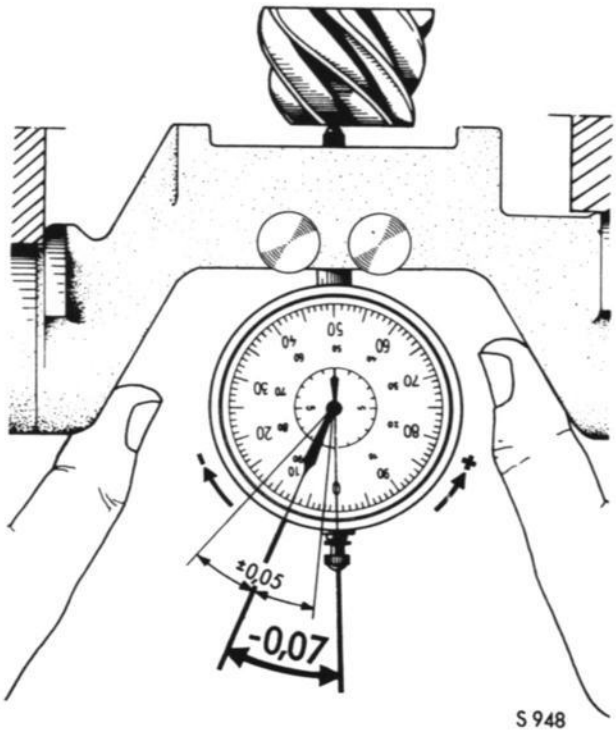

If the pinion is marked —7,
the indicating hands should point to —0.07 mm.
On this value a deviation of ±0.05 mm is permissible.

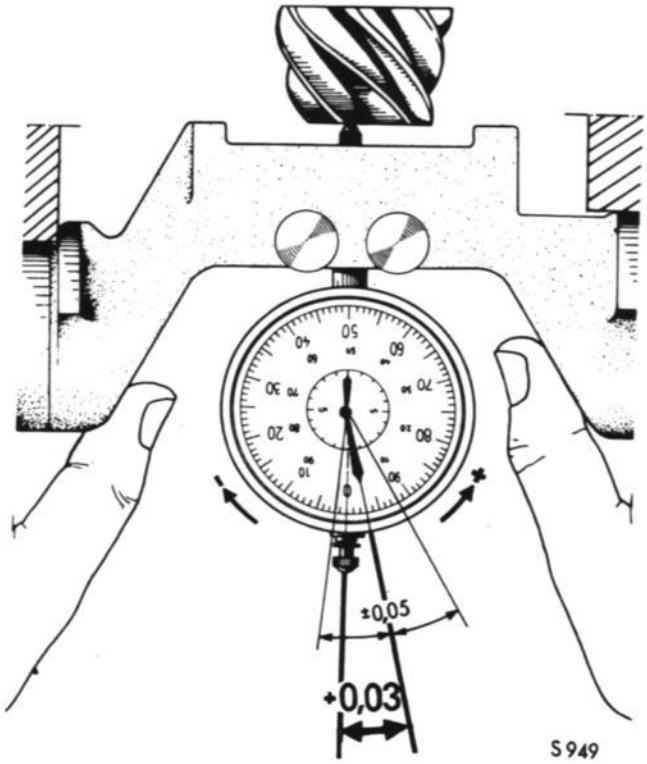

If the pinion is marked +3, the indicating hands should point to +0.03. On this value a deviation of ±0.05 mm is permissible.

Shimming

If the measured value deviates from the correct one more than permitted by the tolerance, the pinion shaft must be adjusted.

The adjustment is to be made with spacer and shims, which shall be placed between the rear thrust bearing and the 2nd-and-reverse gear. See fig.

When doing this, always place the shims next to the bearing and the spacer against the gear. The spacers are available in two thicknesses and the shims can be had in three different thicknesses. See table. When adjusting, take only one of the spacers plus maximum three shims in a suitable combination. This covers the adjustment range from 3.1 mm up to 4.2 mm with intervals of 0.05 mm.

NOTE! If the gear box is equipped with the new, rear pinion bearing with split inner ring, the spacer washer has to be placed next to the bearing.

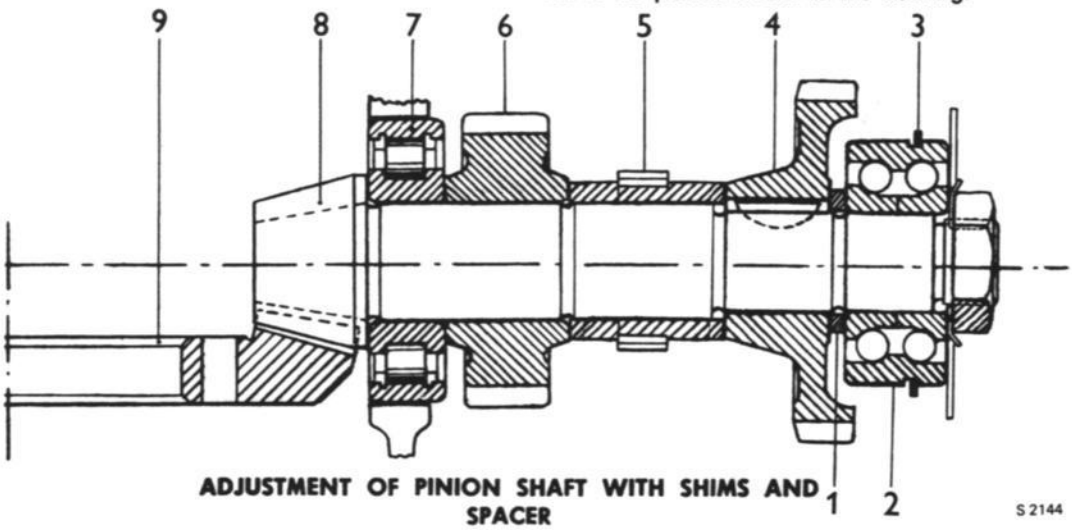

ADJUSTMENT OF PINION SHAFT WITH SHIMS AND SPACER

1. Spacer and shims
2. Ball bearing
3. Lock ring
4. 3rd gear
5. Speedometer drive
6. 4th gear
7. Roller bearing
8. Pinion gear
9. Ring gear

Gearbox	Location	Spacers		Shims	
		Thickness mm	Spare part No.	Thickness mm	Spare part No.
Up to and including model 1967	Pinion shaft between thrust bearing and gear	3.1 3.6	782207 782215	0.1 0.15 0.3	782208 782209 782210
As from model 1968		3,1 3,6	783953 783954		

When shimming, proceed as follows:

1. Remove the end cover and back off the pinion shaft end nut.
2. Pull out the pinion shaft axial bearing, using puller 784115. The front press screw can be used to support the shaft. See fig.
3. Remove the spacer and shims.
4. Change the shimming as per the following rules:
   If the dial indicator reading was too high, increase the thickness of the shims combination.
   If the dial indicator reading was too low, reduce the thickness of the shims combination. Note that + is counted counter-clockwise and — clockwise. The amount by which the shimming thickness is to be increased or decreased is the same as the difference between measured and true values.
5. Having selected the correct combination of shims, place the spacer, followed by the shims, on the pinion shaft. Drive the pinion shaft bearing in with tool 784122, using the front press screw to support the shaft.
6. Fit the retaining ring with its tab facing outwards. Then tighten the pinion shaft end nut, first with a torque of 85 ft-lb (12 kpm) and then with 45 ft-lb (6 kpm). Secure the nut.
7. Refit the end cover and appurtenant shims. Tighten the end cover screws with a torque of 18 ft-lb (2.5 kpm).

As from transmission No. F 39522 and 274571 respectively, a new rear pinion bearing with a split inner ring has been introduced.
This new bearing has to be disassembled in two stages. The bearing is pulled off the shaft as before with puller 784115, but the inner part of the inner ring now remains on the shaft. It can subsequently be removed with puller 786052.
The diameter of the spacer has been decreased to simplify removal of the inner ring.
In reassembling, place the loose inner ring on the shaft, followed by the main part of the bearing. Then press the entire bearing into place in the usual manner.
Note that in this version the shims are to be located between the washer and the gear.

Rechecking

After shimming, refit the measuring jig in the differential bearing seat and check that the dial indicator gives the correct reading. (±0.05 mm) Readjust if necessary.

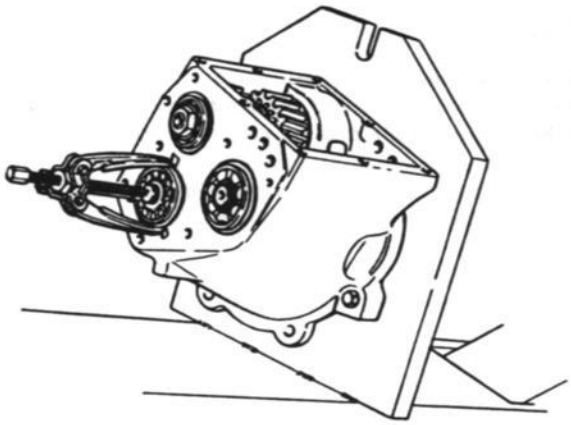

REMOVING PINION SHAFT BEARING WITH PULLER 784115 (4-SPEED TRANSMISSION)

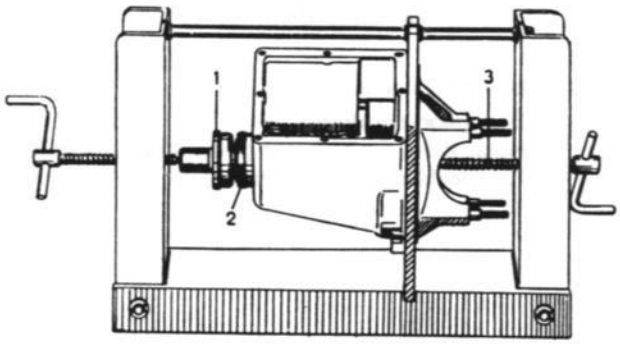

S 691

DRIVING IN PINION SHAFT THRUST BEARING

1. Tool 784122
2. Bearing or bearing seat
3. Press screw for supporting the shaft

ADJUSTMENT OF RING GEAR BACKLASH

General

During adjustment and measurement of ring gear backlash, the pinion shaft end nut must always be tightened to the correct torque and the end cover must be properly shimmed and tightened to the correct torque.
To facilitate adjustment of ring gear backlash, certain data are stamped into the ring gear as per the following:

Check the backlash at 4 points round the circumference of the ring gear. The deviation from the indicated value must not exceed ±0.05 mm. The gear ring backlash can be adjusted to the correct value with spacers and shims. There are two different thicknesses of spacers and three of shims for each bearing — see table below. For shimming, use one of the spacers together with up to three shims in different combinations.

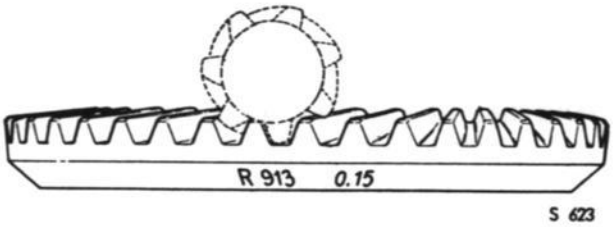

MARKS ON RING GEAR

R913 = Matching number
0.15 = Ring gear backlash.
Note! If this figure is not given, 0.15 mm applies. The backlash may be measured at any point.

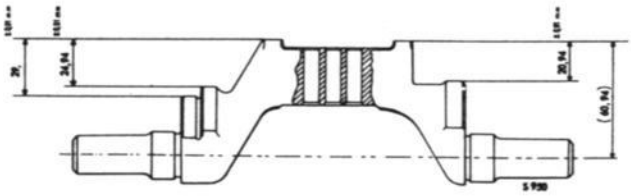

WHEN CHECKING MEASURING TOOL 784146, OBSERVE THE MEASURES INDICATED ABOVE

Checking the measuring tool

The measuring tool is made with great precision. It should therefore be handled with great care, in order to avoid blow marks and/or deformation. If the tool is suspected damaged, check its measures, so that reliable results are obtained when using it. To this effect check the measures indicated, see figure.

Location by differential bearings	Spacers			Shims		
	Thickness in.	(mm)	Spare part No.	Thickness in.	(mm)	Spare part No.
Right	0.13	(3.4)	782489	0.004	(0.1)	782491
	0.15	(3.9)	782490	0.006	(0.15)	782492
				0.012	(0.3)	782493
Left	0.13	(3.4)	781391	0.004	(0.1)	781392
Left	0.15	(3.9)	782212	0.006	(0.15)	781398
				0.012	(0.3)	781399

Measuring and shimming.

1. Locate the differential and ring gear assembly in their bearing seats.
2. Insert a suitable spacer at the smaller bearing seat and then fit a suitable combination of shims between the spacer and the bearing so that roughly the correct amount of backlash is obtained.
3. Insert the spacer and shims for the other bearing seat, again with the shims nearest the bearing. See fig. Select a suitable total thickness which ensures that there will be no axial play on the differential side, but which does not give rise to tension between the bearings. It should be possible to drive the spacer into its position with thumb pressure.
4. Fit the bearing caps and tighten the bolts with a torque of 29 ft-lb (4 kpm).

> NOTE
> The screws are of different lengths for the left and right sides.

5. Measure the backlash with the dial indicator screwed into the holder belonging to the transmission case fixture. See fig. Fit the indicator with a short measuring point and align it at right angles to the tooth flank at the ring gear periphery.
6. Lock the pinion shaft by passing a screwdriver or other suitable implement into the aperture for the speedometer drive. Turn the ring gear gently back and forth while checking the backlash reading. The gear teeth must be dry and the measured backlash must not differ by more tran ±0.002 in. (0.05 mm). Check the backlash at 4 more points on the ring gear.
7. If the backlash does not agree with the figure 0.006 in. (0.15 mm) on the ring gear, remove the bearing caps and select new combinations of spacer and shims. Note that if shims are removed from one side, the same thickness must be added on the other side.

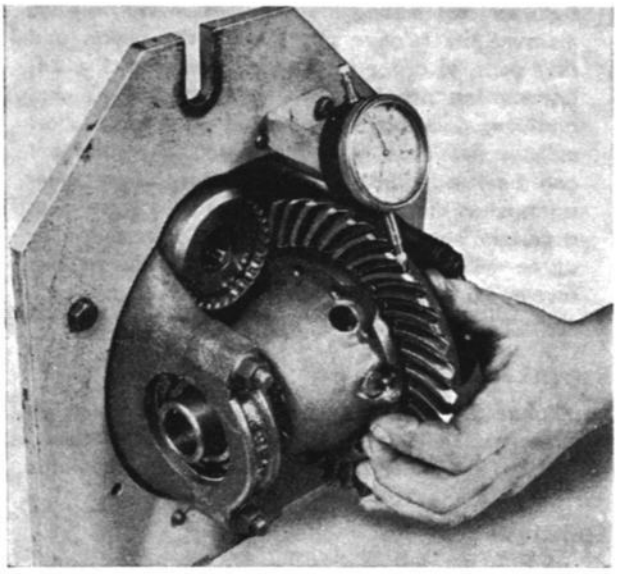

MEASURING RING GEAR BACKLASH

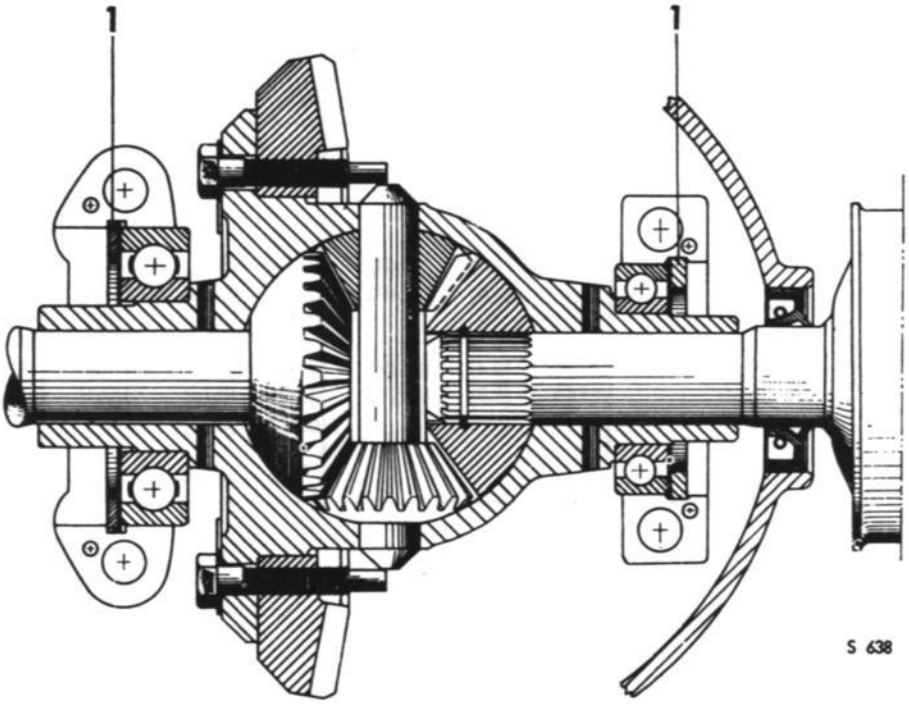

LOCATION OF SPACER AND SHIMS

1. Spacers and shims

A change of 0.004 in. (0.1 mm) in shimming results in a change of 0.002 in. (0.05 mm) in backlash.

8. Recheck the adjustment after any change of shimming.

> **IMPORTANT**
>
> **Before disassembling the transmission unit, always measure the relative positions of the pinion and ring gear, in order to determine whether the adjustment has possibly been incorrect. If the pinion and ring gear have been used only for a short mileage (less than 6000 miles or 10000 km), the unit can be readjusted. However, after longer mileages, when the gears will have become worn in at a certain position, adjustment should be made to agree with the readings obtained prior to disassembly.**

Replacement of axial bearing

To change the rear axial bearing on the pinion shaft, separate the clutch housing from the transmission case and mount the latter in the transmission case fixture.

Removal

1. Remove the differential and record the position of the pinion.
2. Remove the transmission case cover and end cover.
3. Engage two gears simultaneously and back off the lefthand-threaded, pinion shaft end nut.
4. Withdraw the pinion shaft axial bearing with puller 784115. Then, if the bearing is split, remove the inner ring from the shaft with tool 786052, using the front press screw to support the shaft.

Installation

1. Drive the bearing into its sleeve.
2. Make sure that the shims and spacer have been fitted, with the spacer closest to the bearing, and drive the bearing into the transmission case with tool 784122. If a split bearing is to be fitted, place the inner ring, followed by the outer ring with rollers, on the shaft and then drive the bearing on with tool 784122. If a bearing of earlier design was fitted and is to be replaced by a bearing with a split inner ring, it will also be necessary to change the spacer. Use the front press screw to support the shaft.

3. Tighten the pinion shaft end nut initially with a torque of 85 ft-lb (12 kpm), and then again with a torque of 45 ft-lb (6 kpm).
4. As the new axial bearing will have changed the adjustment of the pinion as well as the pinion shaft shimming in the end cover, the end cover shimming must be readjusted first. See Section 471.
5. Refit the end cover and tighten the bolts with a torque of 18 ft-lb (2,5 kpm).
6. Measure and adjust the position of the pinion as described in this section.
7. After final adjustment, secure the pinion shaft end nut. Then refit the cover and tighten the bolts finally with a torque wrench.
8. Refit the differential and transmission case cover with the appurtenant shims. Remove the transmission case from the fixture and refit the clutch housing to it.

DIFFERENTIAL

Disassembly

It is not necessary to fix the transmission case in the fixture in order to disassemble the differential, although doing so would facilitate checking and adjustment of ring gear backlash.

NOTE

To renew parts inside the differential assembly, only the two long ring-gear bolts which lock the differential pinion shaft need be removed. The shaft and the pinions can then be removed without disassembling the differential.

1. Remove the universal joints and clutch housing.
2. Remove the differential bearing caps and lift out the differential assembly. Collect the spacers from outside the bearings.
3. If necessary, drive both bearings off the differential assembly.
4. Back off and remove the ring gear bolts and remove the ring gear.
5. Drive out the differential pinion shaft.
6. Remove the pinions and gearwheels from the differential. Remove the retaining rings or circlips from the differential wheels.

Reassembly

IMPORTANT

The ring gear must not be changed without fitting a new pinion shaft, since these two parts are supplied in matched sets.

1. Change all worn or defective parts.
2. Fit circlips in the two differential wheels.
3. Locate the wheels and pinions in the differential casing and drive the differential pinion shaft in.
4. Refit the ring gear and tighten the bolts with a torque of 18 ft-lb (2.5 kpm).
   Note that the two long screws also serve to lock the differential pinion shaft axially — see fig.
5. Secure the ring gear bolts with retaining rings and then press the bearings on if they have been removed.
6. Position the differential in its bearing seats and place spacers and shims at the outside of the bearings. Check that the differential has no axial play and that the bearings are not jammed. Use thumb pressure only when fitting the spacer.
   If any part affecting the total width of the differential assembly has been renewed, for instance a bearing, the ring gear backlash must be checked. The backlash is adjusted by changing the combination of spacers and shims as described under "Pinion shaft and ring gear".
7. Refit the two bearing caps and tighten the screws with a torque of 29 ft-lb (4 kpm). — Reassemble the clutch housing and universal joints.

NOTE

As from transmission No. F 68929, a new diffirential casing and new differential wheels, retaining rings and inner drivers have been introduced. The new parts have a somewhat larger diameter and a larger number of lands in the splined joint and are thus not interchangeable with the old ones.

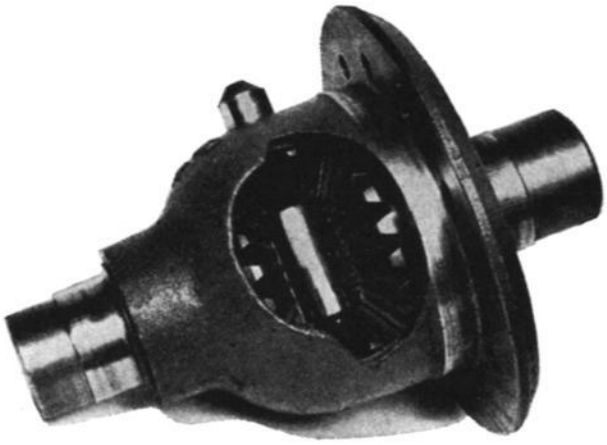

DIFFERENTIAL

INNER UNIVERSAL JOINT

General

The inner universal joint comprises a driver which is borne up in the differential casing and splined to the differential wheels, to which it is locked by means of an elastic retaining ring located in a groove in the differential wheel. When the driver is to be removed or refitted, the retaining ring springs out in its groove.
Externally, the driver is in the form of a fork in which a T-shaped drive shaft is carried in needle bearings. When the car is in motion, the shaft is axially slidable and also articulated. The universal joint is lubricated with SAAB Special Grease and is protected by a rubber boot. Lubrication is only necessary after reconditioning or if the universal joint has been removed for some other reason.
Always use SAAB Special Grease.

Disassembly of middle shaft and inner universal joint

1. Jack up the front part of the car and remove the wheel.
2. Detach the brake housing, and hang it up by the wheel house so that the brake hose will not get damaged. Remove the wheel hub and brake disc.
3. Remove the large clip holding the rubber boot in position.
4. Remove the upper ball joint from the steering arm and the lower ball joint from the steering knuckle.
5. Open up the inner universal joint and fit a cover, tool 731762 in the rubber boot to keep the needle bearings in and dirt out. On the inner driver, fit protective cover 783846.
6. Withdraw the middle shaft together with the rubber boot through the wheel house. See fig.
7. Next, possibly tap the driver off the transmission case, using an arbor, and remove it. See fig.
8. If the rubber boot at the inner or outer universal joint needs to be changed, separate the shaft from the outer joint. See "Outer universal joint".
   The rubber boots can then be removed from the shaft.
9. If the sleeve of the inner driver is worn, you may — with a suitable tool — press off the sleeve from the driver, and turn it 90° or fit a new sleeve. Press until the sleeve flushes with the end surface of the driver.

Reassembly

1. Check that the inner driver is clean and then fill the needle-bearing grooves with SAAB Special chassis grease. The correct quantity of grease will be obtained if the driver is filled up.
2. Refit the inner driver by sliding it into the transmission case.
   Check that the retainer in the differential gear engages correctly.
3. Pass the rubber boots onto the middle drive shaft and fit the shaft and rubber boot to the outer universal joint. See "Outer universal joint".
4. Apply SAAB Special Grease to the needle bearings and fit these to the shaft journals.

NOTE

As from transmission No. F 68929, a new differential casing and new differential wheels, retaining rings and inner drivers have been introduced. The new parts have a somewhat larger diameter and a larger number of lands in the splined joint and are thus not interchangeable with the old ones.

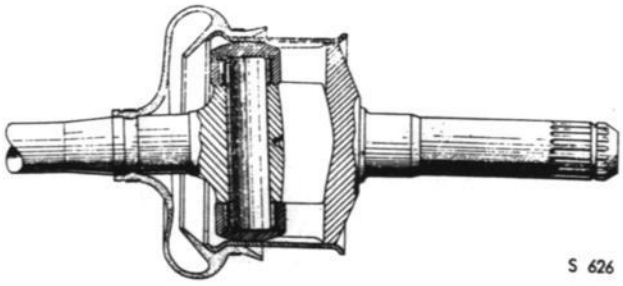

INNER UNIVERSAL JOINT

REMOVAL AND INSTALLATION OF INNER DRIVE SHAFT

Fit the cover, No. 731762, in the rubber boot to protect the needle bearings and to prevent them from falling out. Then pass the shaft and rubber boot in through the wheel house.

5. Remove the cover from the rubber boot and pass the shaft and needle bearings into the inner driver. Then refit the rubber boot and the clips.
6. Refit the upper and lower ball joints to the steering knuckle.
7. Refit the brake disc and wheel hub, as well as the brake housing and friction pads.
8. Refit the wheel.

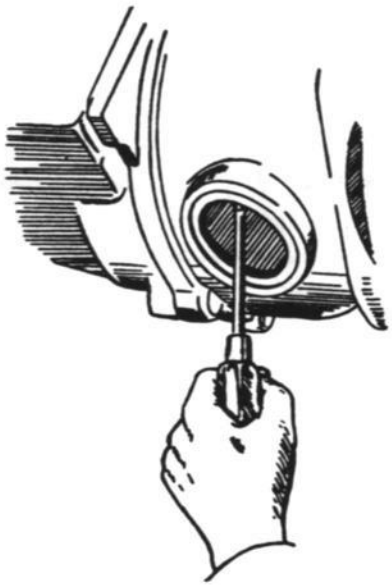

REMOVAL OF SEALING RING AROUND OUTPUT SHAFT

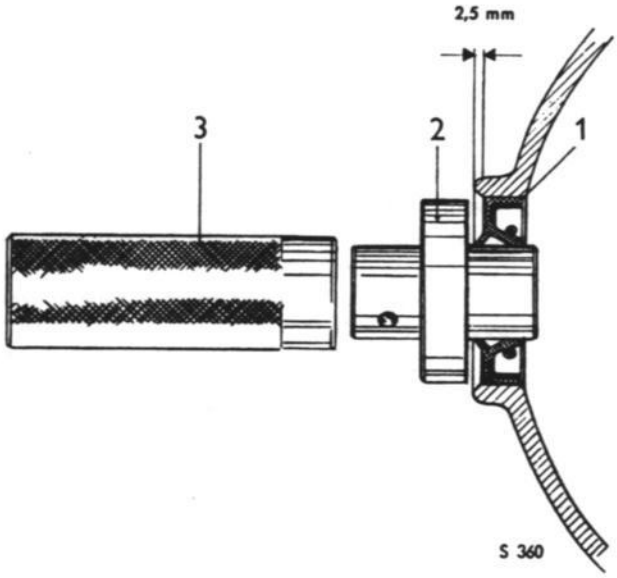

FITTING A NEW SEALING RING

1. Sealing ring
2. Arbor 784033
3. Handle 784030

Removal of inner driver
Replacement of sealing ring

1. Detach the steering knuckle from the upper and lower ball joints and hang it up to prevent damage to the brake hose.
2. Drive the inner universal joint out of the transmission case with the aid of an arbor, and pull the shaft out without disassembling the inner universal joint.
3. Prise the sealing ring off with a screwdriver, making sure that it is accompanied by its spring.
4. Drive a new sealing ring in, using arbors 784033 and 784030. The ring must be driven in 0.1 in. (2.5 mm) as shown in the figure in order to ensure sufficient clearance.
5. Refit the universal joint to the transmission case and connect the ball joints to the steering knuckle.

IMPORTANT

Before refitting the universal joint, fill the space between the lips of the sealing ring with SAAB Special chassis grease. Take great care when reassembling the universal joint, so that the splines do not damage the seal.

Replacement of broken inner driver

If the pin for the inner driver has broken inside the transmission case, a special tool can be used to remove it without any necessity of disassembling the transmission unit.

1. Remove the defective inner driver. On the opposite side, remove the middle shaft and outer universal joint.
2. Using the driving arbor, No. 784142, first tap out the broken pin with the short part of the tool, inserting it from the side opposite that where the broken pin is located. Then reverse the tool and tap the pin out completely with the fork-shaped part. See fig.
3. Fit new parts.

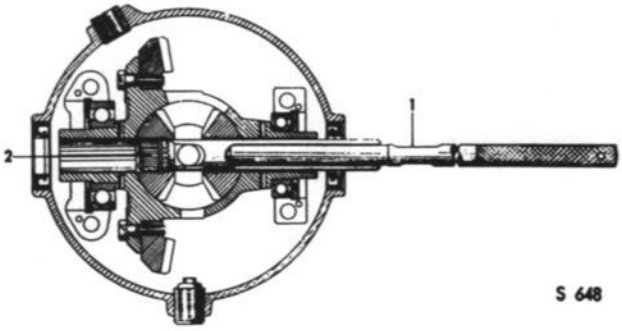

TAPPING-OUT BROKEN INNER DRIVER

1. Driving-out arbor
2. Shaft pin

OUTER UNIVERSAL JOINT

General

On the outer universal joints, the outer drive shaft is in the form of a dome with spherical grooves, in which 6 balls transmit the power from a hub. The middle drive shaft and the hub are splined, and a retaining spring is used to hold the shaft at the hub. When installing the shaft, the retaining spring is compressed with a special tool, and the shaft is then passed into the hub. A special tool is also used to drive the shaft out ot the hub in disassembling.

The only spare parts available are the outer drive shaft, complete with hub, ball holders and balls. These parts are matched and must not be mixed up.

Lubrication is necessary only after reconditioning, or if the universal joint has been removed for some other reason. Saab Special Grease shall be used.

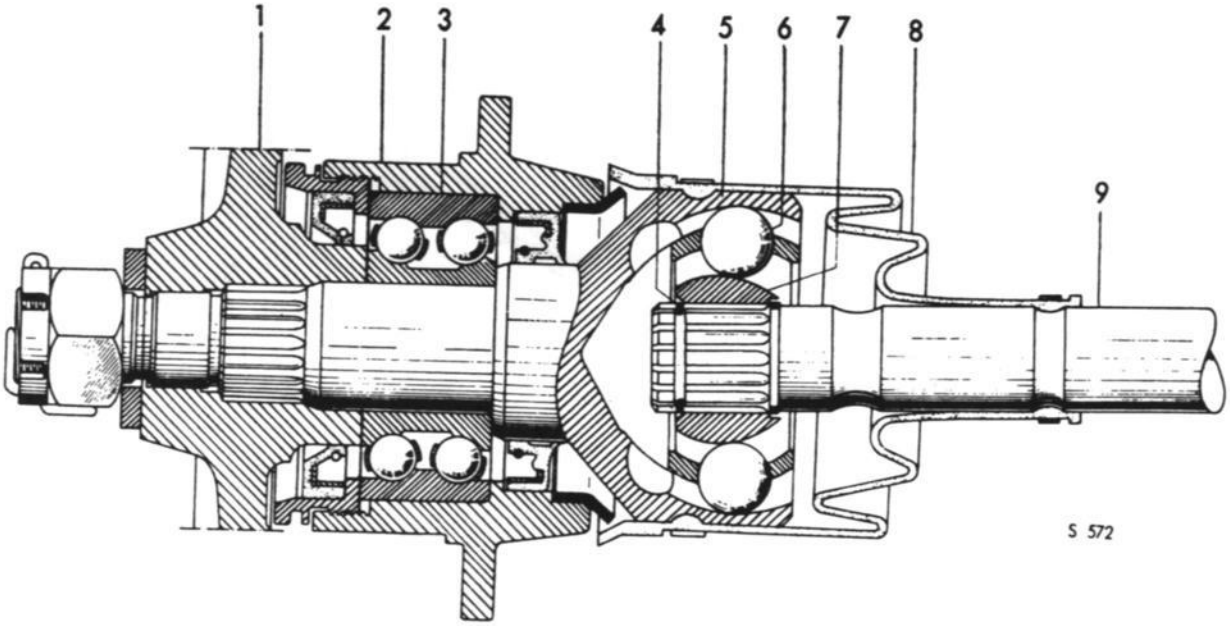

OUTER UNIVERSAL JOINT

1. Wheel hub
2. Steering knuckle housing
3. Ball bearing
4. Lock ring
5. Outer drive shaft
6. Balls
7. Hub
8. Rubber bellows
9. Inner drive shaft

Disassembly

1. Jack up the front part of the car and take off the wheel.
   Remove the brake housing and hang it up by the wheel house to prevent damage to the brake hose. Then remove the hub and the brake disc.
2. Remove the steering arm and upper ball joint from the steering knuckle.
3. Back off the clamping screw which holds the lower ball joint to the steering knuckle.
4. Remove the large clamp for the rubber boot on the inner universal joint and open up the joint. Fit cover 731762 into the rubber boot to prevent the needle bearings from dropping out and dirt from entering the joint. See "Inner universal joint". Fit protective cover 783846 onto the inner driver.
5. Pull the drive shaft out through the wheel house and remove the front-axle assembly. Wash this assembly thoroughly.
6. Remove the nut and shaft seal from the steering knuckle. Use the pegged key, No. 784020. First prise up the nut retainer with an arbor or other suitable tool.
7. Remove the outer drive shaft by applying pressure to its outer end. The outer drive shaft will be accompanied by the universal joint, rubber boot and middle drive shaft. See fig.
8. If necessary, drive the bearing out of the steering knuckle from the inside.
9. Remove the two sealing rings from their seats in the steering knuckle nut if they require changing.
10. Secure the middle drive shaft in a vise and strike the hub off the shaft with the aid of arbor No. 784202. See fig.

> NOTE
>
> The hub, ball holder and balls can be removed from the dome if the hub is turned 90° in a certain position. Disassembly, however, should be carried out only if absolutely essential.

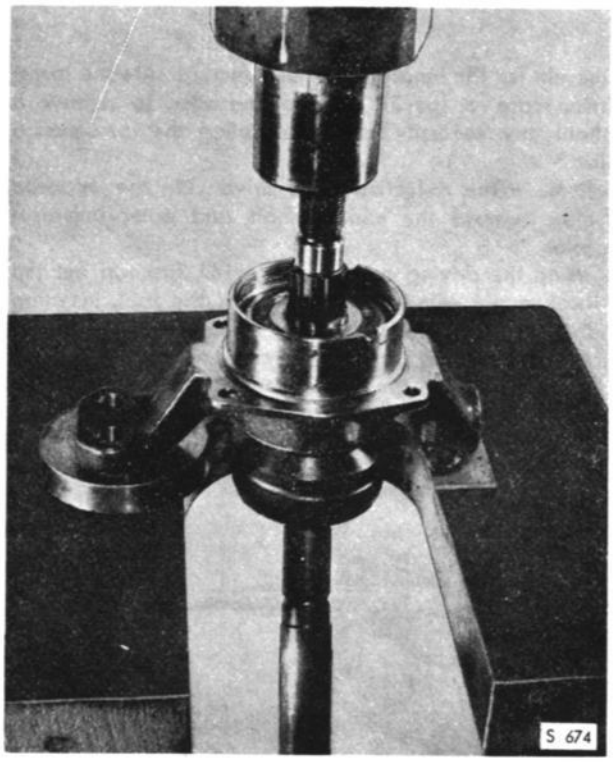

PRESSING OUT THE OUTER DRIVE SHAFT

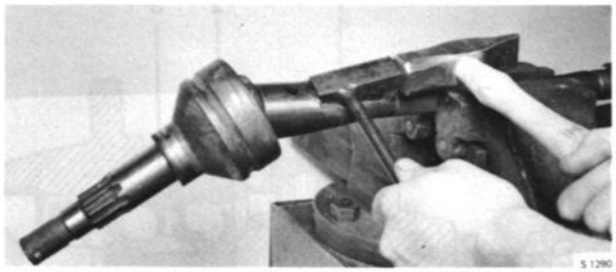

REMOVAL OF INNER DRIVE SHAFT FROM OUTER UNIVERSAL JOINT WITH TOOL 784202

Reassembly

Clean all the component parts thoroughly, and replace worn or damaged parts by new ones. Pay particular attention to shaft seals and rubber boots.

1. Fit a new sealing ring into the steering knuckle if the old seal has been removed.
2. Pack the bearing with SAAB Special Grease. Always use genuine bearings.
3. Drive the ball bearing into the steering knuckle, using tool No. 784075 and 784030, with the number stamped on the outer race facing outwards. See fig.
4. Screw on the nut and the shaft seal and secure the nut.
5. Fill the space between the lips of the sealing ring with chassis grease and drive the shaft in until it butts against the bearing.
6. Lubricate the universal joint with Saab Special Grease. The correct amount of grease will be obtained if the dome, with hub and balls inserted, is completely filled with grease. This operation must be carried out in conditions of scrupulous cleanliness in order to prevent foreign matter from entering the universal joints and bearings.
7. Ease the rubber boot and clamps onto the middle drive shaft. Also refit the rubber boot for the inner universal joint.

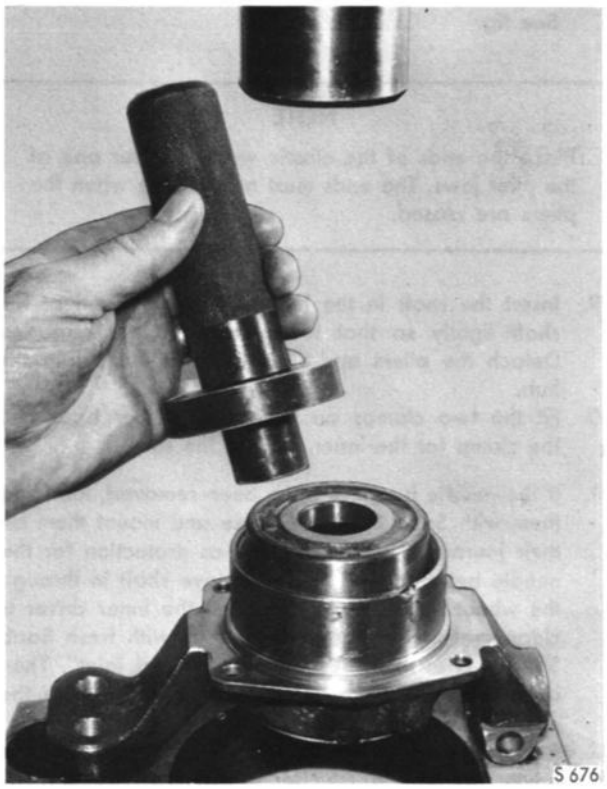

PRESSING IN THE BALL BEARING IN THE STEERING KNUCKLE, TOOLS 784030 AND 784075. THE MARK ON THE BALL BEARING FACING OUTWARDS

8. Fit a new elastic washer on the middle drive shaft and compress it with the aid of tool No. 784161. See fig.

> NOTE
>
> Place the ends of the elastic washer under one of the plier jaws. The ends must not be free when the pliers are closed.

9. Insert the shaft in the hub and tap the end of the shaft lightly so that the elastic retainer engages. Detach the pliers and slide the shaft fully into the hub.
10. Fit the two clamps on the outer rubber boot and the clamp for the inner boot at the shaft.
11. If the needle bearings have been removed, lubricate them with Saab Special Grease and mount them on their journals. Fit cover 731762 as protection for the needle bearings and pass the drive shaft in through the wheel house. Make sure that the inner driver is clean and that it has been packed with fresh Saab Special Grease — see "Inner universal joint". Then reassemble the inner universal joint and tighten the clamp round the rubber boot.
12. Refit the steering knuckle to the steering arm and lower ball joint. Remember to provide tabbed washers at the screws, and to secure these.
13. Refit the hub and the brake disc, followed by the brake housing and friction pads. Secure the screws with tabbed washers.
14. Refit the wheel and lower the car to the floor. Tighten the axle nut to a torque of 130 ft-lb (18 kpm), and secure.
15. Refit the hub cap.

> CAUTION
>
> The friction pads must be returned to their positions near the brake disc. To ensure correct positioning, pump repeatedly with the brake pedal. Negligence in this respect will result in brake failure.

PLACING THE LOCK RING IN TOOL 784161

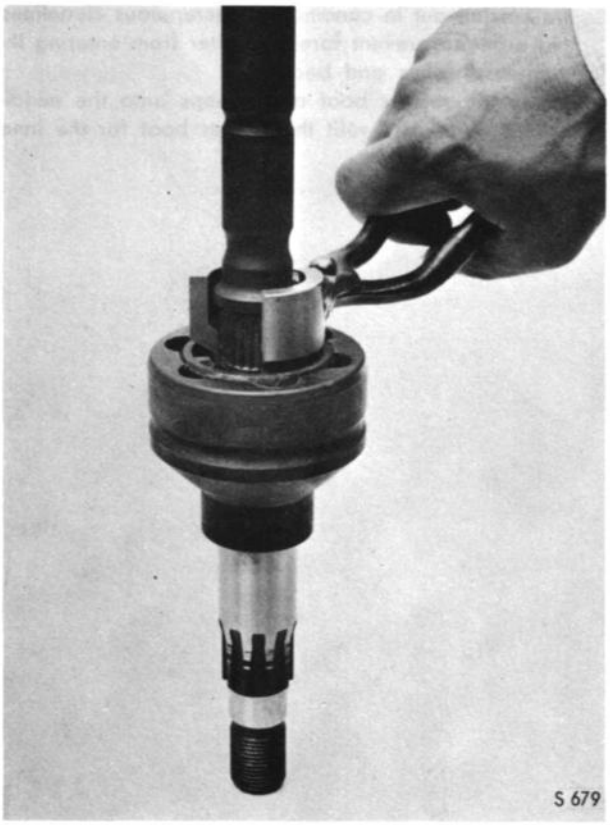

INSTALLATION OF INNER DRIVE SHAFT

CONTENTS

DESCRIPTION

General

The hydraulic footbrake acts on all four wheels. The brake system is of the two-circuit type, which means that the master cylinder controls the left front and right rear wheels simultaneously with, but independently of, the right front and left rear wheels. Consequently, if leakage occurs as a result of damage to the brake system, braking effect will be lost only on one diagonal pair of wheels, while remaining for the other pair. Leakage is revealed both by excessive pedal travel and by a tendency for the car to swerve towards the side at which brake pressure remains on the front wheel when the brakes are applied.

The Saab 95 and 96 have disc brakes in front and drum brakes at rear.

The mechanical handbrake acts on the rear wheels. The brake lever is located between the two front seats and the braking effect is transmitted to the rear wheels by two sealed Bowden cables.

The footbrake system as from model 1969 is hydraulic with vacuum servo. The vacuum servo cylinder is connected to the suction line of the engine. When the brake pedal is depressed, the vacuum servo cylinder is affected, which in turn strengthens the pedal power and transmits the movement to the master cylinder.

The car has a brake warning system which consists of a mechanical contact above the brake pedal and a warning light, located in the speedometer. The light begins to glow when the brake pedal travel becomes too long, e.g. at a leak in the brake system.

Two-circuit brake system, function

When the brake pedal is depressed, the master cylinder pistons apply a force to the brake fluid, which is transmitted through brake pipes and hoses to the pistons of the brake cylinders, causing the brake pads to contact the brake disc and the brake linings the drums. The master cylinder has two pistons which work simultaneously, but independently, so that one acts on the left front and right rear wheels while the other acts on the right front and left rear wheels. Consequently, if leakage occurs in one circuit, the piston in the damaged circuit moves without affecting the brake pads.

Every application of the brakes thus pumps a certain amount of brake fluid out of the system, but as the upper part of the brake cylinder forms two chambers separated by a partition, the system can only be emptied as far as the partition. The brake fluid remaining for the undamaged circuit is sufficient to allow the car to be driven safely to a garage to have the damage repaired. Since the two-circuit brakes operate on the diagonal wheels, always approx. half the braking effect remains at leakage in one circuit. Furthermore, this affords greater safety when steering the car, as one front wheel and one rear wheel roll freely at the same time and are not locked.

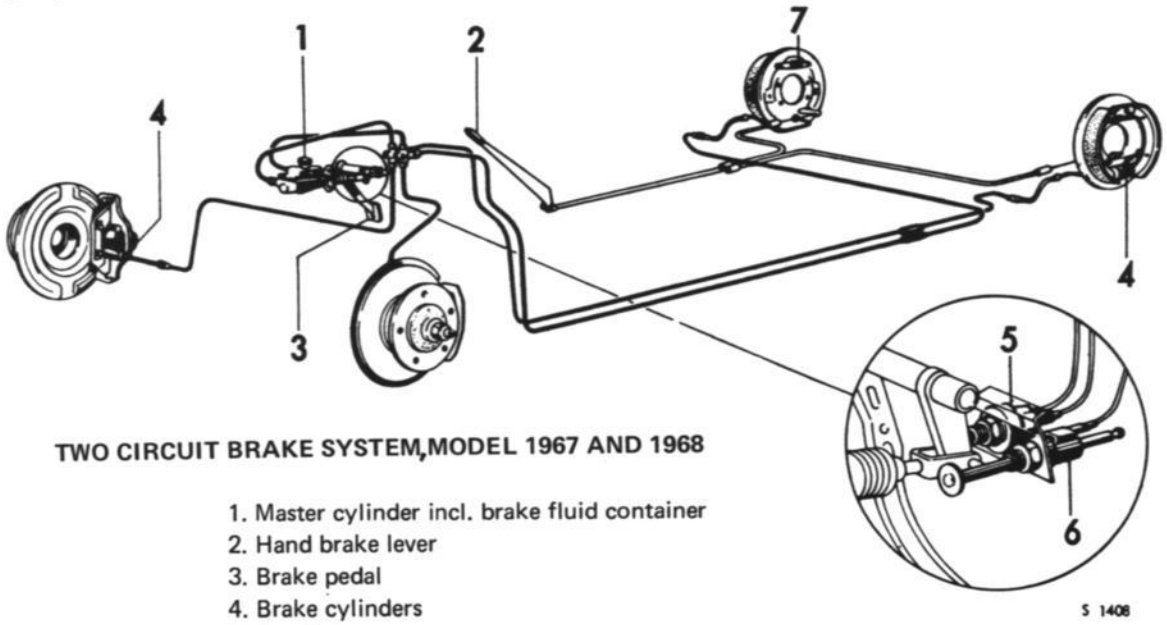

TWO CIRCUIT BRAKE SYSTEM, MODEL 1967 AND 1968

1. Master cylinder incl. brake fluid container
2. Hand brake lever
3. Brake pedal
4. Brake cylinders
5. Stoplight contact
6. Brake warning contact
7. Adjustment screw, rear wheel brake

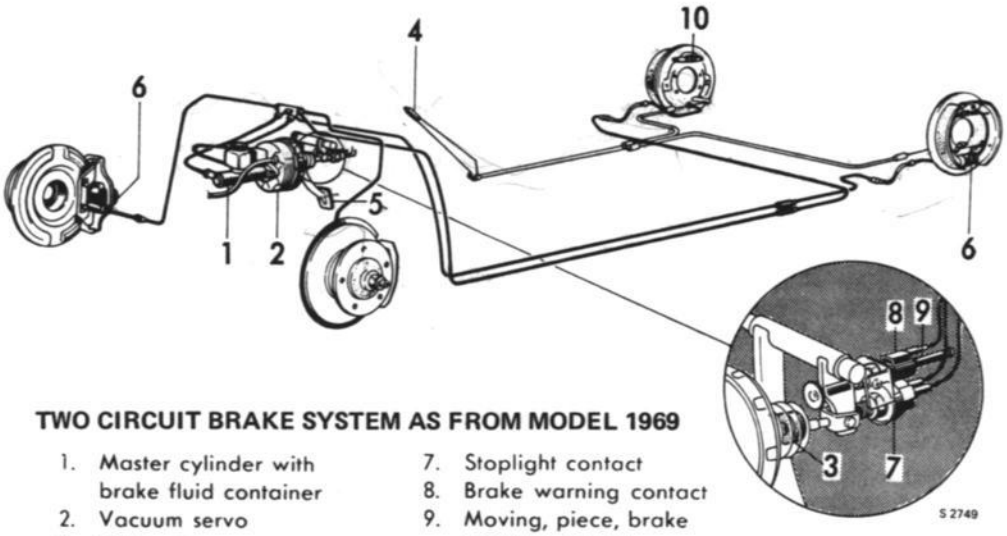

TWO CIRCUIT BRAKE SYSTEM AS FROM MODEL 1969

1. Master cylinder with brake fluid container
2. Vacuum servo
3. Filter, vacuum servo
4. Handbrake lever
5. Brake pedal
6. Brake cylinders
7. Stoplight contact
8. Brake warning contact
9. Moving, piece, brake warning contact
10. Adjusting screw, rear brake

Master cylinder up to and incl. model 1970

The tandem master cylinder comprises a body housing a primary piston and a secondary piston, which are actuated by the push-rod from the brake pedal. The distance between the pistons is determined by a spiral spring and a wire clamp. The secondary piston has a primary cup and a secondary cup at front and rear respectively. Fitted behind the primary cup is a dished piston washer, which prevents the cup from being extruded into the feed holes in the piston flange. The primary cup of the primary piston also has a dished piston washer and a secondary, rear cup.

The spiral springs return the pistons to the initial position. In their initial position, the pistons are retained by the spring pressure and as a consequence the channels open between the fluid container and the master cylinder.

When the brake pedal is depressed, the push-rod actuates the primary piston, making the inlet channel between fluid container and cylinder close, and the pressure in front of the primary piston rise which in turn affects the secondary piston making it move and in this way the same overpressure is obtained in front of both pistons. Now brake fluid is forced out through the brake lines to the wheel cylinders and puts the brakes into action.

If a leakage occurs in the brake circuit served by the primary piston, the spring is compressed until the primary piston contacts the secondary piston. Then the latter can work normally.

At a leakage in the secondary piston circuit, the secondary piston is pressed forward by the primary piston and the spring, until the secondary piston strikes the bottom of the cylinder. Then, brake fluid can be pressed out into the undamaged circuit.

Master cylinder as from model 1971

As from model 1971 the pistons are equipped with three seals on each, and the distance between the pistons is determined by a spiral spring and a screw.

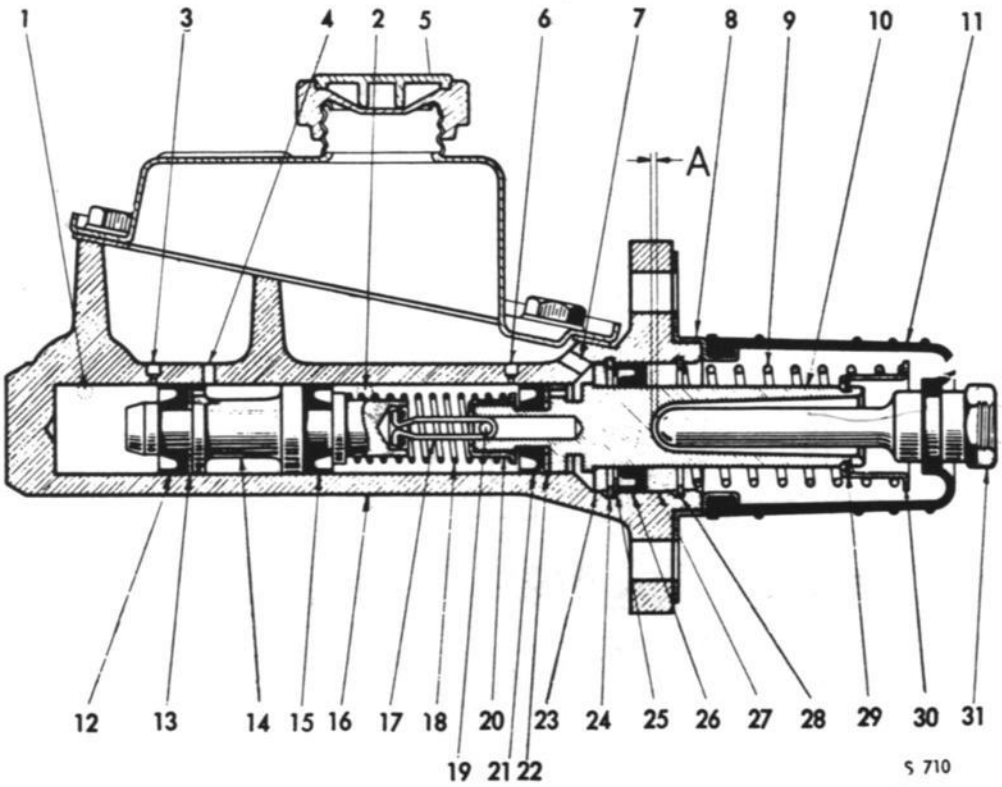

MASTER CYLINDER, SECTIONED, UP TO AND INCL. MODEL 1968

A = 0,6—1,2 mm

1. Outlet to one circuit
2. Outlet to other circuit
3. Bypass port
4. Feed hole
5. Brake-fluid reservoir
6. Bypass port
7. Feed hole
8. Retaining plate
9. Spring
10. Primary piston
11. Rubber boot
12. Primary cup
13. Piston washer
14. Secondary piston
15. Secondary cup
16. Body
17. Clip
18. Spring
19. Retaining pin
20. Spring holder
21. Primary cup
22. Piston washer
23. Piston stop ring
24. Circlip
25. Washer
26. Secondary cup
27. Guide bearing
28. Circlip
29. "Spirolox" circlip
30. Spring retainer
31. Push-rod

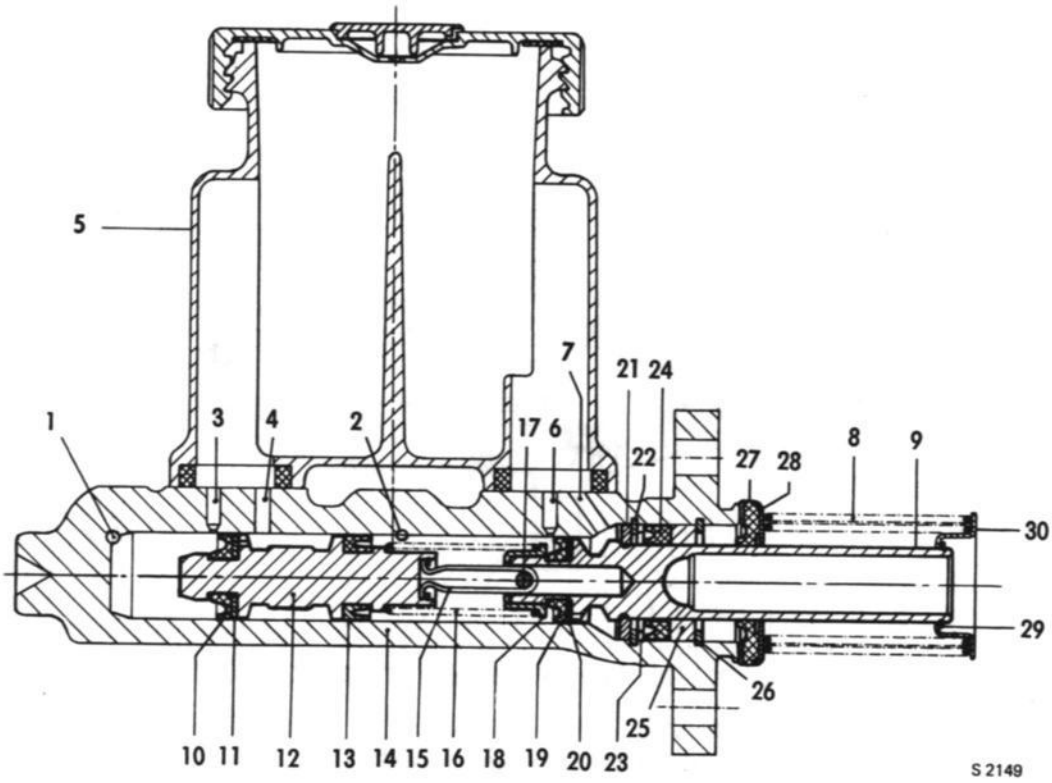

MASTER CYLINDER, SECTIONED, MODEL 1969–1970

1. Outlet to one circuit
2. Outlet to the other circuit
3. Bypass port
4. Feed hole
5. Brake-fluid reservoir
6. Bypass port
7. Feed hole
8. Spring
9. Primary piston
10. Primary cup
11. Piston washer
12. Secondary piston
13. Secondary cup
14. Body
15. Wire clip
16. Spring
17. Retaining pin
18. Spring holder
19. Primary cup
20. Piston washer
21. Piston stop ring
22. Circlip
23. Washer
24. Secondary cup
25. Guide bearing
26. Circlip
27. Gasket
28. Washer
29. "Spirolox" circlip
30. Spring retainer

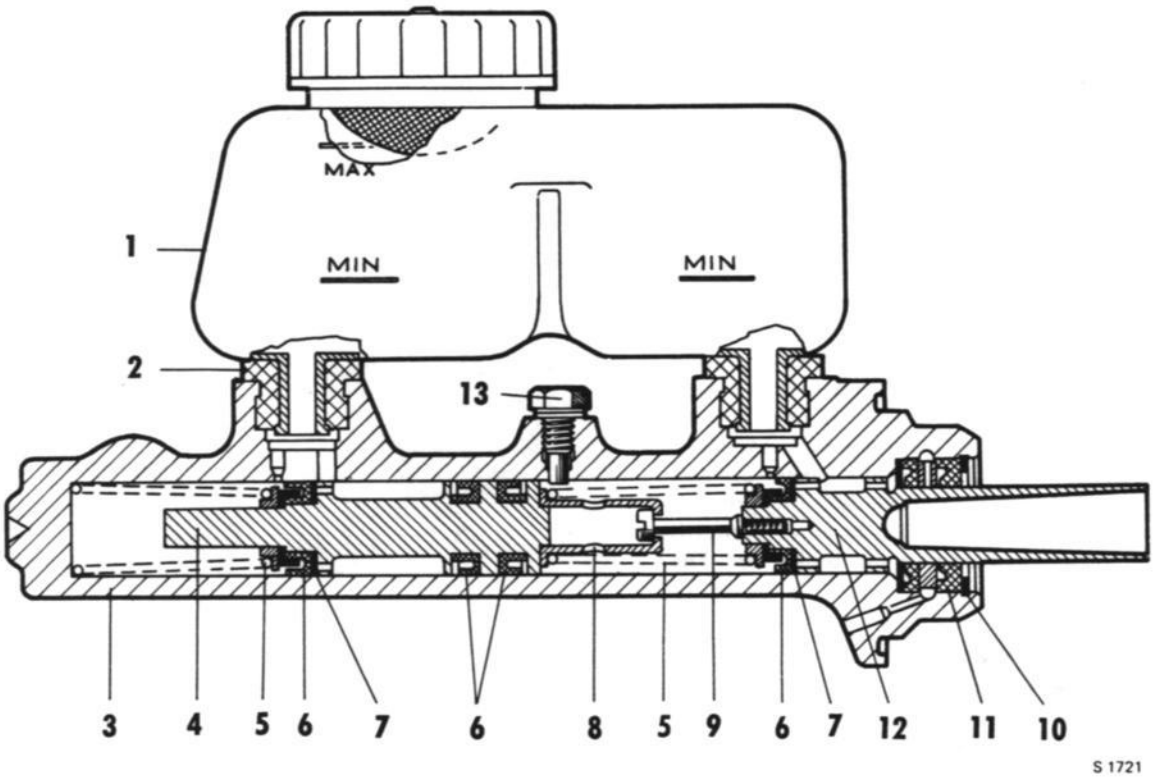

MASTER CYLINDER, AS FROM MODEL 1971

1. Container
2. Rubber seal
3. Housing
4. Secondary piston
5. Spring
6. Piston seals
7. Washer
8. Sleeve
9. Screw
10. Lock ring
11. Seal ring
12. Primary piston
13. Screw

DISC BRAKE

The front wheels are equipped with disc brakes with only one cylinder.

The principal parts of this brake are the support bracket, brake body assembly, cylinder body and friction pad assemblies.

The support bracket, which is bolted to the steering knuckle housing, keeps the brake in place and transmits the braking forces to the knuckle housing.

The brake body assembly is fitted to the support bracket by means of a hinge pin and a friction unit. It is thus movable in relation to the support bracket, the torsional centre being provided by the hinge pin.

The brake cylinder has an outer wiper seal, which prevents the entry of dust, and an inner fluid seal.

The friction pad assemblies consist of frictional material which is glued to a pressure plate. The friction pads are wedge-shaped in order to compensate for the irregular wear which occurs on account of the movement taking place around the hinge pin. The outer friction pad is mounted in the brake body assembly whereas the inner pad rests against the brake piston and is held in position by the support bracket and the brake body assembly. The hydraulic pressure is built up in the master cylinder and is transmitted to the brake cylinder. The pressure actuates the brake piston, causing this to move outwards and press the friction pad against the brake disc. The movable brake unit is then influenced, so that the outer friction pad is also pressed against the brake disc.

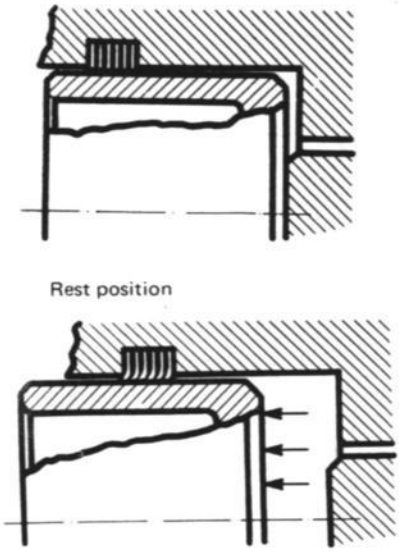

S 1723

THE BRAKE PISTON IS RETURNED TO REST BY THE ACTION OF THE PISTON SEAL

When the piston is being pressed outwards in the cylinder, a certain resilience occurs in the piston seal which surrounds the piston. This springiness is sufficient to pull the piston back when the hydraulic pressure decreases, thus providing a clearance between the friction pad and the disc. The outer friction pad is moved back on account of the movement of the brake body assembly in relation to the support bracket. Wear on the brake linings is compensated for automatically, as the brake piston moves outwards by means of the seal.

The effect of this combination of the simple brake cylinder and the movable brake unit is that both friction pads are pressed together with a torsional movement which tends to give irregular wear on the friction pads. This wear is made up for by the fact that the pads are wedge-shaped. As the friction pads get worn, the brake body assembly turns around the hinge pin, thus causing the angle of wear to be continuously changed. When the linings have become so worn as to necessitate changing the friction pads, the angle has become so small that the lining is practically parallel with the pressure plate, see fig.

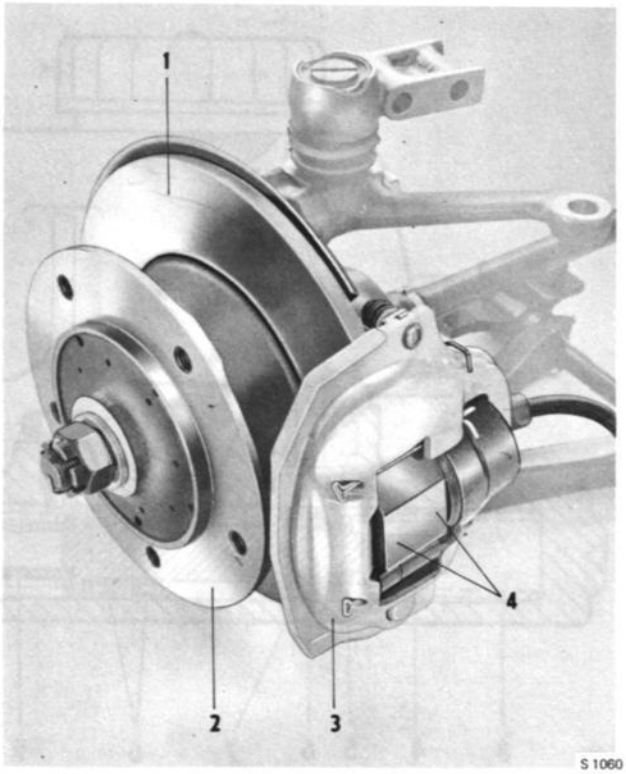

FRONT AXLE ASSEMBLY WITH DISC BRAKE FROM MODEL 1967

1. Brake disc
2. Wheel hub
3. Brake housing
4. Brake pads

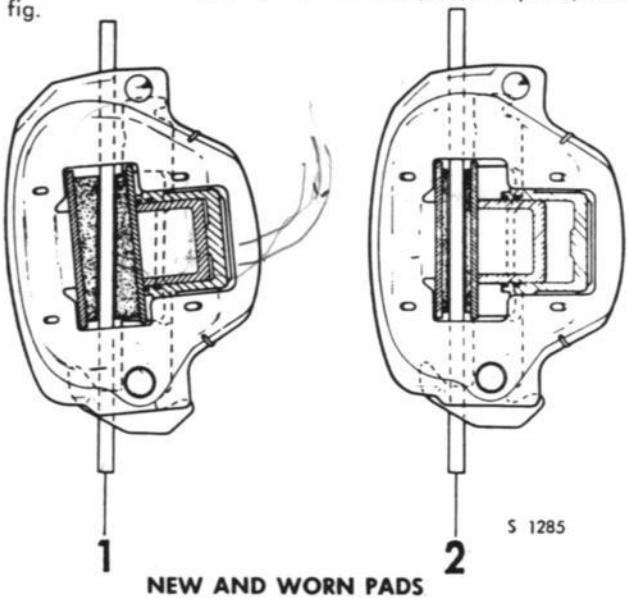

NEW AND WORN PADS

1. New pads
2. Worn pads

Rear wheel brakes and handbrake

The rear wheel brakes and the handbrake are identical for SAAB 95 and 96 and have a wheel cylinder mounted in the backplate. The cylinder is fitted with two pistons, each of which acts on one brake shoe – see fig. The brake shoes are manually adjustable.

The handbrake lever is located between the two front seats and the braking movement is transmitted by sealed Bowden cables to levers in the rear wheel cylinders.

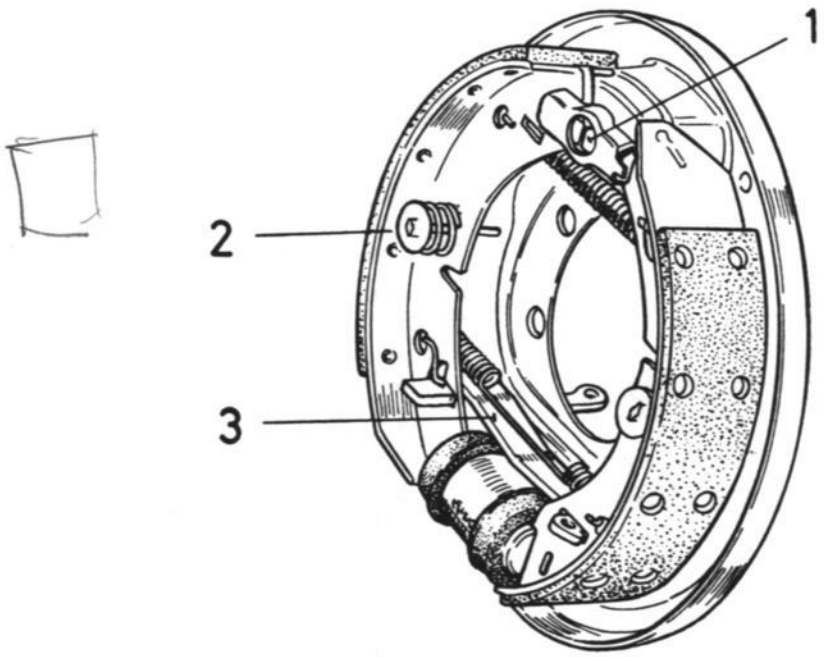

S 712

REAR-WHEEL BRAKES

1. Adjustment
2. Spring
3. Handbrake link

DESCRIPTION

Vacuum servo

The power brake unit consists of a vacuum cylinder which is actuated by the brake pedal. The cylinder is connected to the engine inlet manifold by means of a hose. The function of the system can be seen from the description below.

NOTE!
The vacuum servo shall not be disassembled

Initial position

When "off", the return spring holds the valve piston and the push-rod in the righthand end position in the guide housing. In this position, the atmospheric air channel is kept closed and the vacuum channel open.
The vacuum is equal on both sides of the diaphragm.

Brake position

When pressing the brake pedal, the valve piston is moved to the left, the vacuum channel is closed and air of atmospheric pressure flowes in on the right hand side of the membrane.
As vacuum prevails on the L.H. side of the diaphragm and atmospheric pressure on the R.H. side an increased force is obtained on the cylinder. The brake action can be increased further by larger pressure on the pedal. Once the pedal pressure ceases, the return spring forces the valve piston back. The vacuum channel opens, and the atmospheric air channel closes. The vacuum servo returns to its "off" position.
Should a fault occur in the power brake unit, the brake system of the car will function without servo effect. The servo cylinder will in that case serve only as a lengthened push-rod.
In the latter case is, of course, a larger pedal pressure required.

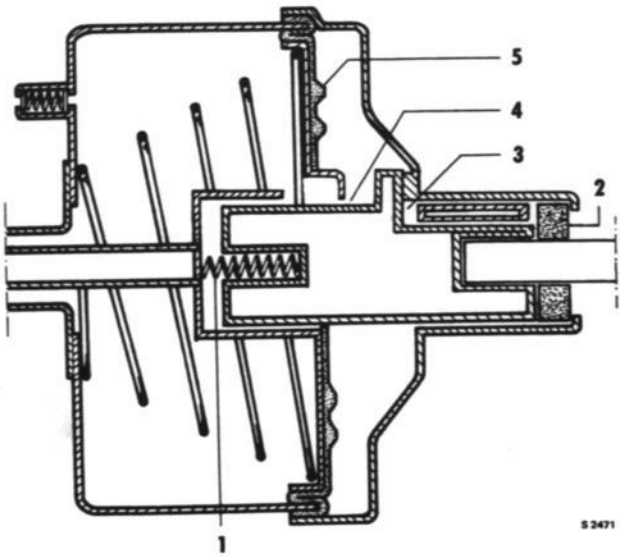

VACUUM SERVO, INITIAL POSITION

1. Return spring
2. Air filter
3. Atmospheric air channel
4. Vacuum channel
5. Diaphragm

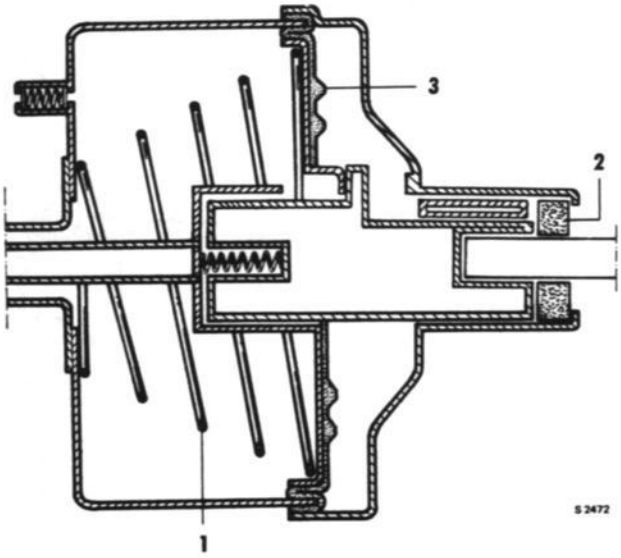

VACUUM SERVO, BRAKE POSITION

1. Diaphragm spring
2. Air filter
3. Diaphragm

Removal of brake drum for inspection of brake lining

1. Remove the cotter pin and the shaft nut.
2. Jack up the car.
3. Remove the wheel.
4. Release the handbrake and adjust the rear brake shoes with the adjusting screw.
5. Remove the brake drum, using puller No. 784002.
6. Examine the linings on all shoes. If they are worn to a thickness of 0.1 in. (2.5 mm), or unevenly worn, or covered with grease, new linings must be fitted. On the rear brakes the front linings last longer than the rear linings. It may then be sufficient to change the two rear linings only.

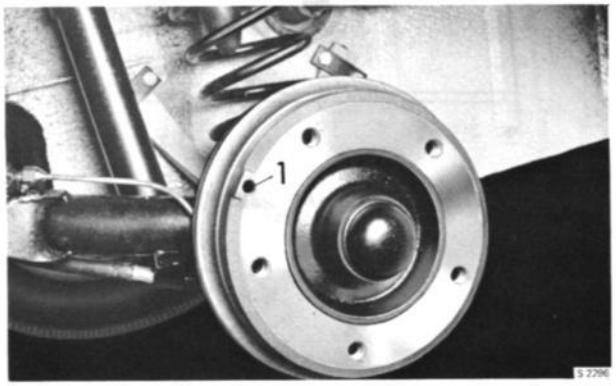

INSPECTION HOLE IN BRAKE DRUM

1. Inspection hole

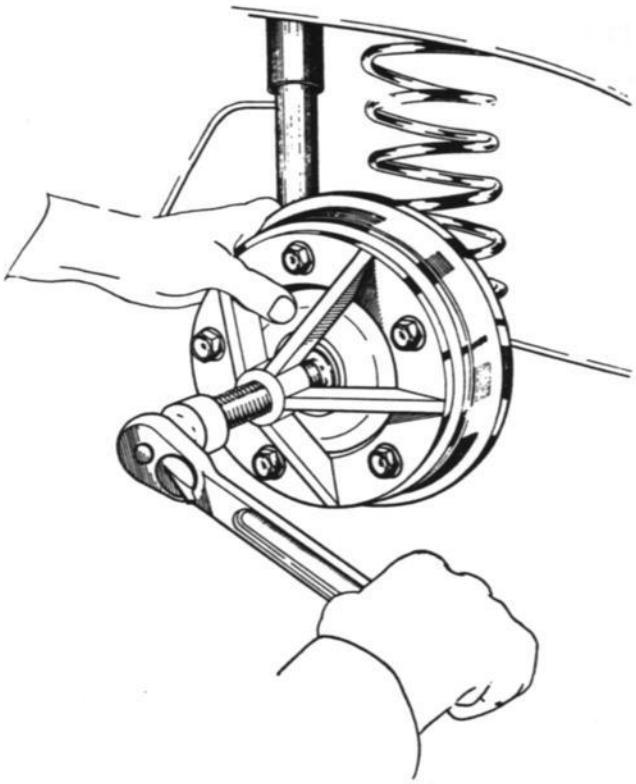

WHEEL PULLER 784002

NOTE
Never fit new brake linings on one side only.

7. An exchange system is operative for complete brake shoes with fitted automatic adjustment device. Replacement of linings thus calls for exchange of the entire shoe.
   If linings only are replaced, they must be ground in a special machine to a radius of about 0.010–0.012 in. (0.25–0.30 mm) less than that of the drum in order to ensure perfect contact. The ends of the linings must not be chamfered; the edge should be left as sharp as possible.

REAR BRAKE SHOES

Disassembly

1. Use a piece of wire or a clamp to keep the brake pistons in the cylinder while carrying out this operation.
2. Remove the springs which hold the brake shoes against the backplate.
3. Lift the brake shoes off from the wheel cylinder and handbrake levers, first at the top and then at the bottom end.

Reassembly

1. Hook on the springs between the shoes.
2. Locate the front shoe with the handbrake lever in the oblong hole.
3. Lift the rear shoe with the handbrake lever into the large hole. Make sure that the spring presses against the lever as shown in the fig.
4. Remove the wire or clamp used to keep the brake pistons in position.
5. Adjust the shoes to a position concentric with the backplate. Refit the springs holding the shoes against the backplate.
6. Refit the wheel hub and the wheel.
7. Adjust the brake shoes.

> WARNING
>
> Do not allow oil or grease to contaminate brake linings or drums.

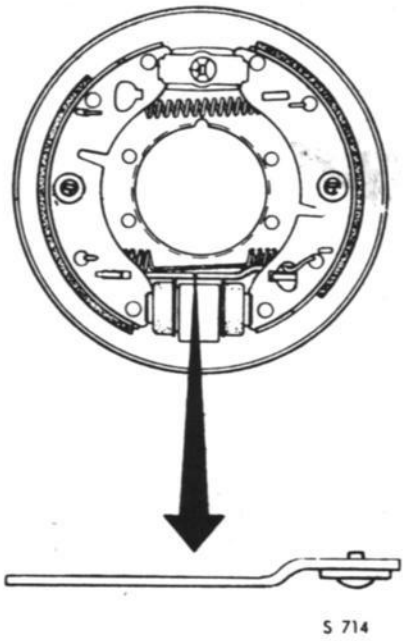

S 714

FITTING THE HANDBRAKE LEVER

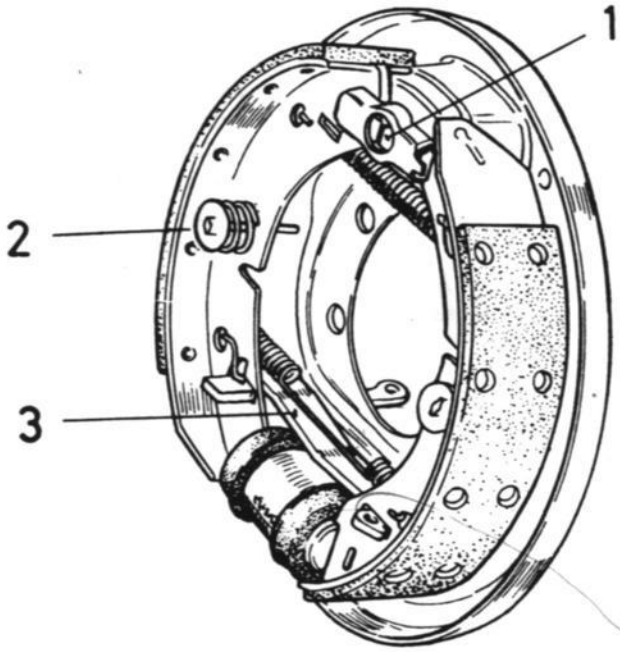

S 712

REAR-WHEEL BRAKES

1. Adjustment
2. Spring
3. Handbrake link

ADJUSTMENT OF BRAKE SHOES

General

Brake-shoe wear is revealed by excessive travel of the brake pedal or handbrake lever before the brakes work. **The distance between the pedal and the lower part of the dash panel must not be less than the values mentioned in the pictures, with a pedal pressure of approx. 55 lb (25 kp) and the engine ilding.**

The front wheels have self-adjusting brakes. Consequently, it will only be necessary to adjust the brake shoes on the rear wheel brakes.

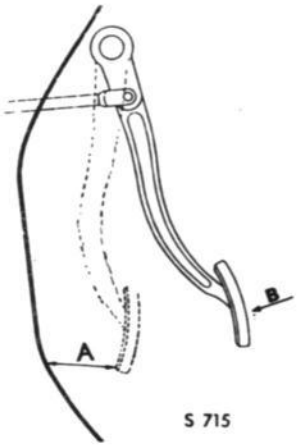

S 715

THE MINIMUM DISTANCE PERMISSIBLE BETWEEN DEPRESSED PEDAL AND TOE-BOARD UP TO AND INCL. MODEL 1968

A = 2.6 in. (approx. 65 mm)
B = approx. 55 lb. (25 kp)

Adjustment of rear brake shoes

1. Jack up the car so that the rear wheels are clear of the ground. Be sure to locate the jack in the correct position. It is possible to adjust the brake without removing the wheels.
2. Release the handbrake and check that the brake levers return all the way. If the cable runs sluggishly in its sheathing, the lever must be pulled off by hand.
3. Depress the brake pedal hard several times in order to center the brake shoes.
4. **The adjusting screw for the rear brakes consists of a square peg located on the rear of the backplate. See fig. Turn with a special spanner until the wheel is locked. Then back off one or more steps until the rear wheel again rotates freely.**

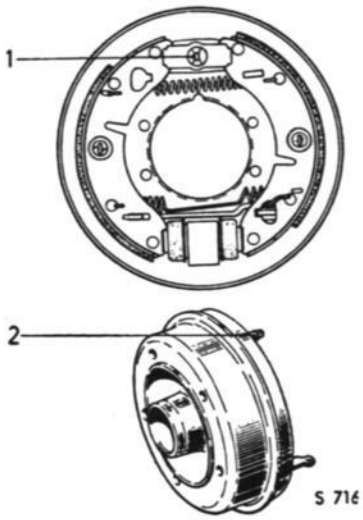

S 716

FOOTBRAKE ADJUSTING SCREW, REAR WHEELS

1. Adjustment device
2. Adjustment point

5. After adjusting, check that the free movement of the pedal is. 0.12—0.24 in. (3—6 mm). See Section 524. If the clearance is less than this measure, the brake shoes don't return when the brake pedal is released.
6. If the adjusting screw cannot be tightened up enough to lock the wheel, the brake linings are worn and must be renewed. Always change brake linings simultaneously on both wheels and never on one wheel only. The reason for this is to ensure that the braking effect will be even. When changing brake linings, always use genuine SAAB replacements or linings recommended by SAAB.

After adjusting the brakes, always make sure that the rear wheels revolve easily — this is done by depressing the brake pedal, releasing it and then rotating the wheels.

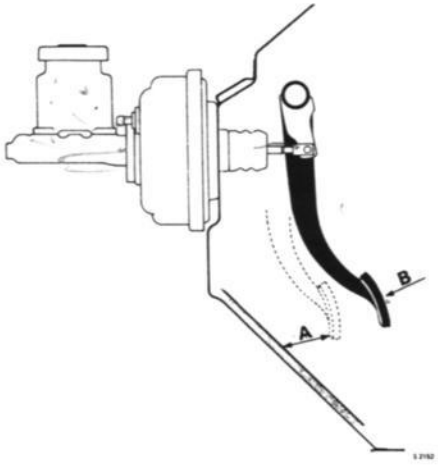

THE MINIMUM DISTANCE PERMISSIBLE BETWEEN DEPRESSED PEDAL AND TOE-BOARD AS FROM MODEL 1969

A = 2.3 in. (approx. 58 mm)
B = approx. 55 lb. (25 kp)

REPLACEMENT OF BRAKE LININGS

At intervals not exceeding 6000 miles (10.000 km) the wheels shall be removed and the thickness of the brake linings checked. For the brake drums this is made through the inspection holes. The brake linings should be exchanged at a thickness of 0.1 in. (2,5 mm), the friction pads at 0.06 in. (1,5 mm) thickness of the very lining.

An exchange system is operative for complete brake **shoes. Replacement of linings thus calls for exchange of the entire shoe.**

If linings only are to be changed, they must be ground **in a special machine to a radius of 0.010—0.012 in. (0,25—0,30 mm) less than that of the brake drum in order to ensure perfect contact. The ends of the linings must not be chamfered; the edge should be as sharp as possible.**

The procedure is as follows:

1. Remove the old brake linings.
2. Wash the brake shoes in gasoline or kerosene and blow clean with compressed air.
3. Place the new linings on the shoes and fix them with two rivets in the center.
4. Fix the other rivets in turn, proceeding from the center and out towards the ends. Stretch the lining well to secure good contact with the shoe. Any clearance left between the shoe and its lining may jeopardize the function of the brakes and cause unwanted noise.
5. **Grind the lining to a radius of about 0.010—0.012 in. (0.25—0.30 mm) less than that of the drum.**

NOTE

To secure perfect contact between the lining and the drum, and speedy running-in, the linings should **be ground after riveting to a radius of 0.010—0.012 in. (0,25—0,30 mm) less than that of the drum. This is particularly important when the brake drum has been machined. Special equipment is required for this grinding operation.**

NOTE

The ends of the linings must not be chamfered, but should have as sharp an edge as possible.

NOTE

To ensure optimal safety, use only genuine SAAB linings or exchange shoes.

WARNING

Do not allow oil or grease to come in contact with brake linings or drums.

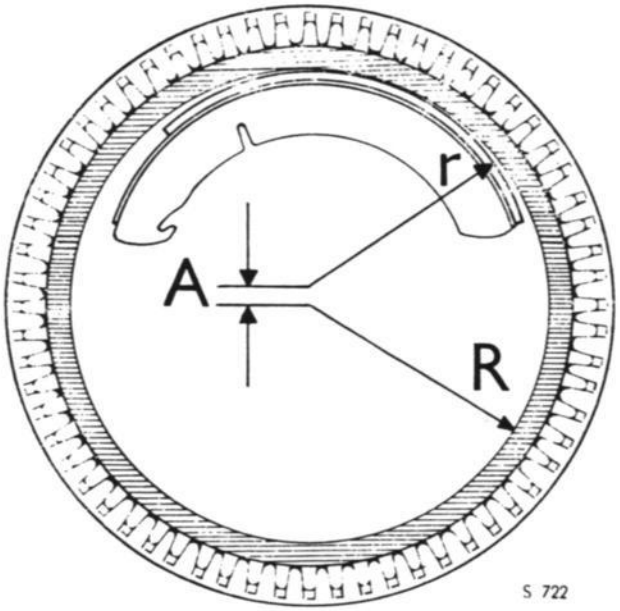

CENTERLESS GRINDING OF BRAKE LININGS

R = Radius of brake drum

r = **Radius of brake lining. Thus, r to be 0.010—0.012 in. (0,25—0,30 mm) less than R**

A = **measurement 0.010—0.012 in. (0,25—0,30 mm)**

BRAKE DRUMS

Removal and installation of brake drum

1. Remove the cotter pin and the shaft nut.
2. Jack up the car.
3. Remove the wheel.
4 Release the handbrake and adjust the rear brake shoes with the adjusting screw.
5. Remove the brake drum, using puller No. 784002.
6. After refitting the brake drum, tighten the shaft nut with a torque wrench set at 65 ft-lb (9 kgm).

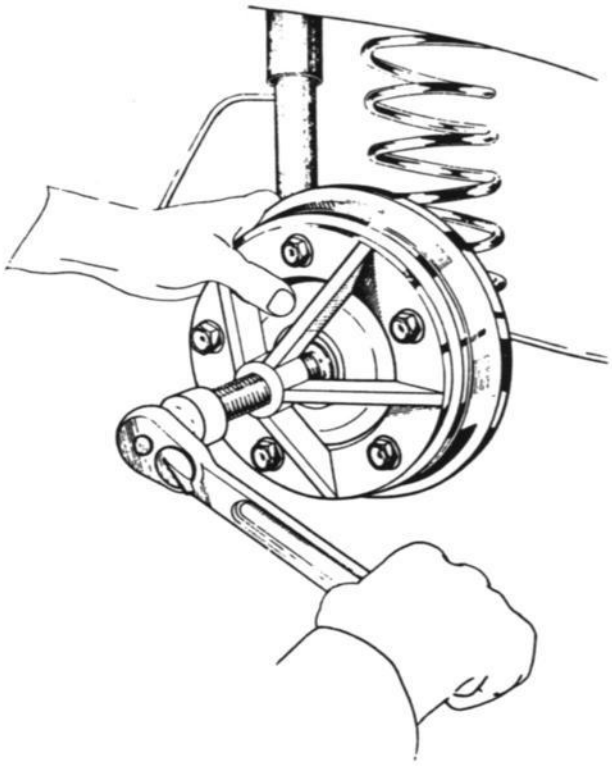

WHEEL PULLER 784002

Machining brake drums

If the brake drums are moderately scored, and more or less equally on both left and right sides, this will not influence the braking effect or the life of the brakes. If, on the other hand, only one drum is scored or both drums severely scored, they should be renewed or perhaps machined. Renewal or machining is also necessary if the brake drum is out-of-round, which is betrayed by jerky pedal action when the brakes are applied. The brake drum may be machined to a maximum diameter of 8.059 in. (204.7 mm).

Replacement of brake disc

When the brake disc shows signs of heavy wear after considerable mileage, it must be replaced by a new one. Moderate scoring, on the other hand, does not necessitate replacement.

To change the brake disc, proceed as follows:

1. Remove the hub cap and slacken the shaft nut.
2. Jack up the front of the car, take off the wheel and remove the shaft nut.
3. **Remove the two bolts holding the brake housing to the steering knuckle housing. These bolts are accessible from the inside of the brake disc. Lift the brake housing clear of the brake disc.**

> NOTE
> **Do not disconnect the brake hose, instead place the brake housing in such a way that the hose is not exposed to tension.**

4. Pull off the wheel hub with the brake disc attached, using wheel puller 784002.
5. Detach the brake disc from the wheel hub.

Reassemble in reverse order. When refitting the brake housing bolts in the steering knuckle housing, always use a new locking plate.

> NOTE
> After the reassembly, remember to pump repeatedly with the brake pedal so that the brake pistons will move out towards the disc.

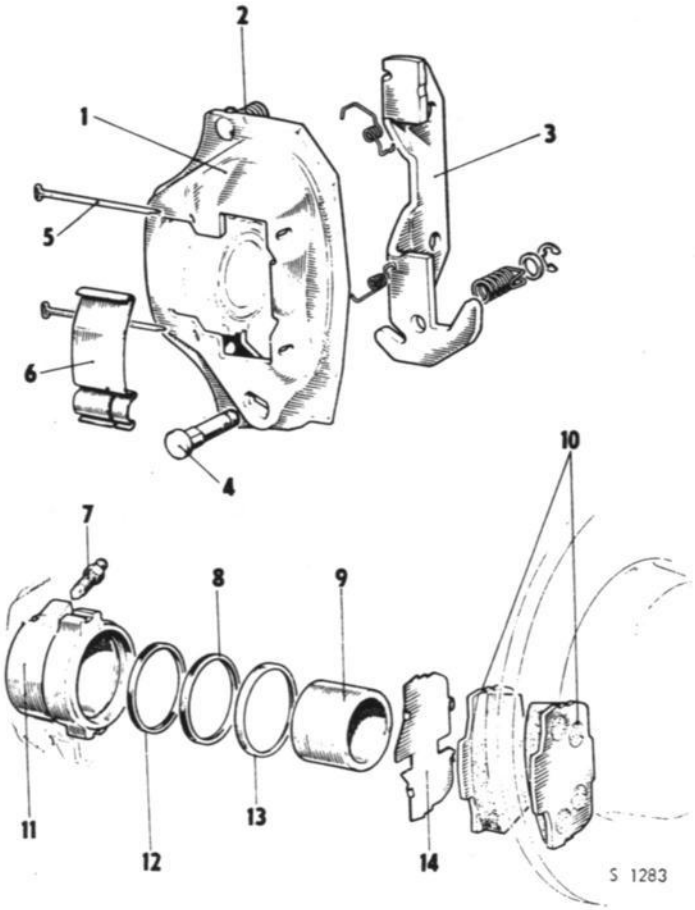

DISC BRAKE COMPONENTS

1. Brake body assembly
2. Spring loaded steady pin
3. Support bracket
4. Hinge pin
5. Split pins
6. Spring clip
7. Bleed screw
8. Wiper seal
9. Piston
10. Friction pad assemblies
11. Cylinder body
12. Fluid seal
13. Retainer
14. Shim

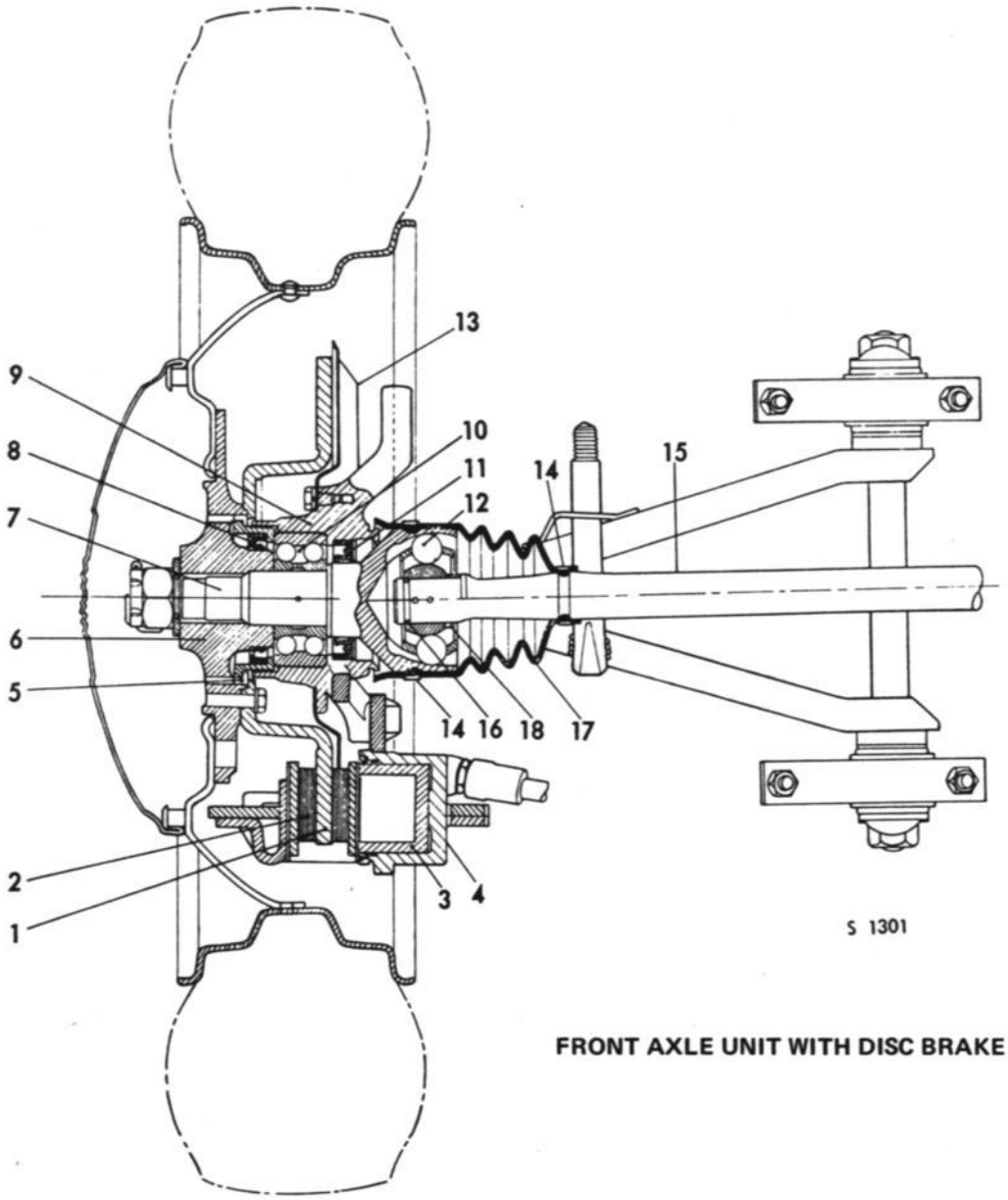

1. Brake disc
2. Brake pad
3. Brake piston
4. Brake housing
5. Nut
6. Wheel hub
7. Outer drive shaft
8. Shaft seal
9. Steering knuckle housing
10. Ball bearing
11. Shaft seal
12. Ball
13. Backing plate
14. Clamp
15. Inner drive shaft
16. Circlip
17. Bellow
18. Spacer ring (On certain cars only)

FRONT AXLE UNIT WITH DISC BRAKE

FRICTION PADS, DISC BRAKE

General

As the disc brakes are selfadjusting, it is not possible to decide by the length of the pedal stroke wether the brake linings are worn. At intervals not exceeding 6000 miles (10.000 km) the wheels shall be removed and the thickness of the brake linings checked. The friction pads must be removed when the thickness of the lining is less than 0.06 in. (1,5 mm)

Replacement of friction pads

1. Jack up the car and remove the wheel.
2. Remove the cotter pins, and the spring holding the friction pads. Remove the friction pads.
3. Clean thoroughly the uncovered part of the piston, and make sure that there is no rust or dirt on the friction pads' surfaces which contact the bracket and the yoke.

> NOTE
> When cleaning, use only brake fluid or methylated spirit.

4. Drive the piston back into the brake housing with the aid of screw vise No. 786043.

> NOTE
> When the brake piston is forced back into the cylinder, the brake-fluid level in the reservoir will rise appreciably, and it may then be necessary to drain off superfluous fluid.

5. Clean the brake disc thoroughly with trichlorethylene.
6. Turn the movable brake part towards the wheel, and fit the outer friction pad. Make sure that it moves freely in its position in the yoke. Possibly, protruding parts will have to be trimmed with a file.

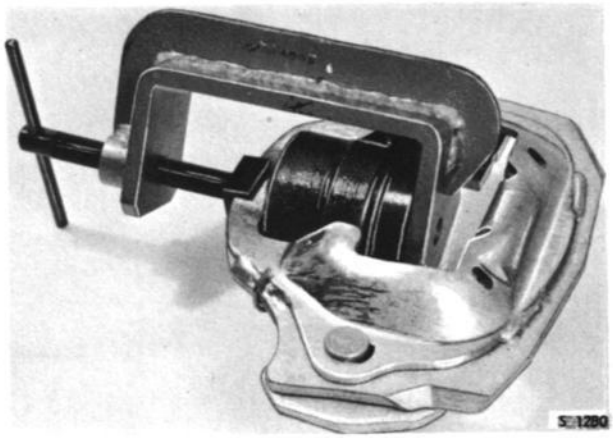

PRESSING IN THE BRAKE PISTON; TOOL 786043

> IMPORTANT
> If used friction pads are refitted, they must be placed in their original locations.

7. Turn the movable brake part backwards as far as possible.
8. Fit damping shims to the back of the friction pads, and make sure that the shim does not exceed the contours of the pressure plate.
9. Be sure that the damping shim is fitted with the two recesses directed downwards, in such a way that they are centred on the ends of the piston recess. Fit the inner friction pad. Also make sure that the recess **in the piston is directed downwards. The brake piston of the latest design has a face-ground contact surface facing the friction pad. In this connection the damping shim has been altered in such a way that the piston has the corresponding fit-up facing the friction pad.**
10. Fit the spring. The recess in the spring shall lie as near as possible to the outer friction pad. Fit new cotter pins, and lock them.
    Fit the upper cotter pin first. When fitting the lower cotter pin, press the spring upwards with the aid of a screwdriver. See fig.

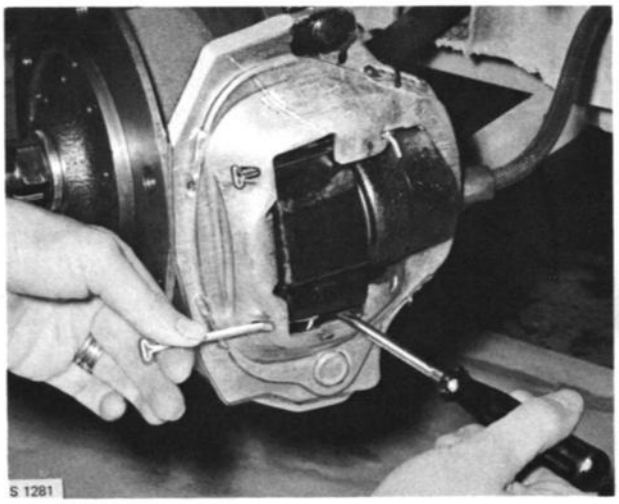

INSTALLATION OF BRAKE PADS

NOTE
Fit a new spring, if the old one is worn out.

11. Pump repeatedly with the brake pedal in order for the friction pads to be adjusted in towards the brake disc.

WARNING
Do not forget topump repeatedly with the brake pedal, otherwise the pedal will go all the way down when the brakes are applied.

12. Top up with brake fluid in the reservoir.

HYDRAULIC FOOTBRAKE SYSTEM

Overhaul instructions

If it is found necessary to dismantle the brake system, or any part thereof, this must be done under conditions of scrupulous cleanliness. Clean off all dirt and grease before removing any parts. Do not swill a dismantled unit in gasoline, kerosene or trichloroethylene, etc., because these solvents will ruin the rubber parts. Dismantle the units on a bench covered with a sheet of clean paper. Do not touch internal parts with dirty hands, particulary rubber items. After dismantling, place all metal parts in a tray of clean brake fluid to soak. Having done this, dry off with a clean, lint-free cloth and lay the parts out in order on a sheet of clean paper. To ensure unfailing reliability, we would recommend that all rubber parts be replaced by new ones. These are readily available in the form of repair kits containing all the rubber parts required for each particular unit.

The main bodies of units may be swilled in industrial methylated spirit or brake fluid, but if spirit is used all traces must be dried out before reassembly. All internal parts should be dipped in brake fluid according to Spec. **SAE J 1703a or SAE 70 R3 and assembled wet.**

Inspection

For reasons of safety, it is of the utmost importance for the hydraulic system to be checked at regular intervals as prescribed in the service book.

Bearing this in mind, carry out the following measures:

After 36,000 miles (60,000 km) or every 3 years

Renew all brake hoses, rubber cups and rubber seals throughout the hydraulic system, and change brake fluid.

BRAKE FLUID

General

Always keep the brake-fluid reservoir properly filled. Check the level every 6.000 miles (10.000 km) or every three months, whichever comes first.

It is essential to use the right brake fluid. Inferior brake fluids can seriously damage the entire brake system. Apart from ruining rubber cups and seals, such fluids may lack lubricating properties and initiate corrosion. Furthermore, they may be excessively viscous at low temperatures or have a low boilling point, which would cause vaporization in the system upon heavy brake applications. This would result in brake failure, the consequences of which could be disastrous.

Even the best brake fluids deteriorate after prolonged use, owing to oxidation and absorption of water, which lowers the boiling point.

For racing and rallying, and for driving in mountainous territory, brake fluid should be changed at yearly intervals.

Normally, brake fluid should be changed in all models after any repairs to the brake system and once every three years or every 35.000 miles (60.000 km).

The brake fluid shall always be kept in a closed container.

IMPORTANT

Use only brake fluid satisfying the minimum requirements of specifikation, **SAE J 1703 a or SAE 70 R 3.**

Replenishing

Before unscrewing the filler cap, clean the top part of the brake-fluid reservoir to prevent dirt entering when the cap is removed. Be careful not to spill any brake fluid on the paintwork of the car when pouring in brake fluid, as this fluid is injurious to paint. Check that the air vents in the filler cap are not chocked.

If brake-fluid consumption is found to be excessive, examine all lines, hoses, connections and cylinders in order to detect and remedy the leak, applying firm pressure to the brake pedal meanwihle.

Changing

To change brake fluid, proceed as described in the following:

1. Open the primary circuit bleed nipples (left front and right rear wheel) and connect hoses as when bleeding. Pump the brake pedal until the fluid container is almost empty. Fill new fluid and continue pumping until the entire system is filled with new fluid.
   Close the bleed nipples.
   Repeat the procedure for the secondary circuit (right front and left rear wheel). Pump trough at least half a quart (half a liter). Replenish the container.
2. Bleed the brake system.

Bleeding the brake system

Bleeding is not a routine service measure and is necessary only when part of the brake system has been disassembled and when the brake fluid has been drained off. Sure signs that air has entered the system are axcessive pedal travel, springy pedal action or absence of braking effect until the brake pedal has been firmly depressed several times.

A bleed nipple is provided for each wheel. Bleed nipples for the disc brakes are located on the brake cylinder.

LOCATION OF BLEEDING NIPPLES, REAR END

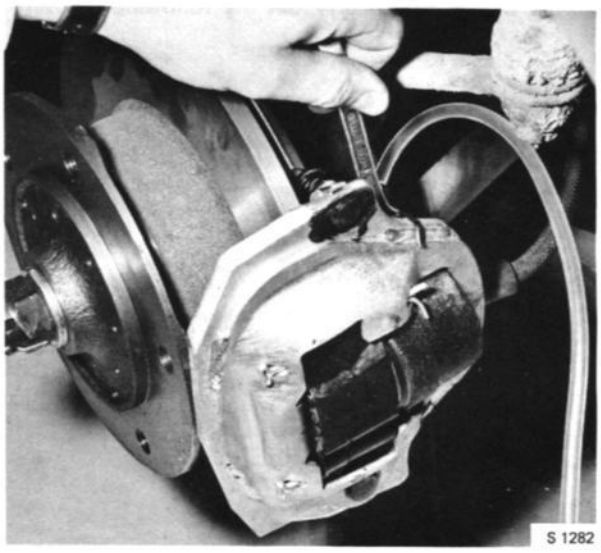

LOCATION OF BLEEDING NIPPLE, FRONT END.

The best result is obtained with the aid of bleeding equipment. The makers instructions should be followed. Bleeding can also be done according to the following description.

1. Check that the reservoir is completely full of brake fluid and that the air vents in the reservoir cover are not choked.
2. Bleed either one wheel at a time or two wheels at the same time. One circuit should be bled completely before bleeding of the other circuit is started. Up to and incl. model 1970 (make Lockheed) the left front wheel and the right rear wheel must be bled first.
3. Fit suitable hoses to the bleed nipples on both wheels.
4. Dip the hose end in a glass vessel containing clean brake fluid.
5. Back off both nipples 1/2—1 turn.
6. Have an assistant pump the brake pedal and watch until escaping brake fluid is free of air bubbles. Keep the hose ends below the fluid level in the glass vessel the whole time.
7. Close the bleed nipples, keeping the pedal depressed meanwhile.
8. Check that the brake fluid in the reservoir does not run out while the system is being bled.
9. Top up the reservoir with fresh brake fluid after bleeding the two circuits.

MASTER CYLINDER UP TO AND INCL. MODEL 1968

General

At intervals not exceeding three years or 35,000 miles (60,000 km), or at each third change of a brake lining, whichever occurs first, renew all rubber cups and seals throughout the hydraulic system. If it is necessary to dismantle the brake system, or any part thereof, this must be done under conditions of scrupulous cleanliness. See Section 520.

Removal

1. Disconnect the connections for outlet brake lines from the master cylinder.
2. Remove the rubber boot from the push-rod, or back off the locking nut and unscrew the push-rod from the fork on the brake pedal.
3. Back off and remove the two master-cylinder retaining bolts. The lower one is a stud bolt and the nut is accessible from the engine compartment. The upper one is a screwbolt, accessible from inside the car.
4. Remove the master cylinder.

Installation

1. Cover all openings to prevent the entry of foreign matter into the cylinder during the installation work.
2. Attach the brake cylinder.
3. Refit the rubber boot to the push-rod. Reassemble the push-rod if it has been disassembled.
4. Reconnect the outlet brake lines and refill the system with brake fluid.
5. Adjust the brake-pedal free movement. See Section 524.
6. Bleed the system. See Section 520.

OVERHAUL OF MASTER CYLINDER

The master cylinder should only be dismantled if there is no exchange system for this unit.

Dismantling

1. Remove the rubber bellows 11 together with retaining plate 8 and the push rod 31.
2. Press down the spring retainer 30 and remove the spiral clip 29 with the aid of a small screwdriver.
3. Remove the outer lock ring 28, the nylon bearing 27, the cup 26, and the washer 25.
4. Remove the inner lock ring 24 with the aid of special tool 784199 and remove the pistons.

> NOTE
> Be carefull when removing the locking ring and the washer so that the surface of the pistons not be damaged.

5. Compress the intermediate spring 18 together with spring holder 20 and drive out the retaining pin 19, using a suitable pin punch. This will separate the two pistons 10 and 14, and allows the withdrawal of the spring 18 and spring holder 20.
   Note! It is not possible to remove the clip 17 on the secondary piston.
6. Withdraw the non-return valves. Take care not to distort the spring clip 44 when removing it from the valve body.
7. Remove the six bolts retaining the cover of the brake-fluid reservoir 5 and take off the cover together with the gasket.

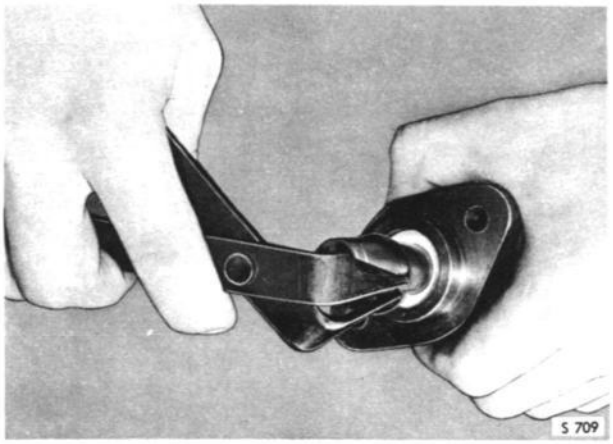

REMOVING THE LOCK RING
1. Tool 784199

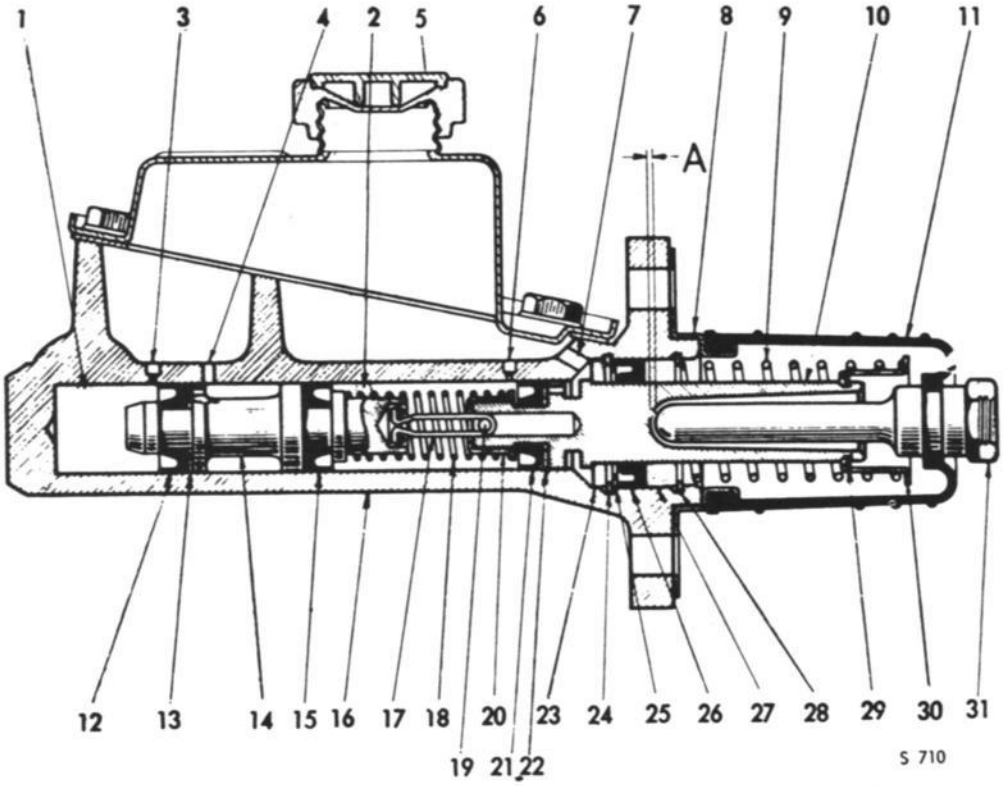

MASTER CYLINDER, SECTIONED, UP TO AND INCL. MODEL 1968

A = 0.024—0.047 in. (0.6—1.2 mm)

MASTER CYLINDER FOR TWO-CIRCUIT BRAKE

1. Outlet to one circuit
2. Outlet to other circuit
3. Bypass port
4. Feed hole
5. Brake-fluid reservoir
6. Bypass port
7. Feed hole
8. Retaining plate
9. Spring
10. Primary piston
11. Rubber boot
12. Primary cup
13. Piston washer
14. Secondary piston
15. Secondary cup
16. Body
17. Clip
18. Spring
19. Retaining pin
20. Spring holder
21. Primary cup
22. Piston washer
23. Piston stop
24. Circlip
25. Washer
26. Secondary cup
27. Guide bearing
28. Circlip
29. "Spirolox" circlip
30. Spring retainer
31. Push-rod

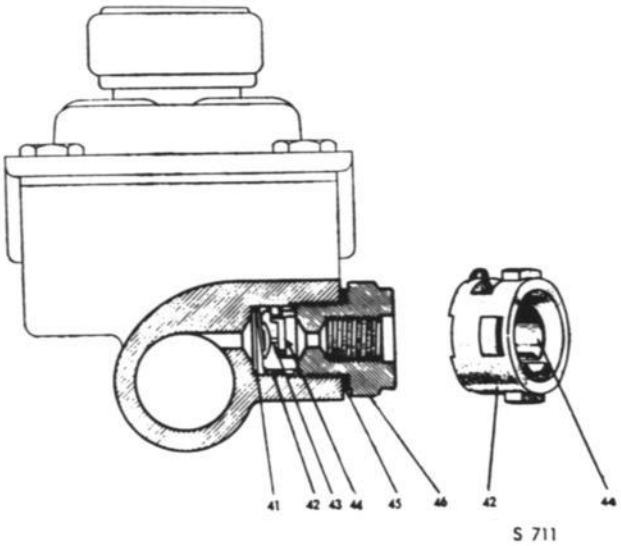

NON-RETURN VALVE IN MASTER CYLINDER

41. Spring
42. Valve body
43. Equalizing hole
44. Spring clip
45. Gasket
46. Adapter

Inspection

1. Check that the cylinder bore is not scored.
2. Check that the bypass holes are clean by probing with a piece of thin steel wire.
3. Check all parts, and renew any defective ones.
   Internal rubber parts should be replaced by new ones, which are available in suitable kits.

Reassembly

Before reassembling the master cylinder, dip all parts in brake fluid.

1. Locate the cups on the pistons and check that they are correctly positioned, see fig.

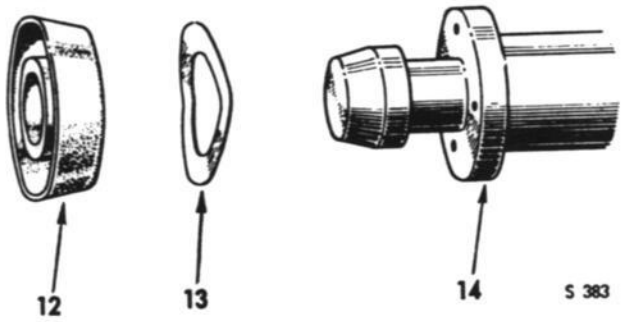

FITTING THE PISTON WASHER

12. Primary cup
13. Piston washer (dished)
14. Secondary piston

2. Install the spring 18 on the pistons and press them together so that the retaining pin 19 can be installed.
3. Fit the pistons in the cylinder. Note! Be carefull so that the gaskets not be damaged.
4. Install the piston stop 23.
5. Mount spiral clip 24 with the aid of tool 784199.
6. Install the washer 25, the secondary cup 26 and the nylon bearing 27. Lock with spiral clip 28.
7. Install spring 9 and spring retainer 30 on the primary piston 10.
8. Conpress the retain spring 9 and install the spiral clip 29.
9. Lubricate the small end of the push-rod 31 with silicon grease and install the rubber bellows 11 with retainer 8.
10. Screw on the outlet adapters and non return-valves. Tighten to 28 ft. lb. (3.8 kpm).
11. Install the cover 5 and tighten the screws to 6 ft. lb. (0.7 kpm).

MASTER CYLINDER AS FROM MODEL 1969

General

At intervals not exceeding three years or 35.000 miles (60.000 km), or at every third change of brake linings, whichever occurs first, renew all rubber cups and seals throughout the hydraulic system. If it is necessary to dismantle the brake system, or any part thereof, this must be done under conditions of scrupublous cleanliness. See Section 520.

Removal and installation of master cylinder with vacuum servo

1. Remove the protective cover of the steering wheel shaft.
2. Loosen the screw joints of the outlet brakelines at the master cylinder. Disconnect the vacuum hose from the vacuum servo.
3. Detach the push-rod at the brake pedal.
4. Loosen the four nuts retaining the vacuum servo to the dash panel. The nuts are accessible from inside the car. Remove the master cylinder.
   The installation is made in the reverse order.

Removal and installation of master cylinder

When removing and installing the master cylinder, it is not necessary to remove the vacuum servo.

1. Loosen the screw joints of the outlet brake lines at the master cylinder.
2. Remove the two nuts retaining the master cylinder to the vacuum servo.
3. Remove the master cylinder.
   The installation is made in the reverse sequence.

Bleeding the brake system, see section 520.

OVERHAUL OF MASTER CYLINDER MODEL 1969–1970

The master cylinder should only be dismantled if there is no exchange system for this unit.

Dismantling

1. Depress the spring retainer (30) and, using a small screwdriver, unwind the Spiral clip (29) from the groove of the primary piston, taking care not to distort the coils; remove the spring retainer (30) together with the spring (8). Remove the washer (28) and the gasket (27).
2. Remove the circlip (26), taking great care not to damage the surface finish of the primary piston (9). Lightly tap the mounting flange of the cylinder body on the bench, and remove the nylon guide bearing (25), the secondary cup (24) and the plain washer (23).
3. Using special circlip pliers with long, narrow jaws, tool 784199 remove the inner circlip (22), again taking great care not to damage the surface finish of the primary piston (9).

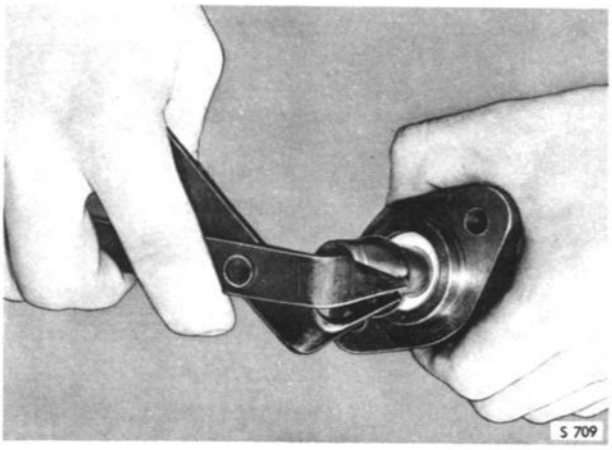

REMOVING THE LOCK RING
1. Tool 784199

4. Removal of the circlip will allow the withdrawal of both pistons together with the piston stop (21).
5. Compress the intermediate spring (16) together with spring holder (18) and drive out the retaining pin (17), using a suitable pin punch. This will separate the two pistons (9 and 12), and allows the withdrawal of the spring (16) and spring holder (18).
6. Remove the primary cups (10 and 19) together with the piston washers (11 and 20) from the primary and secondary pistons. Remove the secondary cup (13) from the back of the secondary piston. Do not attempt to move the clip (15) from the secondary piston, as this part is permanently peened in position.
7. Unscrew the outlet adapters (31) and remove them together with the gaskets.
8. Withdraw the non-return valves, comprising the spring (32), valve body (33) and spring clip (34). Take care not to distort the spring clip (34) when removing it from the valve body.
9. Remove the 4 bolts retaining the cover of the brake-fluid reservoir (5) and take off the cover together with the gasket.

Inspection

1. Check that the cylinder bore is not scored.
2. Check that the bypass holes are clean by probing with a piece of thin steel wire.
3. Check all parts, and renew any defective ones.
   Internal rubber parts should be replaced by new ones, which are available in suitable kits.

Reassembly

Before reassembling the master cylinder, dip all parts in brake fluid.

1. Using the fingers only, stretch the secondary cup (13) over the large end of the secondary piston with the lip pointing towards the peened clip. Gently work round the cup with the fingers to ensure correct bedding.
2. Locate the piston washer on the secondary piston spigot as illustrated in the fig. below, so that the convex edge is towards the back of the cup. Using the fingers only, ease the primary cup (10) over the nose of the spigot and into the groove, with the lip of the cup pointing away from the head of the piston.

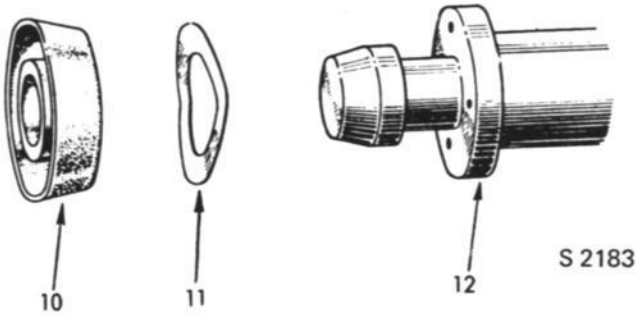

FITTING THE PISTON WASHER

10. Primary cup
11. Piston washer (dished)
12. Secondary piston

3. Adopt the same procedure with the primary cup (19) and piston washer (20) of the primary piston. Ease the spring holder (18) into the end of the spring (16) and fit the other end of the spring over the rear of the secondary piston (12).

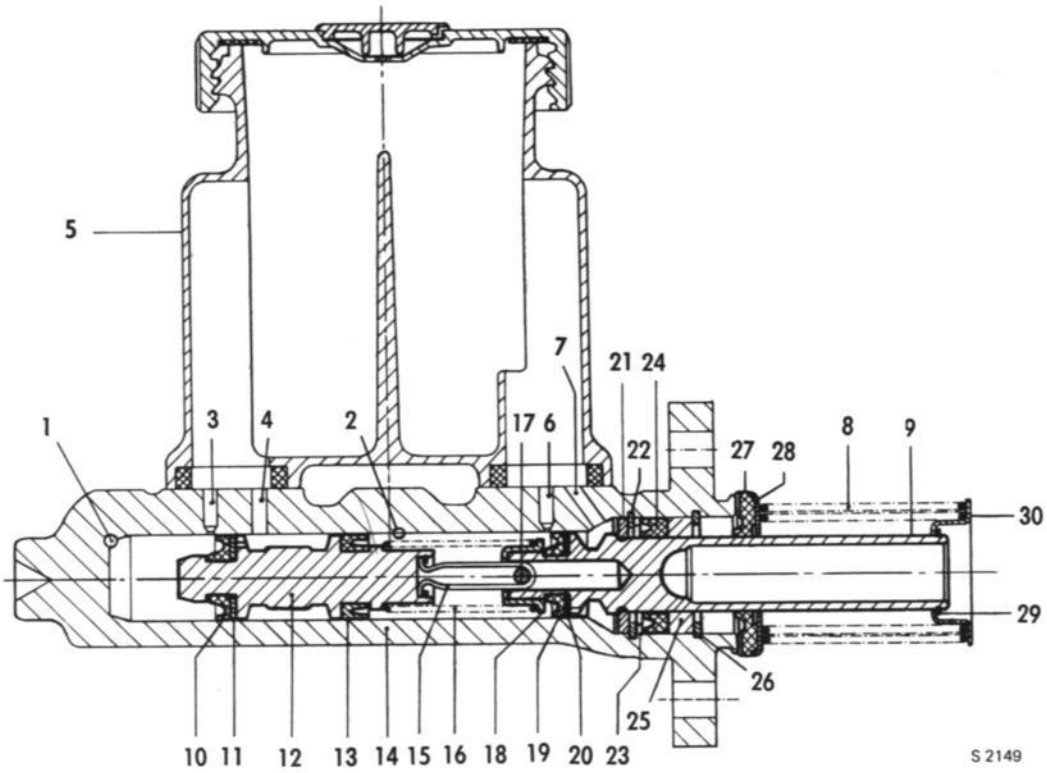

MASTER CYLINDER, SECTIONED, MODEL 1969–1970

1. Outlet to one circuit
2. Outlet to the other circuit
3. Bypass port
4. Feed hole
5. Brake-fluid reservoir
6. Bypass port
7. Feed hole
8. Spring
9. Primary piston
10. Primary cup
11. Piston washer
12. Secondary piston
13. Secondary cup
14. Body
15. Wire clip
16. Spring
17. Retaining pin
18. Spring holder
19. Primary cup
20. Piston washer
21. Piston stop ring
22. Circlip
23. Washer
24. Secondary cup
25. Guide bearing
26. Circlip
27. Gasket
28. Washer
29. "Spirolox" circlip
30. Spring retainer

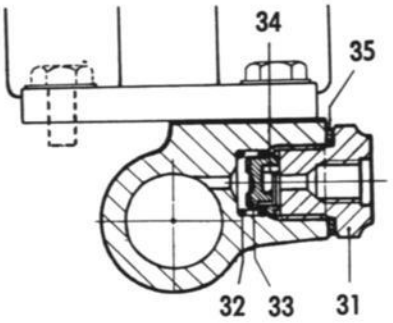

NON-RETURN VALVE

31. Outlet screw-joint
32. Spring
33. Valve body
34. Valve spring
35. Gasket

4. Locate the retaining pin (17) in the hole in the primary piston, but do not push fully home. Compress the spring until the secondary piston clip (15) is visible. Place the clip in position in the primary piston and secure it by pushing the retaining pin fully home. Release the spring and check that the spring holder (18) is correctly positioned.
5. Ease the pistons gently into the cylinder bore and slide the piston stop (21) over the primary piston. Fit the circlip (22) in the inner groove, using special circlip pliers with long, narrow jaws, tool 784199, and check that it is correctly located. Take great care not to damage the surface finish of the primary piston since this could cause leakage past the secondary cup.
6. Fit the plain washer (23) into the cylinder bore against the circlip, followed by the secondary cup (24).
7. Place the nylon guide bearing (25) in position and secure with the outer circlip (26). Fit the gasket (27) and the washer (28).
8. Mount the return spring (8) and the spring retainer (30) on the primary piston (9). Compress the spring until the piston circlip groove is visible behind the spring retainer and locate the spiral circlip (29).
9. Ease the spring clip (34) into the non-return valve body and check that it is correctly positioned. Fit the return spring over the valve body and locate the parts within the outlet port, inserting the spring first.
10. Screw the outlet adapter (31), together with the gasget (35) into the outlet port and tighten to a torque of 28 ft-lb (3,8 kpm). Adopt the same procedure for the remaining outlet port.
11. Place the brake-fluid reservoir (5) in position together with the gaskets, and tighten the four bolts.

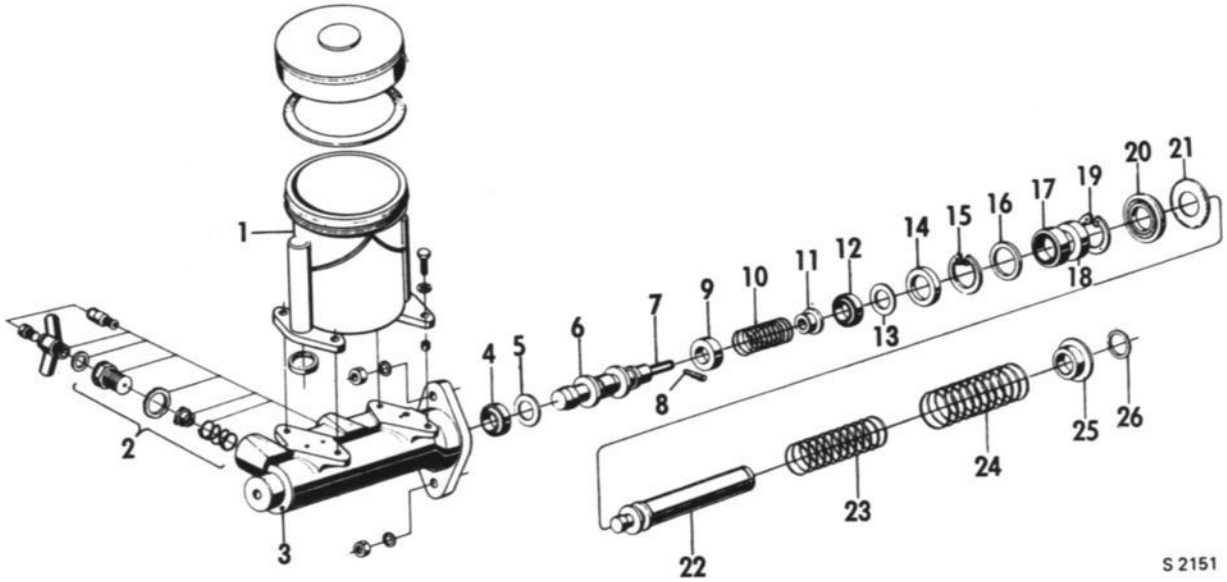

MASTER CYLINDER MODEL 1969–1970 EXPLODED VIEW

1. Brake fluid reservoir
2. Non-return valve
3. Body
4. Primary cup
5. Piston washer
6. Secondary piston
7. Wire clamp
8. Lock pin
9. Secondary cup
10. Spring
11. Spring holder
12. Primary cup
13. Piston washer
14. Piston stop
15. Lock ring
16. Washer
17. Secondary cup
18. Guide bearing
19. Lock ring
20. Gasket
21. Washer
22. Primary piston
23. Spring
24. Spring
25. Spring holder
26. "Spirolox" clip

OVERHAUL OF MASTER CYLINDER AS FROM MODEL 1971

Dismantling

1. Separate the power assist unit from the master cylinder by backing off the nuts from the two retaining bolts.
2. Remove the lock ring (10) that holds the primary piston (12) in place.
3. Back off the stop screw (13).
4. Pull out the primary piston (12) with spring (5) and the secondary piston (4) with spring (5) and seals.
5. To change the seal ring (6) on the primary piston, the screw (9) with spring must be completely unscrewed and the spring retainer, support ring and support washer removed to gain access to the seal ring.

Inspection

1. Check that the cylinder bore is not scratched.
2. Check that the through-flow holes are clear by testing with a fine iron wire.
3. Check all parts and exchange any that are worn or defective.

Rubber gaskets and seals should be replaced by new ones. Repair kits containing complete replacement sets of rubber gaskets and seals are available.

Reassembly– installation

(Dip all parts in brake fluid before assembling.)

1. Insert the secondary piston (4) with spring and seals.
2. Insert the primary piston (12) with spring and seals.
3. Fit the lock ring (10).
4. Bolt the master cylinder to the power assist unit.
5. Cover all openings to keep dirt out of the cylinder during installation.
6. Fit the master cylinder complete with power assist unit to the dash panel and connect the push rod to the brake pedal.
7. Connect the brake lines.
8. Connect the vacuum hose and the clip that holds the speedometer cable to the power assist unit.
9. Mount the air cleaner.
10. Fill the container with brake fluid and bleed system.

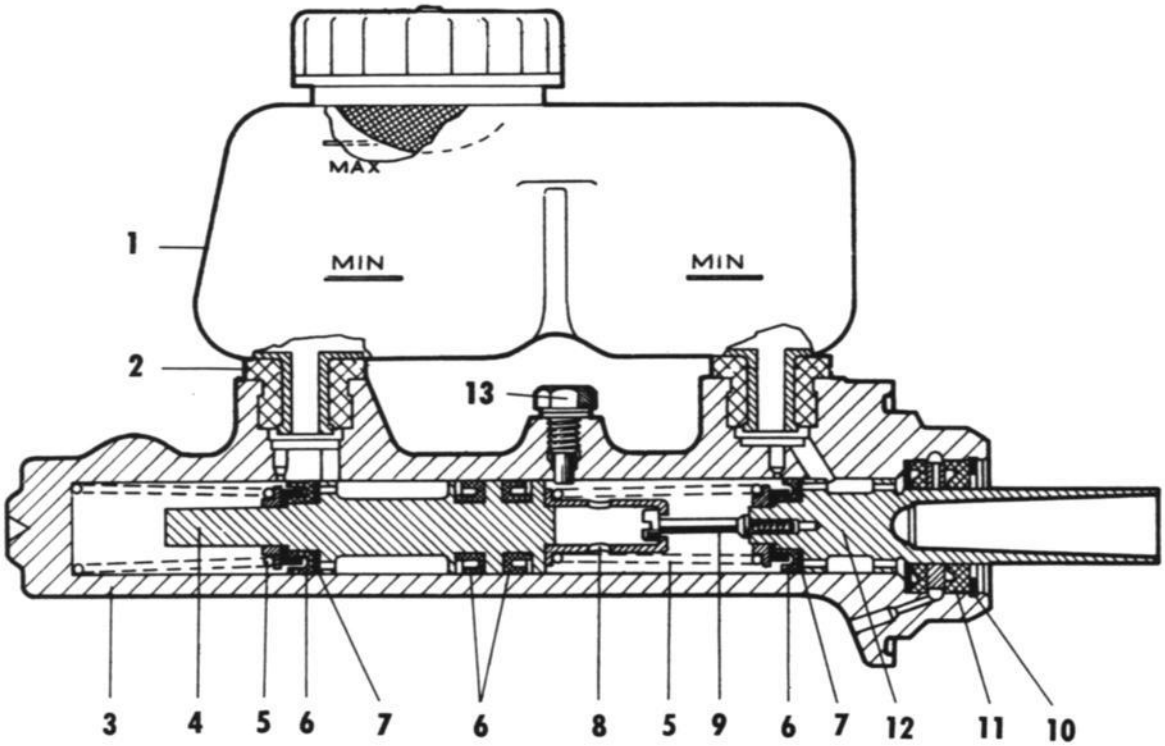

MASTER CYLINDER, AS FROM MODEL 1971

S 1721

1. Container
2. Rubber seal
3. Housing
4. Secondary piston
5. Spring
6. Piston seals
7. Washer
8. Sleeve
9. Screw
10. Lock ring
11. Seal ring
12. Primary piston
13. Screw

BRAKE LINES

Brake lines and fittings

The brake pipers are of 3/16 in. Bundy tube. The ends of all the pipes are flanged and fitted with compression nuts, which must be passed onto the pipes before the ends are flanged. It is important to ensure that the pipes are properly flanged so that there will be no leakage at the joints. See fig. For reasons of safety, it is essential that all pipes, rubber hoses and connections in the brake system be kept in first-class condition at all times. Bearing this in mind, check regularly that the hoses have not been damaged by flying stones or by abraison. Pipes, too, must be installed so that they cannot rub or chafe against anything.

Check that the pipes are correctly arranged beneath the rear seat, and that the pipes do not rub against plating.

All pipe and hose connections must be properly tightened to ensure leak-free joinst. Make sure that the copper gaskets in the pipe connections are flawless, and change any defective ones. Copper gaskets which have become so hard that they no longer seal effectively may, however, be annealed and reused.

Pipes which are to be installed must fit well at both ends and at the clips. Never stretch a badly-fitting pipe by means of the compression nuts or bend an already fitted pipe. Both of these courses could give rise to stresses which may result in leakage, pipe fracture or stripped threads.

Pipes for connection to brake hoses are flanged as per "type A". Other pipes are flanged as per "type B".

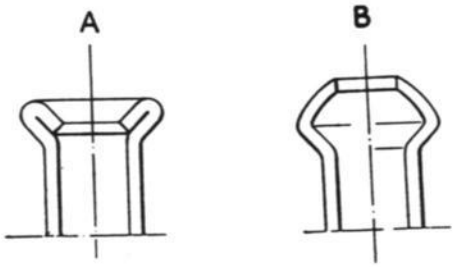

FLANGING OF BUNDY TUBE

Brake hoses

The brake system incorporates two front and two rear brake hoses, affording the communication between the body and the wheel cylinders. These hoses are of different lengths and must not be confused. Install the hoses with the wheels freely suspended and aligned straight ahead. When tightening the brake pipe, hold the brake-hose nipple (not the locking nut) to prevent the hose from twisting and changing position.

> WARNING
>
> When fitting brake hoses it is highly important to position them correctly, thereby ensuring that steering or suspension movements do not bring them into contact with other parts of the car. The brake hoses must not be wrung or twisted but shall be mounted in a neutral position. In addition, see to it that the front hoses form a downward directed curve.

Inspection

All brake hoses and pipes should be inspected every 12,000 miles (20,000 km) for any signs of leakage, chafing or other deterioration. At the slightest sign of damage, renew the hose or pipe concerned. For safety's sake, change all brake hoses every 35,000 miles (60.000 km) or every three years, whichever is first.

WHEEL CYLINDERS

General

All work on the brake system must be done under conditions of scrupulous cleanliness and carefulness. See the instructions in Section 520.

At intervals not exceeding three years or 35,000 miles (60.000 km), or at each third change of a brake lining, whichever occurs first, renew all rubber cups and seals throughout the hydraulic system.

REAR WHEEL CYLINDERS, SAAB 95, 96

The SAAB 96 is equipped with smaller wheel cylinders at rear than those of the Saab 95.

The location of their steady pins differs from that of the Saab 95 — with a view to avoid misfitting.

As from model 1970, SAAB 95 is equipped with rear wheel brake cylinders of the same dimension (5/8") as those earlier used in the SAAB 96.

> WARNING!
> The steady pin must not be removed, same securing the wheel cylinder to the backplate.

Removal

1. Remove the wheel, brake drum and brake shoes.
2. Disconnect the handbrake wire from the levers.
3. Disconnect the brake line from the rear of the backplate.
4. Remove the wheel cylinder retaining ring and the bleed nipple from the rear of the backplate.
5. Remove the wheel cylinder.

Disassembly

1. Remove the rubber boots from the cylinder.
2. Pull out the pistons.
3. Take the rubber seals off the pistons.

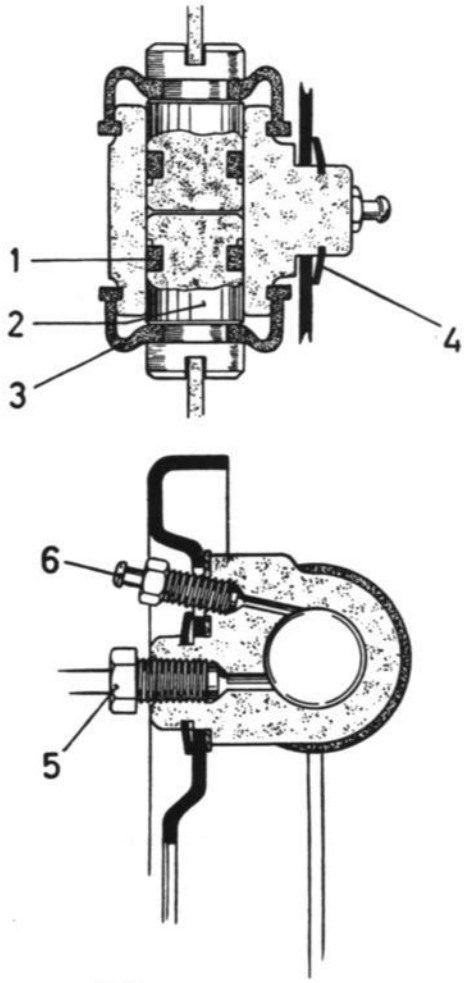

REAR WHEEL CYLINDER

1. Piston cup
2. Piston
3. Rubber boot
4. Retainer
5. Brake hose connection
6. Bleeding nipple

Inspection

1. Clean all parts with brake fluid.

> NOTE
> Do not allow gasoline or oil come into contact with the rubber sealing rings or boots.

2. Check that the cylinder bore is unscored.
3. Check that the rubber sealing rings and boots are flawless. The use of unsuitable brake fluids can cause rubber parts to swell by up to 50 %. Any rubber parts that are even slightly damaged or swollen must be renewed.

Reassembly

Scrupulous cleanliness must be observed when reassembling the wheel cylinder. Lubricate the cylinder bore, seals, cups and pistons with brake fluid before reassembling. Reassemble as shown in the illustration, making sure that the piston seal is facing the right way. Use the fingers only.

Installation

1. Refit the wheel cylinder to the backplate and locate the retaining ring and bleed nipple. The cylinder has a steady pin, a hole to receive this being provided in the backplate.
2. Reconnect the brake line.
3. Refit the brake shoes, brake drum and wheel, taking great care not to damage the axle seal.
4. Reconnect the handbrake wire. Nore that the handbrake lever must be installed with the bent part facing upwards. See fig.

Remember to bleed the system whenever a brake line or a wheel cylinder has been removed.

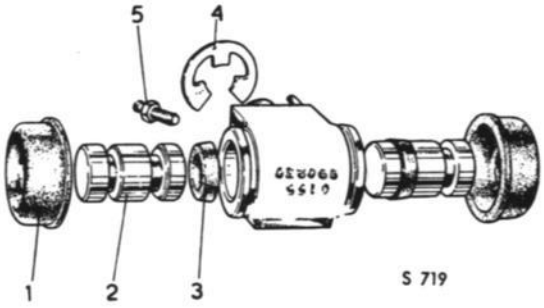

REAR WHEEL CYLINDER

1. Rubber boot
2. Piston
3. Piston seal
4. Locking washer
5. Bleed nipple

ATTACHMENT OF REAR WHEEL CYLINDER

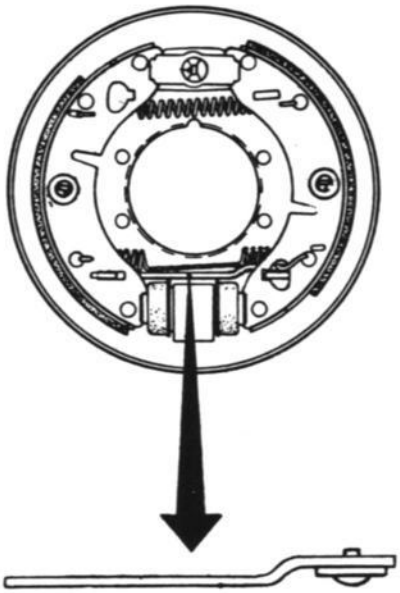

FITTING THE HANDBRAKE LEVER

DISC BRAKES

Removal of brake pistons and seals

For this task, a special screw wise (tool No. 786043) will be required.

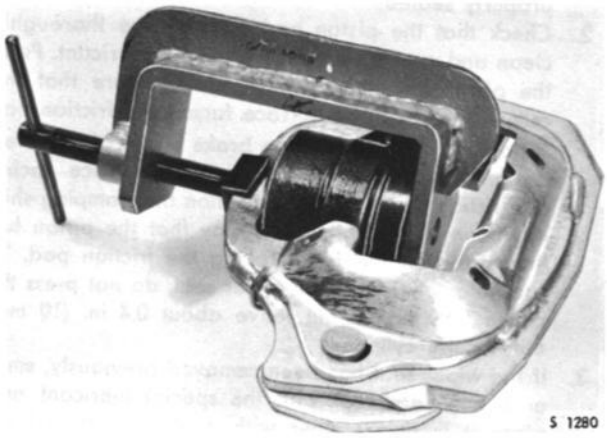

SCREW VISE, TOOL 786043

1. Remove the friction pads as described previously.
2. Bend up the retaining plates and remove the two retaining bolts which hold the brake housing to the steering knuckle housing. Lift the brake housing away from the brake disc. Do not disconnect the brake hose, but place the brake housing so that the hose does not get stretched.

NOTE
Never allow the brake housing to hang from the brake hose. Collect the brake fluid when the piston is removed.

3. Press the brake pedal down carefully, thus forcing the piston out far enough for it to be taken off by hand. Keep a clean container handy, so that you will be able to collect the brake fluid when the piston is removed.
4. Disconnect the brake hose from the brake cylinder. Insert a plug in the hose to prevent the escape of the brake fluid and also to prevent the entry of impurities into the system.
5. Remove the two springs which hold the cylinder in place and remove the cylinder.
6. If the piston seal needs replacing, it can now be removed from its groove in the cylinder.
7. If it is necessary to remove the wiper seal, it can now be taken out with the aid of a screwdriver.

IMPORTANT
Always use either brake fluid or denatured alcohol (methylated spirit) for cleaning.

Reassembly of brake piston and seals

1. Coat a new, dry seal with special lubricant (Lockheed Disc Brake Lubricant) and place it carefully in its groove in the cylinder, making sure that it is properly seated.
2. Check that the piston and cylinder are thoroughly clean and coat them with the special lubricant. Press the piston into the cylinder, making sure that the recess in the contact surface facing the friction pad is pointing downwards. The brake piston of the latest design has a face-ground contact surface facing the friction pad. In this connection the damping shim has been altered in such a way that the piston has the corresponding fit-up facing the friction pad. To facilitate refitting of the wiper seal, do not press the piston fully home, but leave about 0.4 in. (10 mm) outside the cylinder.
3. If the wiper seal has been removed previously, smear a new, dry seal with the special lubricant and place it in the retainer with its groove turned towards the piston.

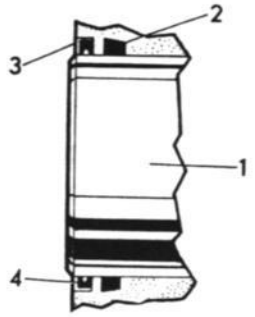

S 1286

FITTING THE WIPER SEAL

1. Piston
2. Piston seal
3. Seal retainer, wiper seal
4. Wiper seal

4. Press the retainer and seal home with the aid of a screw vise and distance piece 786043, see fig.
5. Replace the brake cylinder in the brake body assembly and refit the springs.
6. Remove the plug from the brake hose, fit a new copper washer and tighten the hose securely in the cylinder.
7. Put the brake in place and tighten the retaining bolts. Remember to secure the bolts with the retaining plate.

WARNING
Make quite sure that the brake hose is not twisted. If it is not mounted in a neutral position, slacken its attachment at the wheel housing and then retighten it in the correct position.

8. Refit the friction pads, spring and new cotter pins as described earlier.

NOTE
Fit a new spring if the old one seems to be exhausted.

9. Bleed the brake system and pump repeatedly up and down with the brake pedal in order to adjust the friction pads in against the disc. Top up with brake fluid in the reservoir.

WARNING
Do not forget to pump repeatedly with the brake pedal, as otherwise the pedal will go all the way down when the brakes are applied.

Replacement of complete brake cylinder

Disassembly

1. Remove the friction pads as described earlier.
2. Bend up the retaining plate and remove the two brake retaining bolts from the steering knuckle housing. Lift the brake away from the brake disc.
3. Disconnect the hose from the brake cylinder. Insert a plug in the hose to prevent the escape of brake fluid and also prevent the entry of impurities into the system.
4. Remove the two springs which hold the cylinder in place and remove the cylinder.
5. Clean the entire brake housing thoroughly.

> NOTE
> Take the opportunity to check for brake wear, especially on the hinge pin.

Reassembly

1. Insert the new brake cylinder in the brake body assembly and refit the springs.
2. Remove the plug from the brake hose, fit a new copper washer and tighten the hose securely in the cylinder.
3. Put the brake housing in place and tighten the retaining bolts. Remember to secure the bolts with the retaining plate.

> WARNING
> Make quite sure that the brake hose is not twisted. If it is not mounted in a neutral position, slacken its attachment at the wheel housing and then retighten it in the correct position.

4. Refit the friction pads, spring and new cotter pins as described earlier.

> NOTE
> Fit a new spring if the old one seems to be exhausted.

5. Bleed the brake system and pump repeatedly up and down with the brake pedal in order to adjust the friction pads in against the disc. Top up with brake fluid in the reservoir.

> WARNING
> Do not forget to pump repeatedly with the brake pedal, as otherwise the pedal will go all the way down when the brakes are applied.

Dismantling of brake body assembly and support bracket

If it should be necessary to replace the brake body assembly or the support bracket, these items can be disassembled as follows:

1. Remove the brake from the steering knuckle housing as described earlier.
2. Compress the spring on the hinge pin and take away the lock washer and spacer.
3. Remove the spring and lift the support bracket away from the hinge.
4. Reassembly takes place in the reverse order.

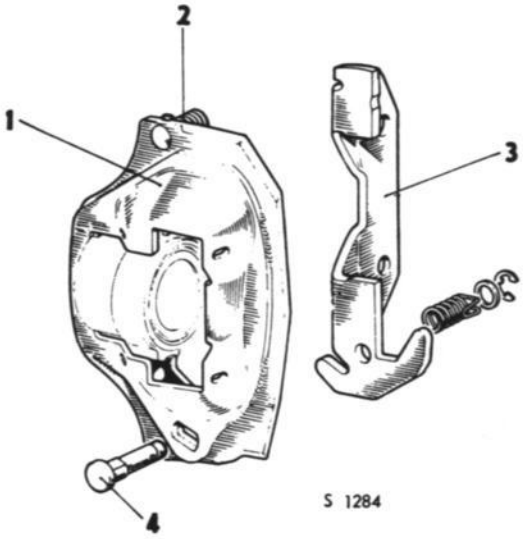

DISC BRAKE COMPONENTS

1. Brake body assembly
2. Spring loaded steady pin
3. Support bracket
4. Hinge pin

BRAKE OPERATION UP TO AND INCL. MODEL 1968

Brake pedal

The brake pedal is carried on the same shaft as the clutch pedal and is fitted with self-lubricating bushings.

Removal and installation

1. Remove the steering column and gear-shift shaft.
2. Detach the fork for the clutch cylinder from the clutch pedal.
3. Remove the cotter pins from both ends of the shaft.
4. Remove the clutch pedal and return spring from the shaft.
5. Unscrew the master cylinder push-rod at the adjusting nut.
6. Pull out the shaft leftwards and remove the brake pedal.
7. Check the bearing for wear and fit new bushings if necessary.
8. Reinstall in the reverse order, and then adjust the brake-pedal free movement.

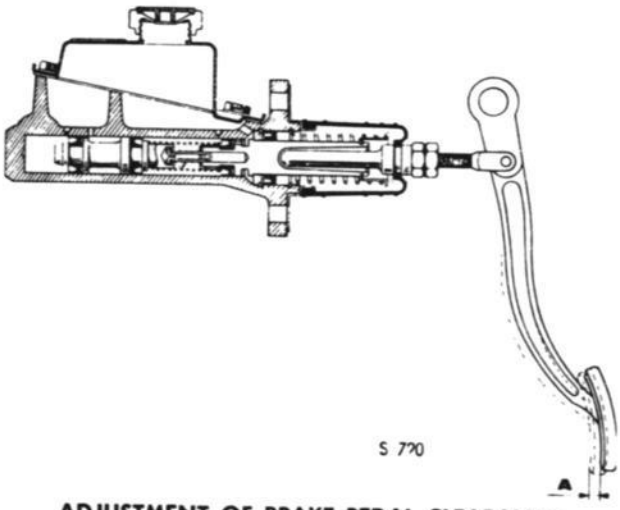

ADJUSTMENT OF BRAKE PEDAL CLEARANCE

A = 0,12—0,24 in. (3—6 mm)

Adjustment of brake-pedal free movement

In order to ensure that the piston in the master cylinder will return fully every time the brake pedal is released, there must always be a clearance between the master-cylinder piston and the brake-pedal push-rod when the pedal is at rest. This clearance, measured at the tip of the pedal, should be 0.12—0.24 in. (3—6 mm). Measured between the push-rod and the piston, the clearance should amount to 0.024—0.047 in. (0.6—1.2 mm). See fig.

Adjust as follows:

1. Back off the locking nut, see fig.
2. Turn the hexagonal part of the push-rod until the correct clearance is obtained at the tip of the pedal.
3. Tighten the locking nut.

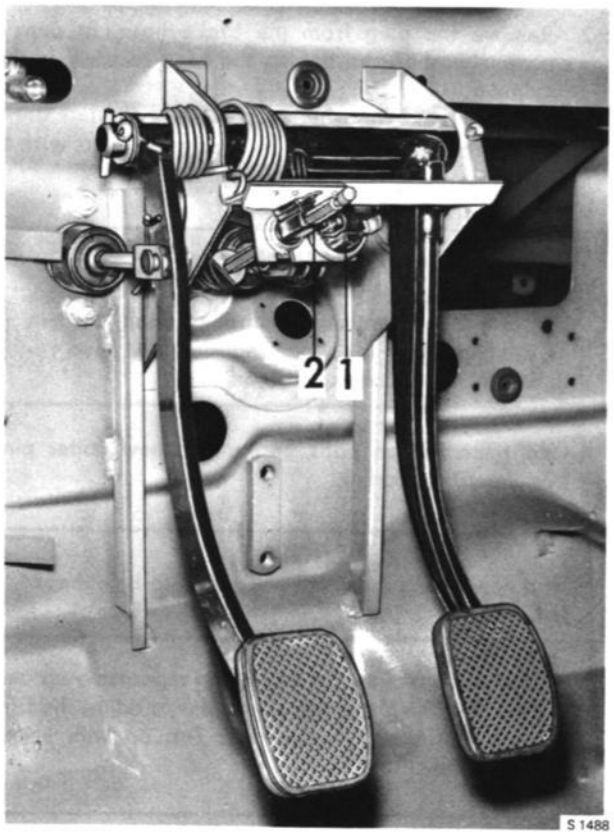

PEDAL STAND WITH PENDANT PEDALS

1. Stoplight switch
2. Brake warning contact

BRAKE OPERATION AS FROM MODEL 1969

Brake pedal

The brake pedal is carried on the same shaft as the clutch pedal and is equipped with self-lubricating bushings.

Removal and installation

1. Remove the protective cover of the steering wheel shaft.
2. Remove the bracket of the brake light- and the brake warning contacts.
3. Loosen the brake cylinder push-rod, by removing cotter pin and shaft bolt.
4. Loosen the clutch pedal spring.
5. Remove the cotter pin from the R.H. end of pedal shaft.
6. Pull the shaft out to the left, and remove brake pedal.
7. Check the bearing for wear, renew bushings as necessary. Installation is made in the reverse order.

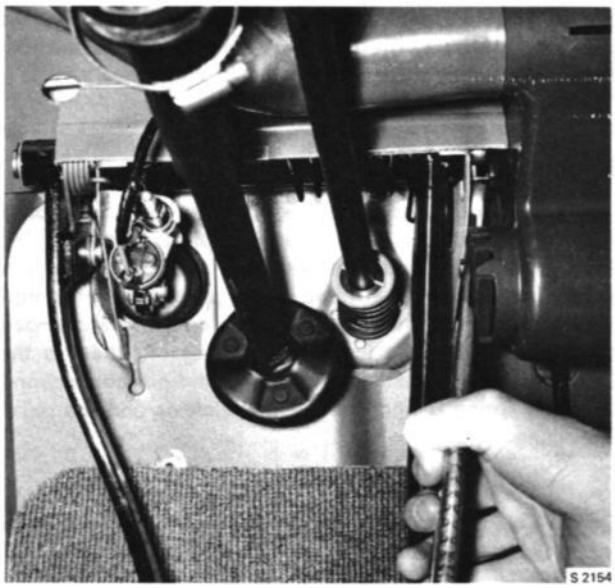

REMOVAL OF COTTER PIN

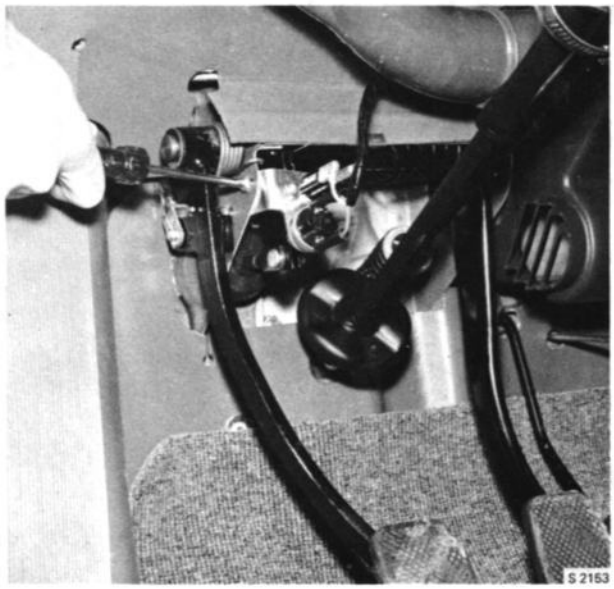

REMOVAL OF CONTACT BRACKET

HANDBRAKE OPERATION

General

The mechanical handbrake acts on the rear wheels only. When the handbrake lever is pulled, the movement is transmitted by the handbrake cables to levers on the rear-wheel brakes. These actuate the brake shoes mechanically, and press them against the brake drums.

Handbrake cables

The permanently lubricated handbrake cables comprise inner steel wires in plastic-coated spiral sheathing, led through a sleeve under the backrest cushion of the rear seat. The cables are fitted with protective grommets where they pass through panels. The cables are clamped to the rear axle, the inner wires being attached to the backplate levers by means of clevis-and-pin connections. A return spring is fitted between the clevis and the spiral sheathing.

Removal of handbrake cable

1. Remove one of the front seats and the rear-seat cushions. Jack up the car.
2. Remove the rear wheel.
3. Back off and remove the adjusting nut under the handbrake lever.
4. Pull the cable sheathing out of the sleeve under the rear-seat cushion.
5. Remove the clamps used to hold the cable to the rear axle.
6. Remove the pin holding the clevis on the brake lever.
7. Ease the grommet out of the inclined panel in the rear-axle tunnel.
8. Pull out the entire brake cable rearwards.

Installation of handbrake cable

1. If the grommet in the rear-axle tunnel has been removed, ease it on to the cable.
2. Pass the cable, threaded end first, up through the inclined panel in the rear-axle tunnel and on through the sleeve under the rear seat to the handbrake lever. Make sure that the grommet in the front inclined panel has not been dislocated.
3. Refit the adjusting nut.
4. Reconnect the clevis to the brake lever and secure the pin. See fig.
5. Fit the grommet in the inclined panel in the rear-axle tunnel and secure the cable to the rear axle with two clamps.

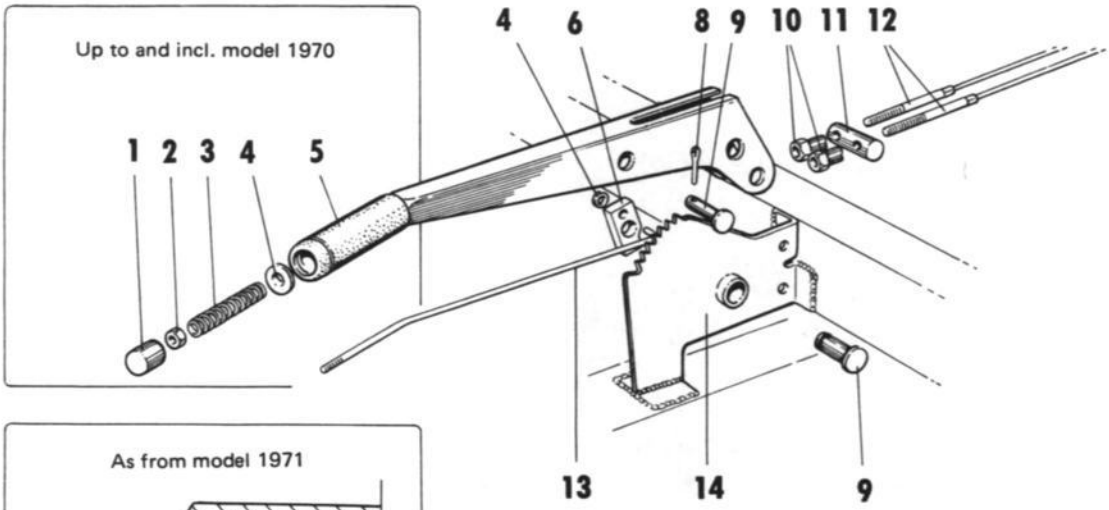

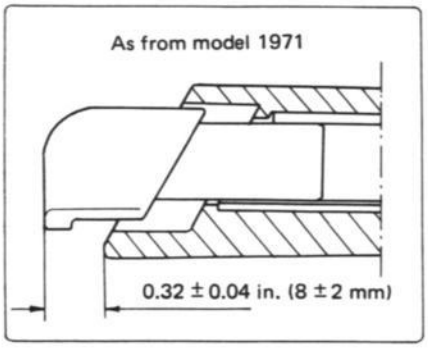

CHECKING MEASUREMENT WHEN INSTALLING THE BUTTON AS FROM MODEL 1971

S 2950

HAND BRAKE LEVER COMPONENTS

1. Release button
2. Nut
3. Return spring
4. Washer
5. Handbrake lever
6. Pawl
7. Spacer sleeves
8. Cotter pin or circlip
9. Pin
10. Adjusting nut
11. Cable pin
12. Threaded wire rods
13. Pawl rod
14. Ratchet

NOTE

Make sure that the spiral sheathing does not touch the brake pipe.

6. Refit the wheel.
7. Put back the cushions and seats and adjust the handbrake as described in Section 551.
8. Lower the car to the floor. Finally tighten the wheel bolts and refit the hub caps.
   Instructions for fitting the brake-shoe lever in the backplate are given in Section 511.

HANDBRAKE LEVER

See the illustration, which shows the handbrake lever and all its component parts.

Removal

1. Push back the front seats, possibly removing one of them to provide better accessibility.
2. Remove the rubber boot from the handbrake lever.
3. Back off and remove the adjusting nuts.
4. Remove the locking washer and the lever-bearing pin from the ratchet. Collect the spacer sleeves.
5. Remove the handbrake lever.

Installation

1. Refit the lever to the ratchet with spacers, pin and circlip.
2. Reconnect the brake wires to the lever.
3. Adjust the handbrake.
4.. Montera gummiskyddet

Disassembly of handbrake lever, up to and incl. model 1970

1. Remove the cotter pin and the pin for the pawl.
2. Slide the pawl lever out towards the handgrip.
3. Back off the locking nut and remove the release button, locking nut, spring and washer.
4. Remove the pawl rod, the pawl and the washer by the pawl.

Reassembly

1. Check that the spring, pawl, ratchet and pins are flawless.
2. Refit the ratchet mechanism in the lever. The release button should project about 0.4 in. (10 mm) beyond the brake-lever handgrip when the pawl engages with the ratchet.

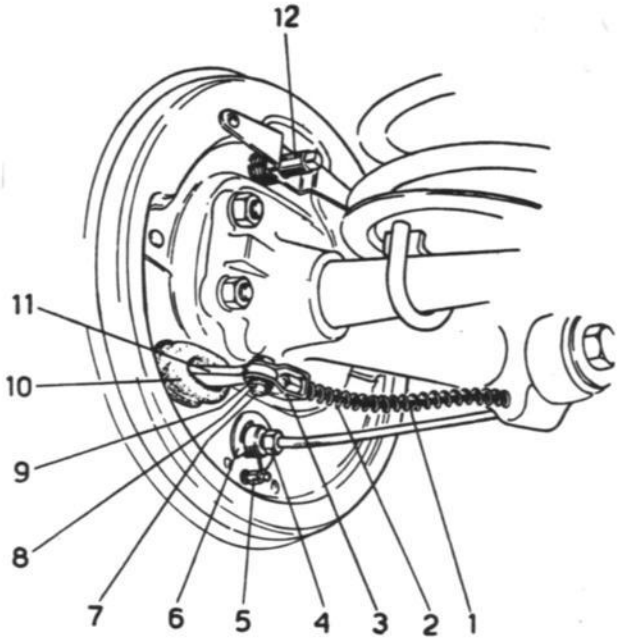

REVERSE SIDE OF REAR, LEFT BACKPLATE

1. Handbrake wire
2. Coil spring
3. Clevis
4. Brake-pipe connection
5. Bleed nipple
6. Locking washer
7. Pin
8. Cotter pin
9. Washer
10. Rubber boot
11. Brake lever
12. Adjustment device

Disassembly of handbrake lever, as from 1971 model

1. Remove the cotter pin and the shaft bolt for the pawl. Collect the washer.
2. Slide the pawl lever out and unscrew the button. Remove the return spring.
3. Remove the pawl rod and the pawl.

Reassembly

1. Before reassembling, check that all the parts are in perfect condition.
2. Mount the pawl on the pawl rod and insert the rod in the lever.
3. Refit the return spring. Screw the button on until it bottoms in the thread and then ,to ensure correct positioning, not more than one additional turn. Check the position of the button after having fitted the brake lever in the car. See sketch.
4. Refit the washer, the shaft bolt and the cotter pin.

ADJUSTMENT OF HANDBRAKE

Adjustment of handbrake lever travel or of the brake cables, which may be necessary after the car has been driven for a lengthy period or after removal of the handbrake lever, should always be preceded by adjustment of the footbrake. If the handbrake still requires adjustment, this can be done in the manner described below with the adjusting nuts 1, which are accessible from the driver's seat.

1. Jack up the rear part of the car so that both rear wheels are clear of the floor.
2. Remove the right front seat and move the handbrake lever to its bottom position.
3. Tighten the left adjusting nut until the brake shoe presses against the left drum. Use a suitable hex. socket wrench to tighten the nut.
4. Back off the nut enough to allow the wheel to rotate freely and then back off one more full turn.
5. Repeat this procedure with the right adjusting nut.
6. Test by pulling the handbrake lever firmly and then returning it to the bottom position. The wheels should turn freely when the lever has been pulled up two cogs from the off position, but should be locked at the third cog.
7. Check that the braking effect is equal on both wheels.

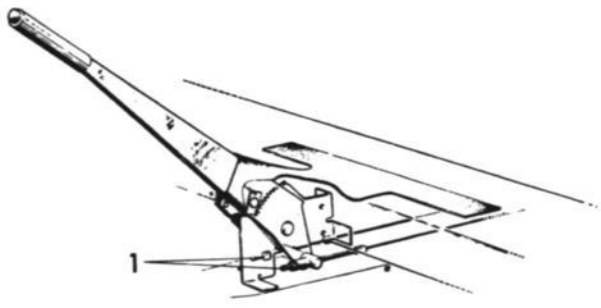

S 700

HANDBRAKE LEVER AND ADJUSTING NUTS

1. Adjusting nuts

> **NOTE**
>
> Always adjust the brake shoes before adjusting the handbrake.

CONTENTS

DESCRIPTION

General

All four wheels have coil springs. Each front wheel is attached to the steering knuckle, which is suspended thoroughly the medium of ball joints in two vee-shaped, transverse control arms. The inner ends of these control arms are carried in rubber-clad bearings on the body, and the vertical spring travel of the wheels is limited by rubber bumpers.

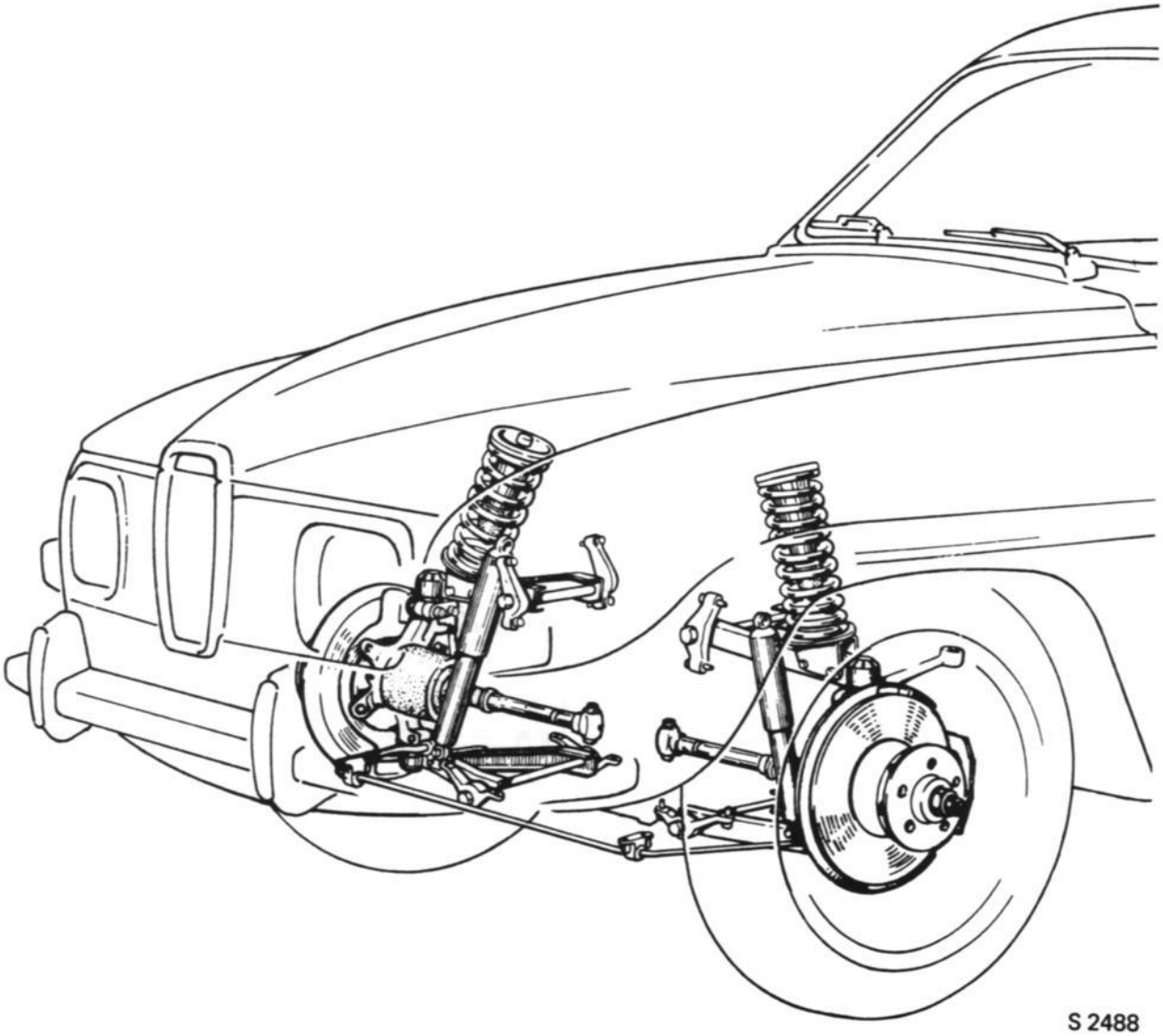

S 2488

FRONT AXLE AND SUSPENSION, SAAB 95 AND 96

Steering knuckle

The front assembly comprises one lefthand and one right-hand unit. A large, forged steering knuckle forms a frame for the front axle, its principal components being a bearing housing with two inward-inclined arms, an upper and a lower. The outer drive shaft is carried in a ball bearings enclosed in the bearing housing. The wheel hub with disc is mounted on the outer end of the drive shaft, while the backplate or brake housing with its front brake assembly is bolted to the steering knuckle.

Ball joints are attached to the steering knuckle arms, where they afford flexible connections for the ends of the control arms. The steering arm, to which the tie-rod is connected, is located on the upper steering knuckle arm. When the steering wheel is turned, the steering knuckle, together with the wheel hub and wheel, turns around an imagined axis — the king-pin axis — passing through the centers of both ball joints and intercepting the ground plane near the center line of the wheel. The outer and inner drive shafts are interconnected through the outer universal joint, the turning center of which is on the aforesaid king-pin axis. A pleated rubber boot prevents dirt and foreign matter from entering the outer universal joint and contains the grease for that joint. The inner end of the inner drive shaft is connected to the inner universal joint which is located on the stub of the differential output shaft.

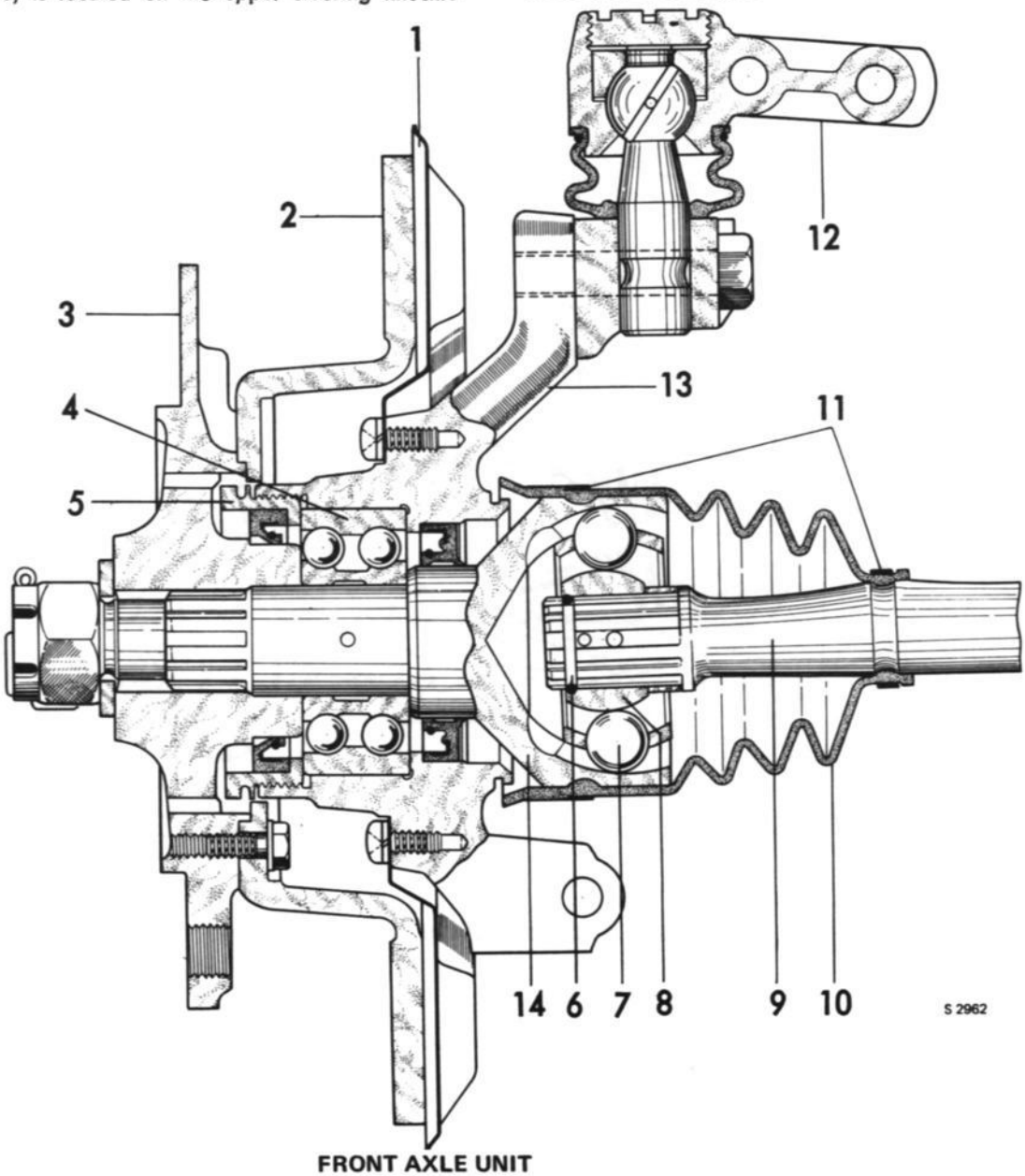

FRONT AXLE UNIT

1. Protective shield
2. Brake disc
3. Wheel hub
4. Ball bearing
5. Nut
6. Lock ring
7. Ball
8. Hub
9. Inner drive shaft
10. Rubber bellows
11. Clamp
12. Ball joint
13. Steering knuckle housing

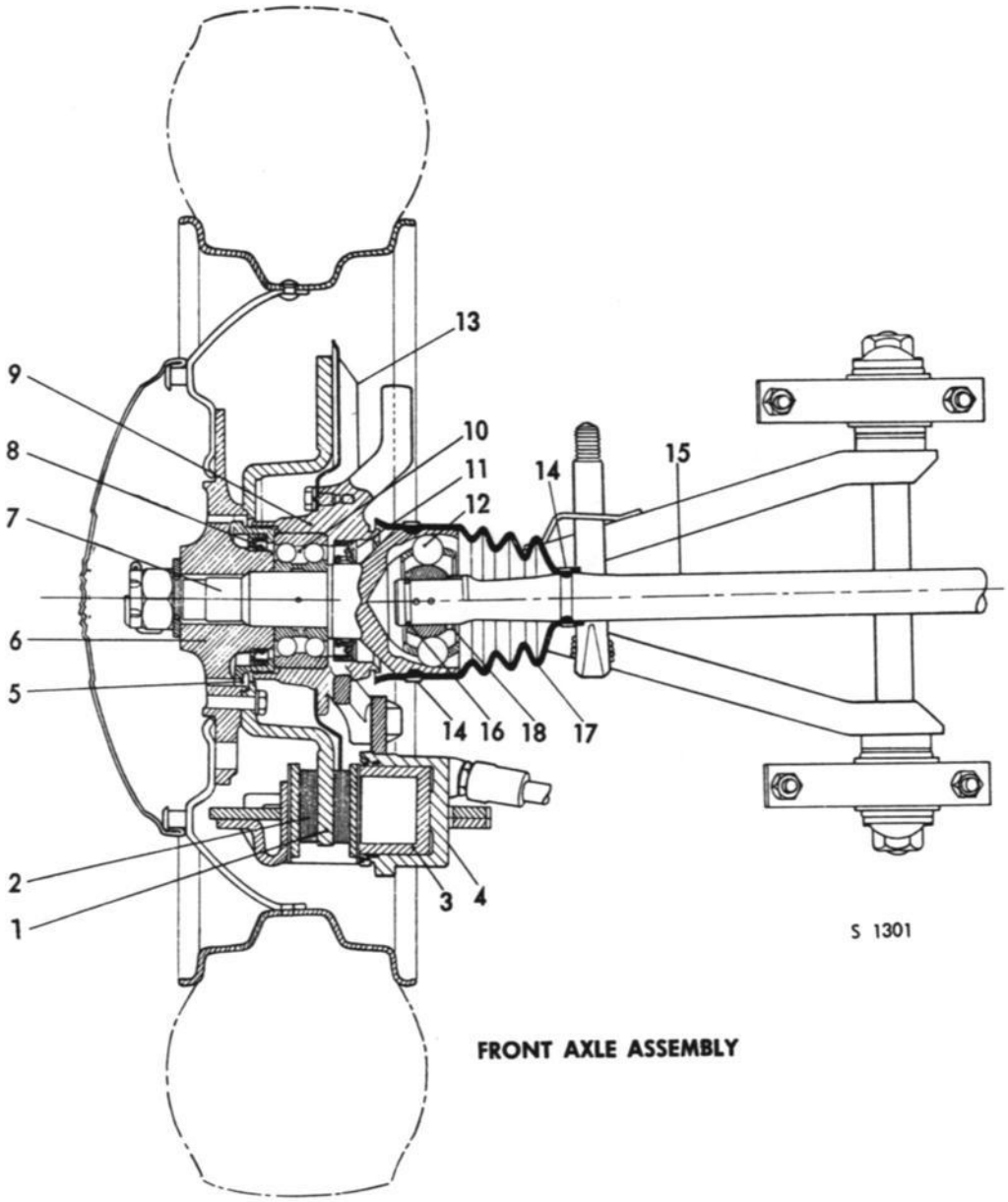

FRONT AXLE ASSEMBLY

1. Brake disc
2. Brake pad
3. Brake piston
4. Brake housing
5. Nut
6. Wheel hub
7. Outer drive shaft
8. Shaft seal
9. Steering knuckle housing
10. Ball bearing
11. Shaft seal
12. Ball
13. Backing plate
14. Clamp
15. Inner drive shaft
16. Circlip
17. Bellows
18. Spacer ring (Certain cars only)

Control arms

The front axle assembly, which comprises a separate unit on each side, is connected to the ball joints (see fig.) which form the ends of the control arms. There are two control arms on either side, each of them being carried in rubber bushings on two mounting brackets bolted to the body.

The upper control arms are equipped with seats for coil springs and rubber bumpers.
The two lower control arms are interconnected by means of a stabilizer bar.

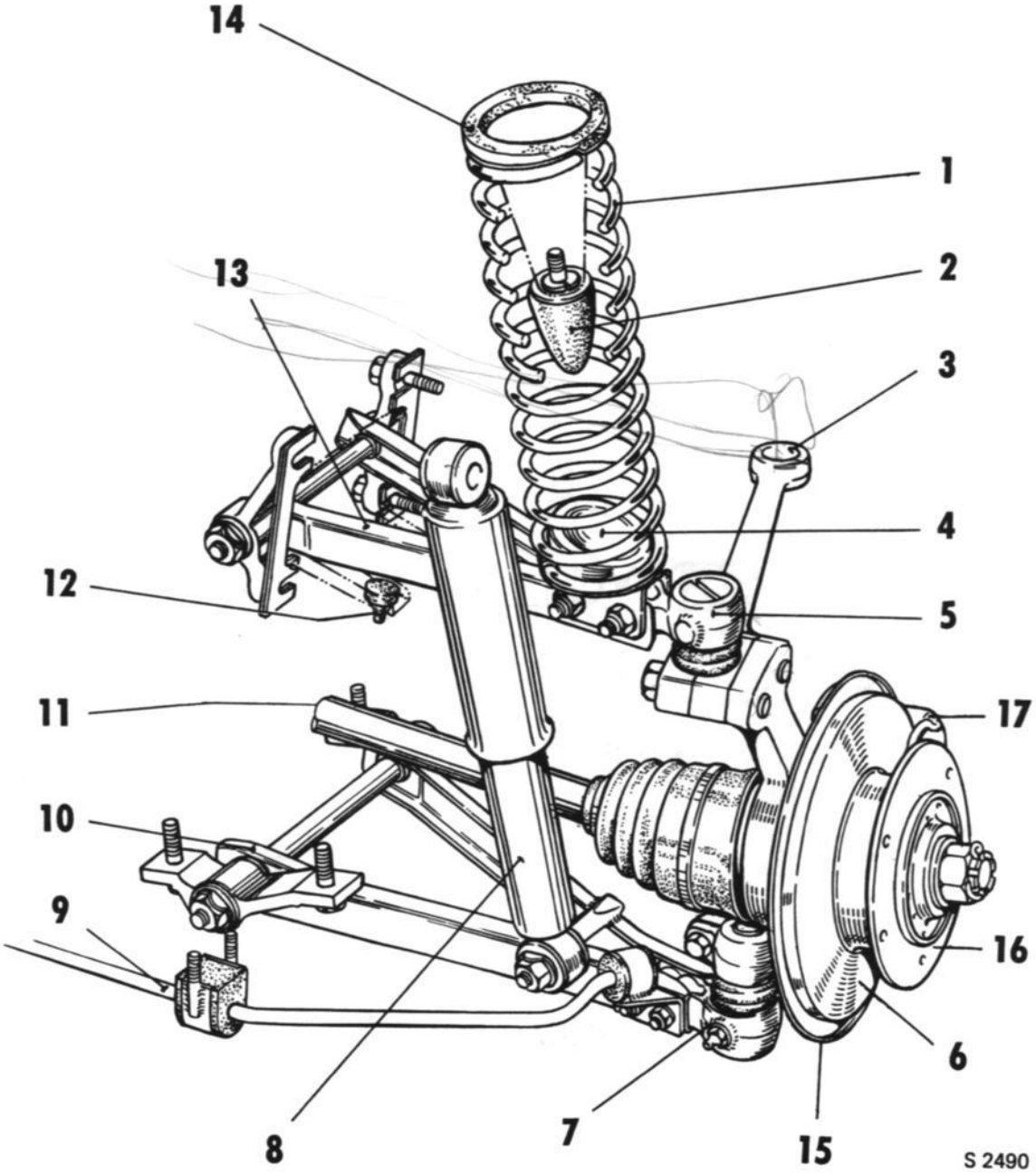

FRONT SUSPENSION, LEFT

1. Coil spring
2. Rubber bumper
3. Steering arm
4. Spring support
5. Upper ball joint
6. Brake disc
7. Lower ball joint
8. Shock absorber
9. Stabilizer bar
10. Lower control arm
11. Inner drive shaft
12. Rubber bumper
13. Upper control arm
14. Rubber spacer
15. Protective shield
16. Hub
17. Brake housing

Steering, and column shift gear

The steering gear is made in two versions, one for right-hand and one for lefthand steering. In principle, however, the two versions are identical. The steering gear is of rack-and-pinion type, consisting essentially of a spiral pinion meshed with skew teeth on a rack. The gear is enclosed in a light-alloy housing which also carries the toothed rack. Movement of the steering wheel, which is splined to the center stub of the steering column, is transmitted through the column to the pinion. The pinion imparts to the rack 6 — see fig. — a reciprocating movement, which actuates the two tie-rods 8 that are attached to the ends of the rack with ball joints. The tie-rods then transmit the movement to the steering arms 4 which are attached to the steering knuckles and connected to the tie-rods through the outer ball joints 3.

The SAAB V4 is equipped with a column shift gear. The gear-shift shaft is pivoted to the operating rod in the transmission case by means of a universal joint. This joint comprises a short shaft, connected through universal joints to the gear-shift shaft and to the operating rod — see fig.

The cars are equipped with a gear-lever lock in combination with the ignition lock. The gear-lever lock consists of a twist stop secured to the gear-shift shaft by two clamping screws and knurls. The twist stop has a hole into which the lock plunger slides when the gear-shift lever is locked.

The gear-shift mechanism can only be locked when the reverse gear is engaged.

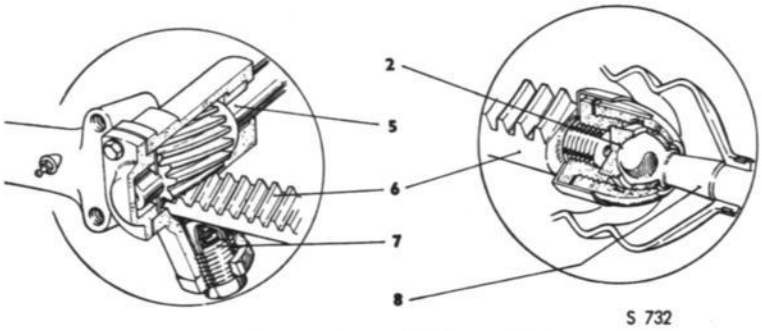

STEERING AND GEAR-SHIFT MECHANISM

1. Steering gear
2. Inner ball joint
3. Outer ball joint
4. Steering knuckle with steering arm
5. Steering column with pinion
6. Rack
7. Spring and plug
8. Tie-rod

WHEEL ALIGNMENT

General

It is of the utmost importance that the front wheels be correctly oligned, since incorrect steering geometry can cause:

1. Driving fatigue, due to impaired roadability.
2. Increased tire and repair costs due to abnormal wear of tires and steering mechanism.

If there is reason to suspect incorrect front-wheel alignment as the result of an accident or of driving into the ditch, for example, or if road behaviour otherwise is noticeably impaired, the car should immediately be taken to an authorized service shop for inspection and adjustment. Even if there is no direct reason to suspect faulty wheel alignment, the car should nevertheless be checked at regular intervals and adjusted whenever necessary.

The angles and dimensions directly affecting the front-wheel alignment, all of which are closely interrelated, are the following:

King-pin inclination
Caster
Camber
Toe-in and
Wheel turning angles

1. Check that the tire pressure is correct and that the front tires are not too unevenly worn.
2. Check the front wheel bearings, control arm bearings, ball joints and tie-rod ends, adjusting or replacing as necessary in order to eliminate errors that can be caused by worn parts.

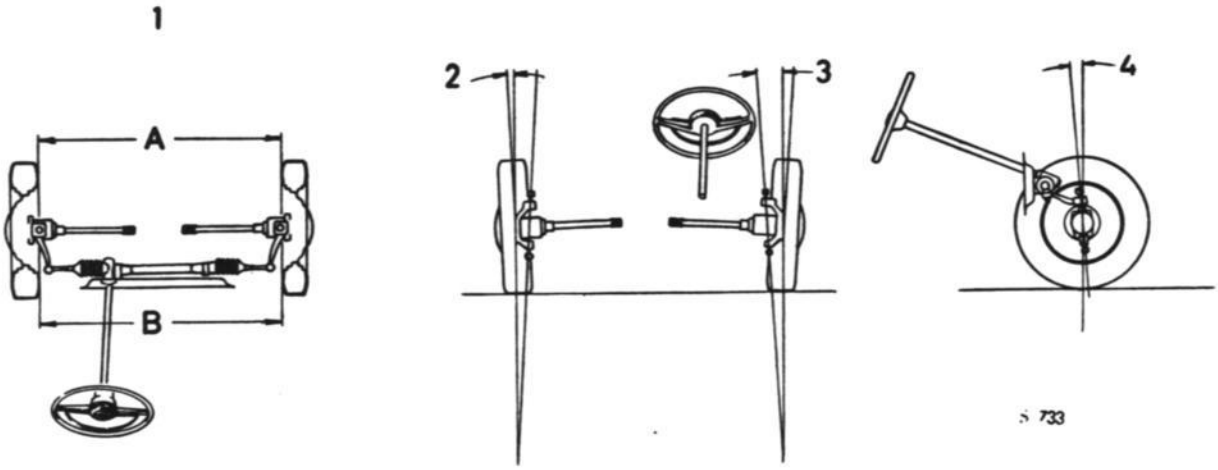

FRONT-WHEEL ALIGNMENT

1. Toe-in
2. Camber
3. King-pin inclination
4. Caster

3. Check the steering gear and adjust any faults — see Section 642.
4. Check the function of the shock absorbers and renew any defective shock absorbers and rubber bushings.
5. If the car has been involved in an accident, driven into the ditch, etc., any damage incurred must be repaired before the alignment check. Distorted steering arms must be rejected and new ones fitted, as restraightening is not permitted.
6. Immediately prior to the check, drive the car with normal suspension movement but without hard cornering in order to avoid deceptive misalignment. For the same reason, the car should also be rocked a few times.

During the alignment check, the car must be unladen and standing on a flat, horizontal floor, as otherwise measurements will not be reliable.

All adjustment with shims must be kept within reasonable limits. Deformation resulting from crash damage, etc., must be corrected by thorough realignment of the body. Distorted control arms must be rejected and new ones fitted.

For checking wheel alignment there are various standard tools, which are fitted either to the rim or directly on the stub axle. Tool handling is described in the instructions for each individual tool.

> NOTE
>
> When using axle-fitted tools on cars with a front-wheel drive, the wheels must stand on turn-tables or similar devices and should be locked with the brakes during the course of the check.

FRONT-WHEEL ALIGNMENT

Toe-in

Viewed from above, the wheels should have a certain relationship to each other, expressed as the difference between dimensions A and B, measured rim-to-rim at axle height. See fig.

The setting is called toe-in when dimension A is less than dimension B. When A is greater than B, the wheel setting is referred to as toe-out.

Toe-in or toe-out is expressed in inches or millimeters, being — as stated — the difference between the two measurements A and B. If the wheels are parallel, so that there is neither toe-in nor toe-out, the difference will be 0.

The correct setting is 0.08 in. (2 mm) toe-in, i.e. B—A = 0.08 in. (2 mm) ±0.04 in. (1 mm). Dimension A should be 0.04—0.12 in. (1—3 mm) less than dimension B.

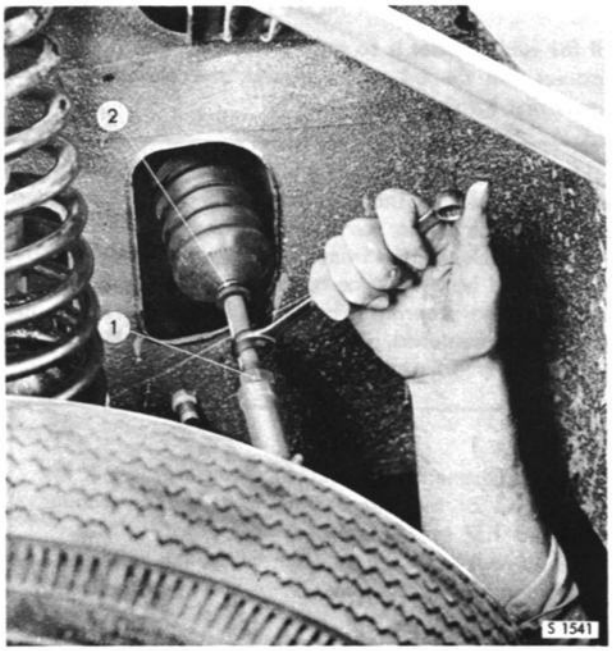

ADJUSTMENT OF TOE-IN

1. Locknut
2. Clamp ring

Checking and adjustment

1. Roll the car slowly straight ahead on a level floor and stop it without using the brakes. Do not move the car backwards again.
2. Check the measure A using the special measuring rule 784001, between the edges of the rims at axle height. Make a scribed mark at the measure points. Move the car forward until the scribed mark comes in axle height again. Check measure B.
   If adjustment is called for, alter the lenght of the tie-rods.
3. Back off the locknut on the outer end of the tie-rod.
4. Turn the tie-rod to right or left, and search until obtaining the right toe-in.
   In older steering gears, the tie-rod has a key grip. In later models there is no grip and then the tie-rod must be turned with a pair of pliers.

> NOTE
>
> If the rubber boot is so tightly clamped that it accompanies the tie-rod when turned, the clamping ring must first be slackened a little.

If the toe-in is correct, and when both wheels are pointing straight ahead, the two tie-rods should be of equal length, or else be so set that the wheels have the same amount of clearance from fenders and wheel houses when turned hard right or hard left. Check also that the spokes of the steering wheel are horizontal when the wheels are centered. Remember to tighten the tie-rod locknuts after adjustment.

> NOTE!
>
> After adjustment of toe-in, the measurement A for a tie-rod of the old design must on no account exceed 1.57 in. (40 mm).
> For tie-rods opposed to each other, the difference between the measurements "A" must not exceed 0.08 in. (2 mm).

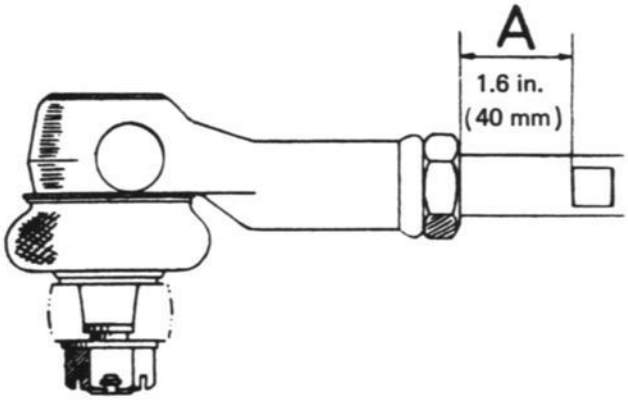

CHECKING THE LENGTH OF A TIE-ROD WITH KEY GRIP

CAMBER

Camber is understood to mean the deviation of the wheel from the vertical — see fig. If the wheel tilts outwards, camber is positive (+), and if it tilts inwards, camber is said to be negative (—).
The correct camber for a Saab car is 3/4° ± 1/4° positive.

Checking and adjustment

Camber, and thus king-pin inclination also, can be adjusted by inserting shims under the bearing brackets of the upper control arms. The desired result can thus be obtained by the addition or removal of shims.
Increasing the thickness of shims under both brackets by 0.1 in. (2.5 mm) reduces camber by approx. 1/2°.
If, on the other hand, an 0.1 in. (2.5 mm) shim is removed from under each bracket, camber will be increased by approx. 1/2°.
Shims of equal thickness must always be used under both brackets.

CASTER

Caster is the deviation of the king-pin axis from the vertical when viewed from the side, and is generally expressed in degrees. Caster varies greatly from car to car. In most cases, the king pin is inclined rearwards, as illustrated, and caster is then said to be positive (+). If the king pin is inclined forwards, caster is said to be negative (—). Finally, the king pin may be perfectly vertical, in which case caster is 0. In the Saab car, caster should be 2° ± 1/2° positive.

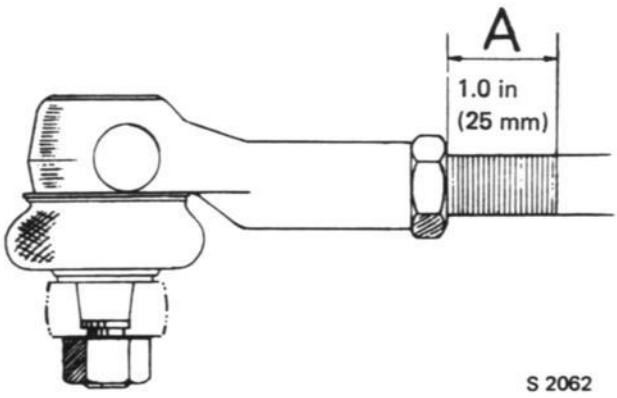

CHECKING THE LENGTH OF A TIE-ROD WITHOUT KEY GRIP

> NOTE!
>
> After adjustment of toe-in, the measurement A for a tie-rod of the new design must on no account exceed 1.0 in (25 mm).
> For tie-rods opposed to each other, the difference between the measurments "A" must not exceed 0.08 in. (2 mm).

Checking and adjustment

If caster adjustment is called for, this can be done by inserting shims under the bearing brackets of the upper control arms.
Transference of shims with a thickness of 0.02 in. (0.5 mm) from under the front bracket to under the rear bracket results in a 1/2° increase in caster.
Transference of shims with a thickness of 0.02 in. (0.5 mm) from under the rear bracket to under the front bracket results in a 1/2° decrease in caster.
The same thickness of shims as is removed from under one bracket must thus always be fitted under the other bracket.

KING-PIN INCLINATION

In point of fact, there is no king pin in the true sense of the term in the Saab car, and the term king-pin inclination is therefore instead applied to the inclination of the imaginary axis which passes through the centers of the two ball joints and meets the ground near the center line of the wheel. The correct inclination is 7°±1°.

Checking and adjustment

King-pin inclination is adjusted at the same time as camber and is changed by the same angle. It is not possible to adjust king-pin inclination alone, as this is determined by the steering knuckle. If the king-pin inclination is incorrect after adjustment of camber, the fault is to be found in the steering knuckle which should be renewed.

WHEEL TURNING ANGLES

If wheel alignment is correct, all four wheels will describe circles with a common center when the car takes a curve, and as the rear wheels are fixed this center must lie somewhere on their extended axis. As shown in the figure below, the inner front wheel must be turned more than the outer one when taking a curve, in order for both wheels to move around the same center.
Correct steering geometry depends essentially on the alignment of the steering arms, but the tie-rod alignment also has some bearing on it, particularly when suspension movement occurs — see fig.

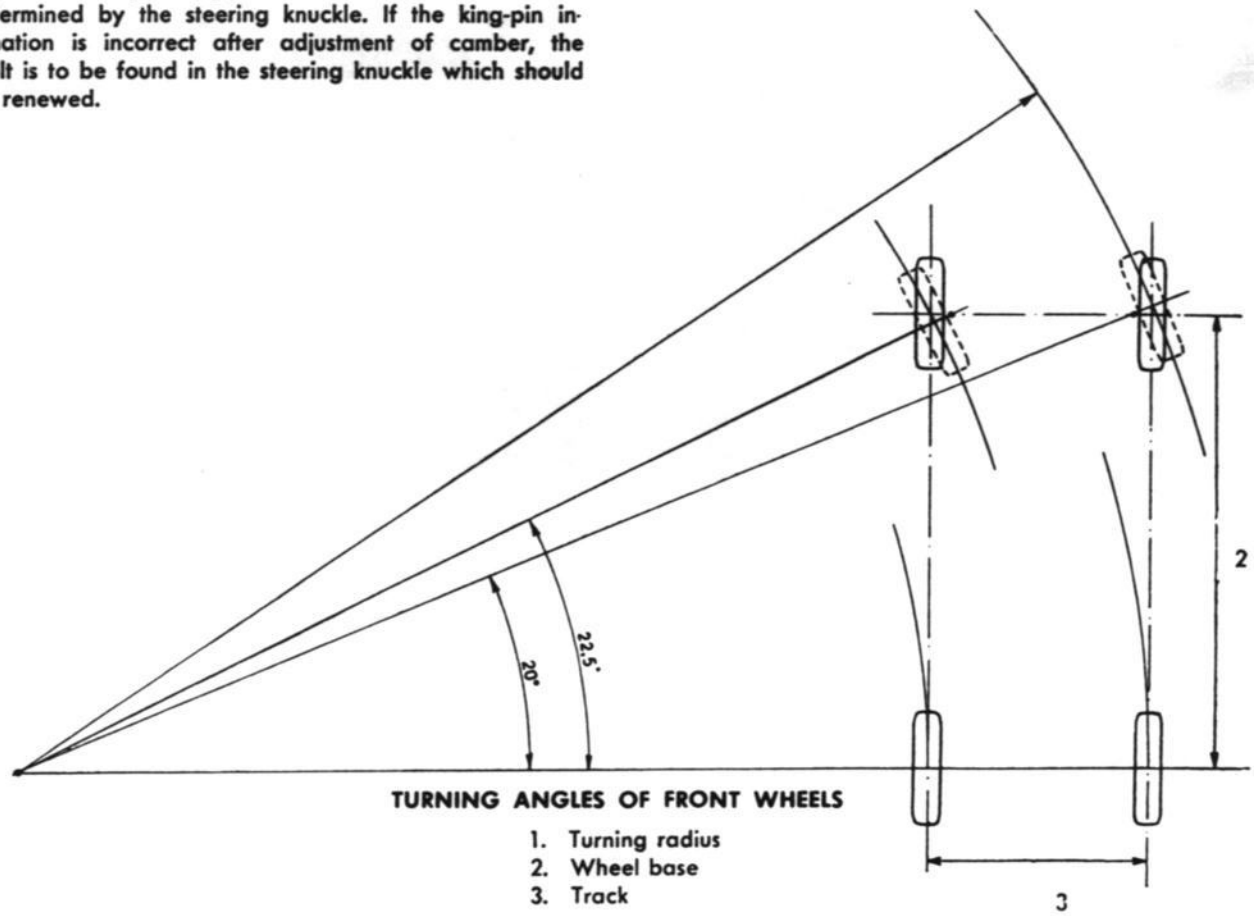

TURNING ANGLES OF FRONT WHEELS

1. Turning radius
2. Wheel base
3. Track

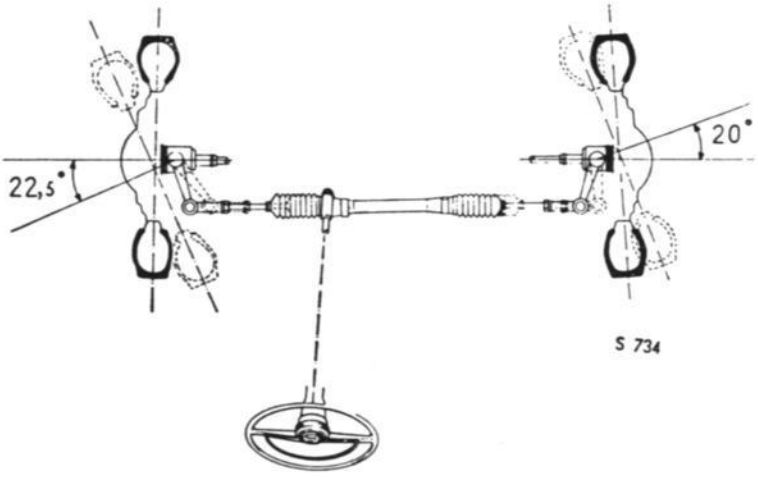

WHEEL TURNING ANGLES

Checking and adjustment

Before checking of turning angles is commenced, the toe-in must be correctly adjusted. To measure the turning angles, use is made of two standard-type turn-tables with arc graduations or optical measuring equipment — see fig. Position the turn-tables as close to the wheel turning center as possible.

Turn the steering wheel to, for instance, the left, until the graduated disc for the front wheel shows a reading of 20°. If the turning setting is correct, the other disc should give a reading of 22 1/2° ± 1 1/2°.

Measure in the corresponding manner when the steering wheel is turned in the opposite direction. If measurement reveals that the turning angles are incorrect, one or both steering arms is deformed. Defective steering arms must not be restraightened but must be changed instead.

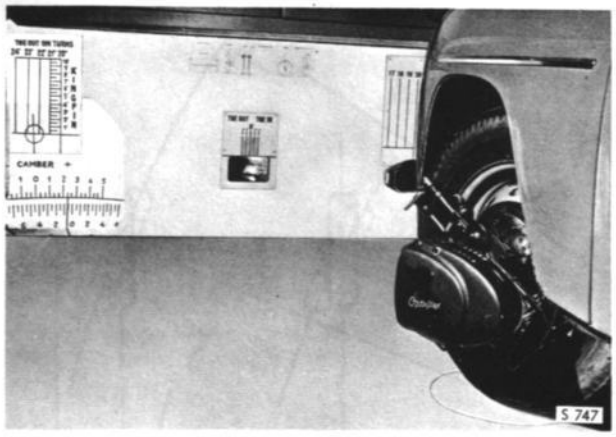

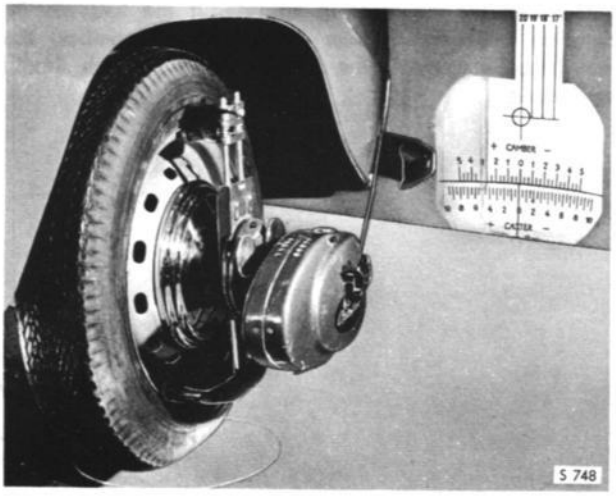

WHEEL ALIGNMENT WITH OPTICAL MEASURING EQUIPMENT

Inner wheel = 22.5°

Outer wheel = 20°

WHEEL ALIGNMENT TABLES

The use of the following tables facilitates adjustment of wheel alignment.

Camber – caster

The table is used as described in the following example.

1. In checking the front-wheel angles, the following figures, for example, are noted:
   camber = 1 1/4°
   caster = 2 3/4°
2. Look for these figures in the table, and you will find
   F + 3.5
   B + 1.5
   This means that:

   Shims with a thickness of 0.14 in. (3.5 mm) must be inserted under the front bracket.
   Shims with a thickness of 0.06 in. (1.5 mm) must be inserted under the rear bracket.
3. After adjustment of the shimming, the correct figures for both camber and caster will be obtained at the same time.
4. The framed figures in the table lie within the permissible tolerance limits and thus do not require adjustment.

Indicated camber, °	Indicated caster, °												
	½	¾	1	1¼	1½	1¾	2	2¼	2½	2¾	3	3¼	3½
2	F+4 B+8	F+4,5 B+7,5	F+5 B+7	F+5 B+7	F+5,5 B+6,5	F+6 B+6	F+6 B+6	F+6 B+6	F+6,5 B+5,5	F+7 B+5	F+7 B+5	F+7,5 B+4,5	F+8 B+4
1¾	F+2,5 B+6,5	F+3 B+6	F+3,5 B+5,5	F+3,5 B+5,5	F+4 B+5	F+4,5 B+4,5	F+4,5 B+4,5	F+4,5 B+4,5	F+5 B+4	F+5,5 B+3,5	F+5,5 B+3,5	F+6 B+3	F+6,5 B+2,5
1½	F+1,5 B+5,5	F+2 B+5	F+2,5 B+4,5	F+2,5 B+4,5	F+3 B+4	F+3,5 B+3,5	F+3,5 B+3,5	F+3,5 B+3,5	F+4 B+3	F+4,5 B+2,5	F+4,5 B+2,5	F+5 B+2	F+5,5 B+1,5
1¼	F+0,5 B+4,5	F+1 B+4	F+1,5 B+3,5	F+1,5 B+3,5	F+2 B+3	F+2,5 B+2,5	F+2,5 B+2,5	F+2,5 B+2,5	F+3 B+2	F+3,5 B+1,5	F+3,5 B+1,5	F+4 B+1	F+4,5 B+0,5
1	F—1 B+3	F—0,5 B+2,5	F±0 B+2	F±0 B+2	F+0,5 B+1,5	F+1 B+1	F+1 B+1	F+1 B+1	F+1,5 B+0,5	F+2 B±0	F+2 B±0	F+2,5 B—0,5	F+3 B—1
¾	F—2 B+2	F—1,5 B+1,5	F—1 B+1	F—1 B+1	F—0,5 B+0,5	F±0 B±0	Correct setting	F±0 B±0	F+0,5 B—0,5	F+1 B—1	F+1 B—1	F+1,5 B—1,5	F+2 B—2
½	F—3 B+1	F—2,5 B+0,5	F—2 B±0	F—2 B±0	F—1,5 B—0,5	F—1 B—1	F—1 B—1	F—1 B—1	F—0,5 B—1,5	F±0 B—2	F±0 B—2	F+0,5 B—2,5	F+1 B—3
¼	F—4,5 B—0,5	F—4 B—1	F—3,5 B—1,5	F—3,5 B—1,5	F—3 B—2	F—2,5 B—2,5	F—2,5 B—2,5	F—2,5 B—2,5	F—2 B—3	F—1,5 B—3,5	F—1,5 B—3,5	F—1 B—4	F—0,5 B—4,5
0	F—5,5 B—1,5	F—5 B—2	F—4,5 B—2,5	F—4,5 B—2,5	F—4 B—3	F—3,5 B—3,5	F—3,5 B—3,5	F—3,5 B—3,5	F—3 B—4	F—2,5 B—4,5	F—2,5 B—4,5	F—2 B—5	F—1,5 B—5,5
—¼	F—6,5 B—2,5	F—6 B—3	F—5,5 B—3,5	F—5,5 B—3,5	F—5 B—4	F—4,5 B—4,5	F—4,5 B—4,5	F—4,5 B—4,5	F—4 B—5	F—3,5 B—5,5	F—3,5 B—5,5	F—3 B—6	F—2,5 B—6,5
—½	F—8 B—4	F—7,5 B—4,5	F—7 B—5	F—7 B—5	F—6,5 B—5,5	F—6 B—6	F—6 B—6	F—6 B—6	F—5,5 B—6,5	F—5 B—7	F—5 B—7	F—4,5 B—7,5	F—4 B—8

In the event of the adjusting possibilities being too small to allow you to abtain the prescribed values, there are special bearings with better adjusting possibilities. See the Spare Parts List.

Toe-in (toe-out) at wheel rim

When adjusting toe-in (toe-out), remember that:

1.a. Measurement A must not exceed 1.57 in. (40 mm), see fig. 1 A.

b. Measurement A must not exceed 1.0 in (25 mm). See fig. 1 B.

2. The difference between Measurements A for left and right sides must not exceed 0.08 in. (2 mm).

The framed values are within the permissible tolerances, and thus do not need to be adjusted.

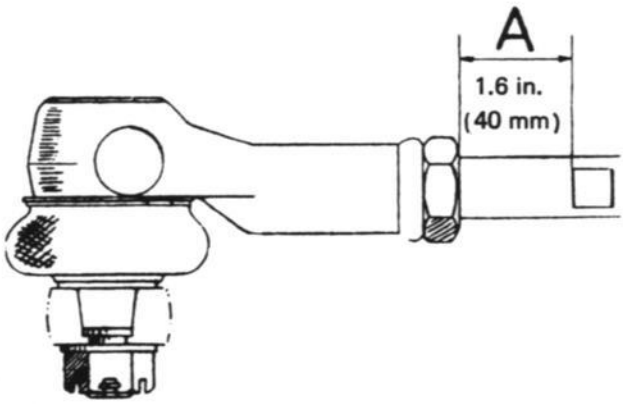

1A. CHECKING THE LENGTH OF A TIE-ROD WITH KEY GRIP

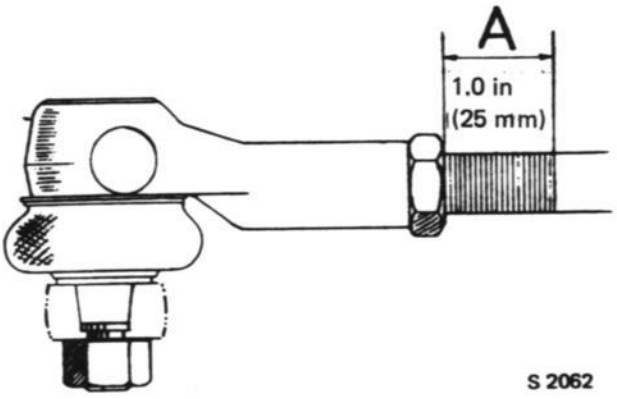

1B. CHECKING THE LENGTH OF A TIE-ROD WITHOUT KEY GRIP

	Reading, value of toe-in	Screw tie-rod in or out, the following 1/4 turns
Toe-in mm and in.	6 0.24 in.	8 out
	5 0.19 in.	7 out
	4 0.16 in.	6 out
	3 0.12 in.	5 out
	2 0.08 in.	4 out
	1 0.04 in.	3 out
	0	2 out
Toe-out in mm and in.	1 0.04 in.	1 out
	2 0.08 in.	Correct value
	3 0.12 in.	1 in
	4 0.16 in.	2 in
	5 0.19 in.	3 in
	6 0.24 in.	4 in
	7 0.28 in.	5 in
	8 0.31 in.	6 in
	9 0.35 in.	7 in
	10 0.39 in.	8 in

REAR-WHEEL ALIGNMENT

Checking

If the rear axle has been subjected to abnormal stresses, for instance in connection with a collision or other accident, it must be carefully checked for signs of fracture or deformation.

Normally, rear-wheel alignment does not require adjustment. If, however, the rear axle has been subjected to such abnormal stresses that faulty alignment of the rear wheels is suspected, the wheel angles should be checked. If the wheels are correctly aligned, the angles should be within the following limits:

Camber	0° ±1°
Toe-in (toe-out) must not exceed:	
per wheel	0° ±3/4°
both wheels together	0° ±1°
both wheels together measured rim-to-rim	0±0.28 in. (7 mm)
Max. difference in wheelbase, left and right (front wheels pointing straight ahead):	0.6 in. (15 mm)

On condition that the wheel angles are within the values stipulated above, the difference in wheelbase between the left and right sides may amount to a maximum of 0.6 in. (15 mm).

NOTE

Special wheel-angle measuring equipment is needed to establish faults in toe-in (toe-out).

NOTE

If the difference in wheelbase exceeds 0.2 in. (5 mm), the wheel alignment must be checked.
Wheel alignment can be incorrect without this affecting the wheelbase.

STEERING KNUCKLE AND BALL JOINTS

Raplacement of front-wheel bearings

After considerable mileage, especially if lubrication has not been satisfactory, the wheel bearings may become worn and play will develop. Since this has a detrimental effect on the steering characteristics, the bearings must be renewed. Bearing play is measured at the rim. If any existing play, measured at the rim, exceeds 0.08 in. (2 mm), the bearing must be changed. Note that an arbor press will be needed for removal and installation of wheel bearings. Do not subject the bearing to blows under any circumstances, as such treatment could easily damage them. Always use genuine replacement bearings, as these have tolerances specially adapted for the axle and steering knuckle.

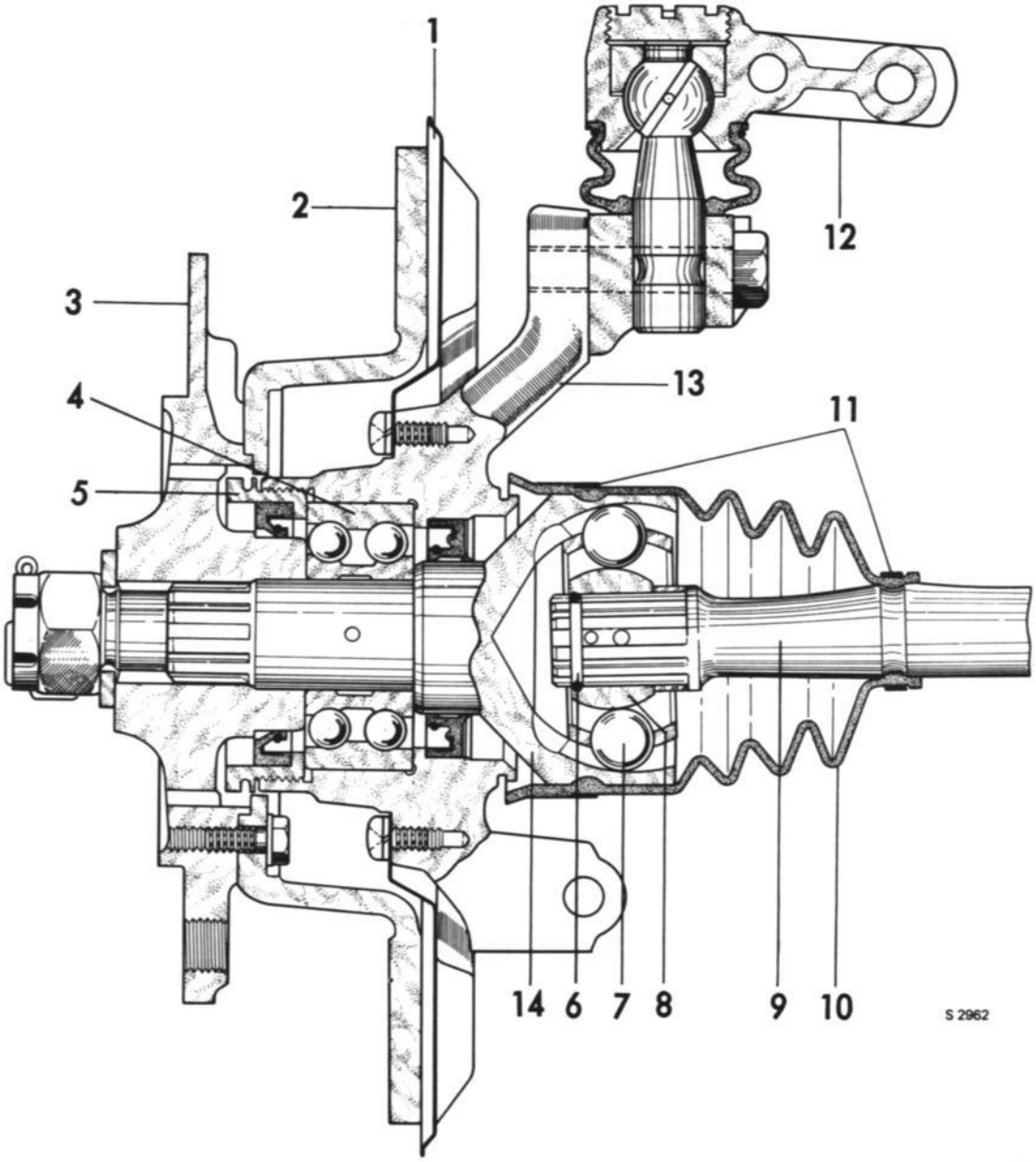

FRONT AXLE UNIT

1. Protective shield
2. Brake disc
3. Wheel hub
4. Ball bearing
5. Nut
6. Lock ring
7. Ball
8. Hub
9. Inner drive shaft
10. Rubber bellows
11. Clamp
12. Ball joint
13. Steering knuckle housing

Removal

1. Jack up the front part of the car and remove the wheel
   Remove the brake housing and hang it up near the wheel house in order to prevent damage to the brake hose. Then remove the hub with the brake disc.
2. Remove the steering arm and upper ball joint from the steering knuckle.
3. Back off the clamping screw which holds the lower ball joint to the steering knuckle.
4. Remove the large clamp for the rubber bellows on the inner universal joint and open up the joint. Fit the cover, No. 731762, in the rubber bellows to keep the needle bearings in and dirt out. Fit protective cover 783846 on the inner driver.
5. Pull the drive shaft out through the wheel house and remove the front-axle assembly. Wash this unit thoroughly.
6. Remove the nut and shaft seal from the steering knuckle. Use the pegged key, No. 784020. First prise up the nut retainer with an arbor or other suitable tool.
7. Remove the outer drive shaft by applying pressure to its outer end. The outer drive shaft will be accompanied by the universal joint, rubber bellows and middle drive shaft. See fig.
8. Press the bearing out of the steering knuckle from the inside.
9. Remove the two sealing rings their seats in the steering knuckle and nut if they need to be changed.

REMOVAL OF INNER DRIVE SHAFT

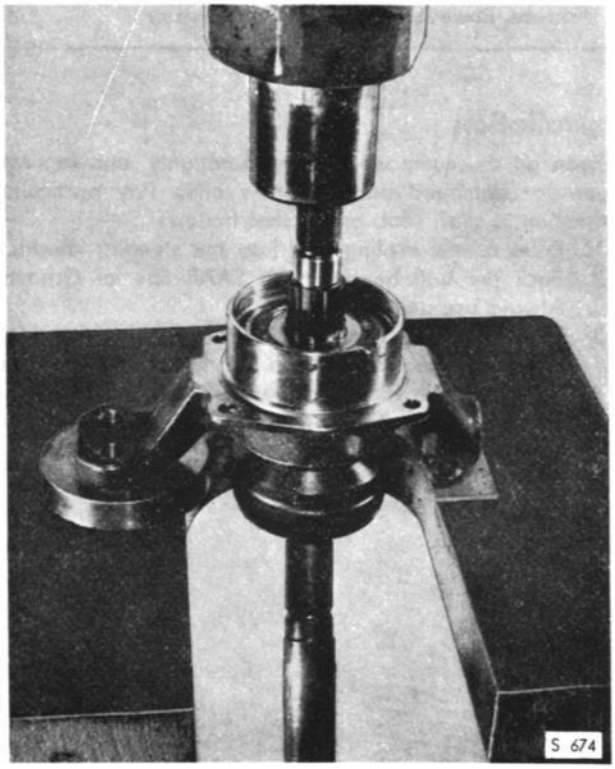

PRESSING OUT THE OUTER DRIVE SHAFT

10. Secure the middle drive shaft in a vise and strike the hub off the shaft, using arbor No. 784202. See fig.

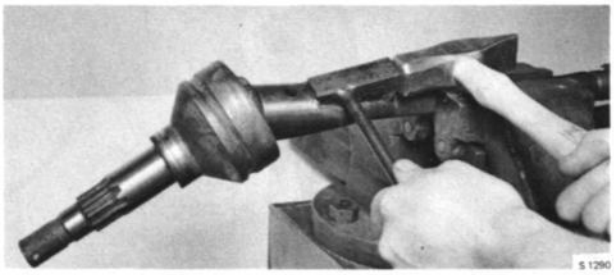

REMOVAL OF HUB WITH ARBOR 784202

NOTE

The hub, ball holder and balls can be removed from the dome if the hub is turned through 90° in a certain position. These items should only be removed, however, if absolutely necessary.

Installation

Clean all the component parts thoroughly, and replace worn or damaged parts by new ones. Pay particular attention to shaft seals and rubber bellows.

1. Press a new sealing ring into the steering knuckle.
2. Pack the ball bearing with SAAB Special Grease. Always use genuine bearings.
3. Drive the ball bearing into the steering knuckle, using tool No. 784075, with the number stamped on the outer race facing outwards. See fig.
4. Screw on the nut with a new shaft seal and secure the nut.

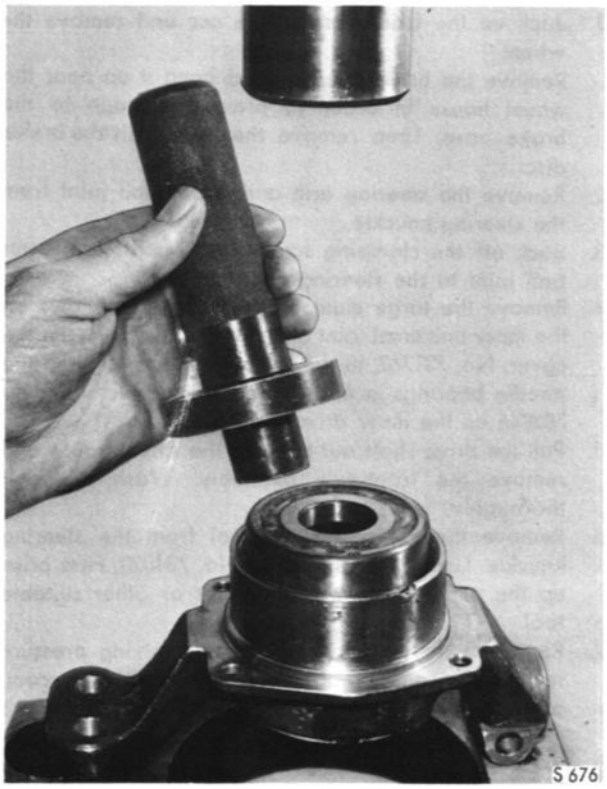

PRESSING IN THE BALL BEARING, TOOL 784075

5. Fill the space between the lips of the sealing ring with chassis grease and drive the shaft in until it butts against the bearing.
6. Lubricate the universal joint with SAAB Special Grease. The correct amount of grease will be obtained if you fill the dome, with hub and balls inserted, with grease. This operation must be carried out in conditions of scrupulous cleanliness in order to prevent dirt and foreign matter from entering the universal joints and bearings.
7. Ease on the rubber bellows and clamps to the inner drive shaft.
8. Fit a new elastic washer on the inner drive shaft and compress it with the aid of tool No. 784161. See fig.

NOTE

Place the ends of the circlip under one of the plier jaws. The ends must not be free when the pliers are closed.

PLACING OF LOCK RING IN TOOL 784161

9. Insert the shaft in the hub and tap the end of the shaft lightly so that the circlip engages. Detach the pliers and slide the shaft fully into the hub.

ASSEMBLY OF MIDDLE DRIVE SHAFT IN THE HUB

10. Fit the two clamps on the outer rubber bellows and the clamp for the inner bellows at the shaft.
11. If the needle bearings have been removed, lubricate them with SAAB Special Grease and mount them on their journals. Fit the cover, No. 731762, to protect the needle bearings, and pass the drive shaft in through the wheel house. Make sure that the inner driver is clean and that it has been packed with SAAB Special Grease — see "Inner universal joint". Then reassemble the inner universal joint and tighten the clamp round the rubber bellows.
12. Refit the steering knuckle to the steering arm and lower ball joint. Remember to provide lock plates at the screws, and to secure these.
13. Refit the hub and the brake disc, followed by the brake housing and friction pads. Secure the bolts with lock plates.
14. Refit the wheel and lower the car to the floor. Tighten the axle nut to a torque of 130 ft-lb (18 kpm), and secure.
15. Refit the hub cap.

WARNING

The friction pads on cars with disc brakes must be returned to their position near the brake disc. To ensure correct positioning, pump repeatedly with the brake pedal. Neglect in this respect will result in brake failure.

BALL JOINTS

Replacement of ball joints

1. Jack up the car and remove the wheel. Wash the ball joint and adjacent parts carefully.
2. If the upper ball joints is to be changed, compress the spring with the aid of the spring vise, tool No. 784082.

> WARNING
> Unconditionally, the spring clamp must be fitted with the retainers fitted in the way shown by the fig.

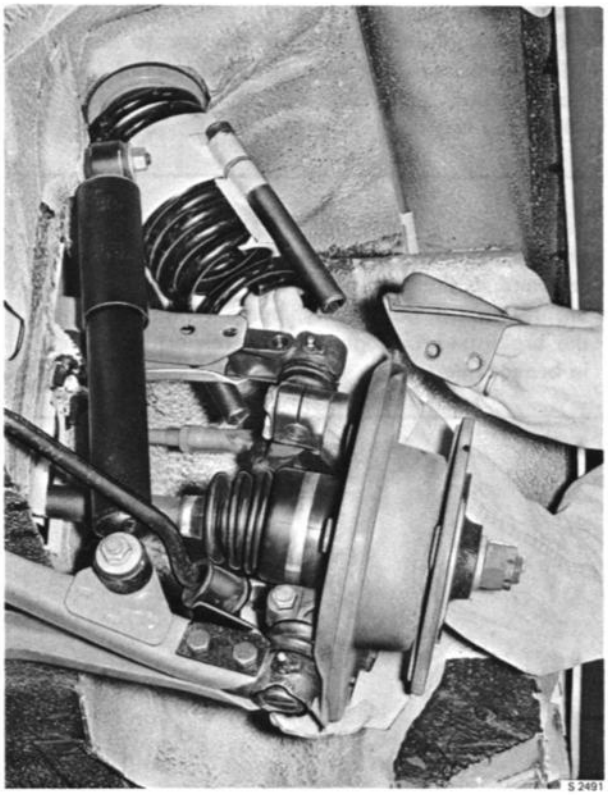

DISASSEMBLY OF FRONT COIL SPRING, USING TOOL No. 784082

3. Remove the ball joint from the steering knuckle. The upper ball joint has two screws and the lower ball joint one.
4. Remove the ball joint from the control arm.
5. Fit a new ball joint and attach the pivot pin to the steering knuckle. Secure the screws.
6. Fit the ball joint to the control arm and release the spring vise.
7. Refit the wheel and lower the car to the floor.

> NOTE
> Ball joints must never be dismantled but should be renewed as complete units.

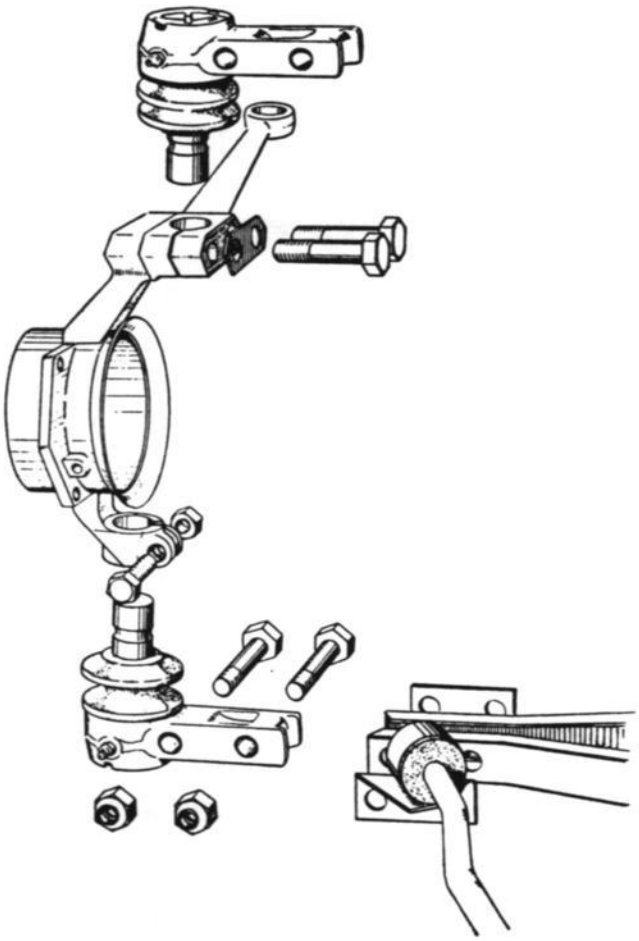

ATTACHMENT OF STEERING KNUCKLE AND BALL JOINT

Replacement of ball joint dust excluders

To protect the ball joints from wear by foreign matter, they are fitted with rubber dust excluders (boots). Damaged boots must be replaced by new ones.

Tightening of control arm ball joints

If play develops in the control arm ball joints, adjustment is called for, as such play adversely influences the steering characteristics of the car and gives rise to unwanted noise.

1. Jack up the car and remove the wheel. Wash the ball joint and adjacent parts carefully.
2. Detach the ball joint from the steering knuckle. The upper ball joint has two screws and the lower ball joint one. Clean the ball joint and remove the rubber dust excluder.
3. Release the securing flange on the tightening cap, using an arbor.
4. Turn the cap with a suitable implement until the ball joint begins to feel slightly stiff.

> NOTE
>
> Do not tighten the ball joint excessively: it should be possible to move it all the way in all directions by hand.

5. Secure the tightening cap by bending down the flange into the grooves on both sides with an arbor. Take great pains to secure effectively, making new retaining grooves if the old ones cannot be used. Lubricate the ball joint copiously.
6. Fit a new rubber dust excluder and connect the ball joint to the steering knuckle. Secure the screws.
7. Refit the wheel and lower the car to the floor.

CONTROL ARMS

Removal of control arms and steering knuckle

1. Jack up the front part of the car and remove the front wheels.
2. Remove the shock absorbers.
3. Detach the tie-rod ends from the steering arms, using tool No. 899540
4. Remove the brake housing and hang it up in such a way that the brake hose not be damaged.
5. Detach the steering arm and upper ball joint from the steering knuckle.
6. Back off the clamping screw which holds the lower ball joint to the steering knuckle.

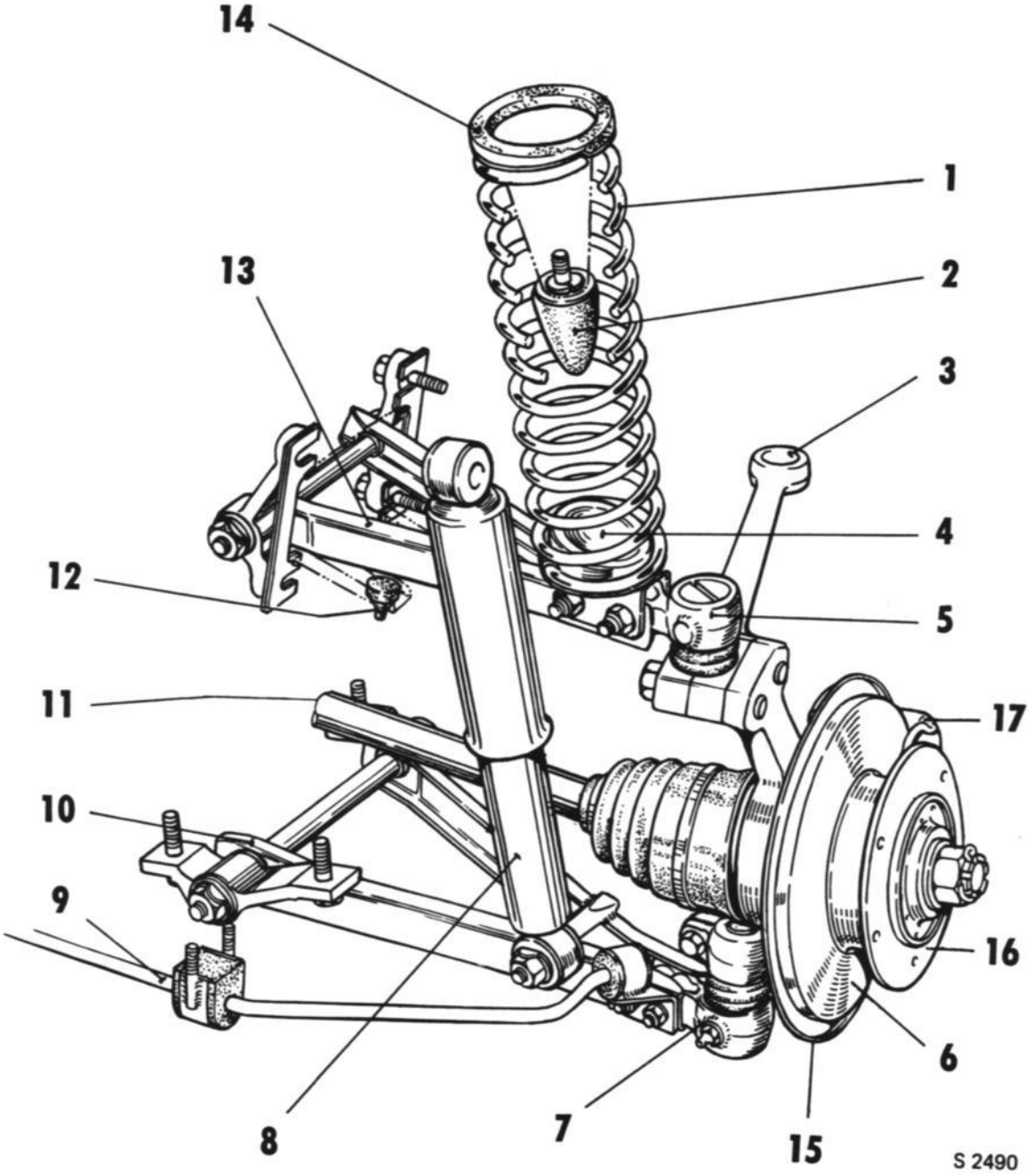

FRONT SUSPENSION, LEFT

1. Coil spring
2. Rubber bumper
3. Steering arm
4. Spring support
5. Upper ball joint
6. Brake drum
7. Lower ball joint
8. Shock absorber
9. Stabilizer bar
10. Lower control arm
11. Inner drive shaft
12. Rubber bumper
13. Upper control arm
14. Rubber spacer
15. Protective shield
16. Hub
17. Brake housing

7. Open up the inner universal joint and remove the entire front axle assembly. Clean thoroughly.
8. Remove the coil springs as described in Section 631.
9. Remove the upper and lower control arms.
10. Remove the stabilizer bar by undoing its brackets on the body. The nuts can be reached from inside the engine compartment. Detach both body brackets and end brackets from the stabilizer bar, thus enabling it to be pulled out to the right.
11. Remove the lower rebound rubber bumpers.
12. If necessary, remove the steering gear, see section 642.

> NOTE
>
> In conjunction with overhauls of the front suspension, it is also appropriate to disassemble and adjust the steering gear, see section 642.

Installation of control arms and steering knuckle

Clean all parts thoroughly. After careful examination, reject all worn or damaged parts and fit new ones in place of them, unless they can be adjusted in accordance with the description. The steering gear should be adjusted as described in Section 642.

1. Pass the stabilizer bar in from the right and bolt it to the body.
2. Reinstall the steering gear, if this unit has been removed. See Section 642.
3. Refit the upper and lower control arms.
4. Refit the coil springs, see Section 631.
5. Refit the front-axle assemblies.
   If removed, lubricate the needle bearings with SAAB Special chassis grease, then fit them to the T-shaped end of the axle. Fit the cover 731762 to protect the needle bearings, and insert the drive shaft through the wheel housing. See to it that the inner driver is clean and has fresh SAAB Special chassis grease, see "Inner universal joint" section 475. Then fit the inner universal joint, and tighten the clip round the rubber bellows. Do not forget to secure, with tab washers, the upper clamp bolts of the ball joints.
6. Refit the shock absorbers.
7. Refit the wheels and the brake housings and lower the car to the floor. Return the brake pads to their position near the brake disc.
8. Take the car out for a test run. Check the wheel alignment and adjust if necessary. See Section 601.

Replacement of upper control arms

Removal

1. Jack up the front part of the car and remove the wheel.
2. Remove the shock absorber
3. Compress the coil spring, using the spring vise, tool No. 784082. See section 631.
4. Back off and remove the two screws holding the ball joint and lower spring seat to the upper control arm. See fig.
5. Back off the bolts holding the control arm bearing brackets.
6. Remove the compressed coil spring.
7. Remove the control arm and the bearing brackets. Collect the shims from under the brackets.
8. Back off and remove both nuts from the bearing, thus enabling the brackets and bushings to be taken off the control arm. See fig.
9. As alternatives, there are either two split bushings or one whole bushing in the bracket. To remove the whole bushing, use tool No. 784133 for the upper one and 784134 for the lower one.

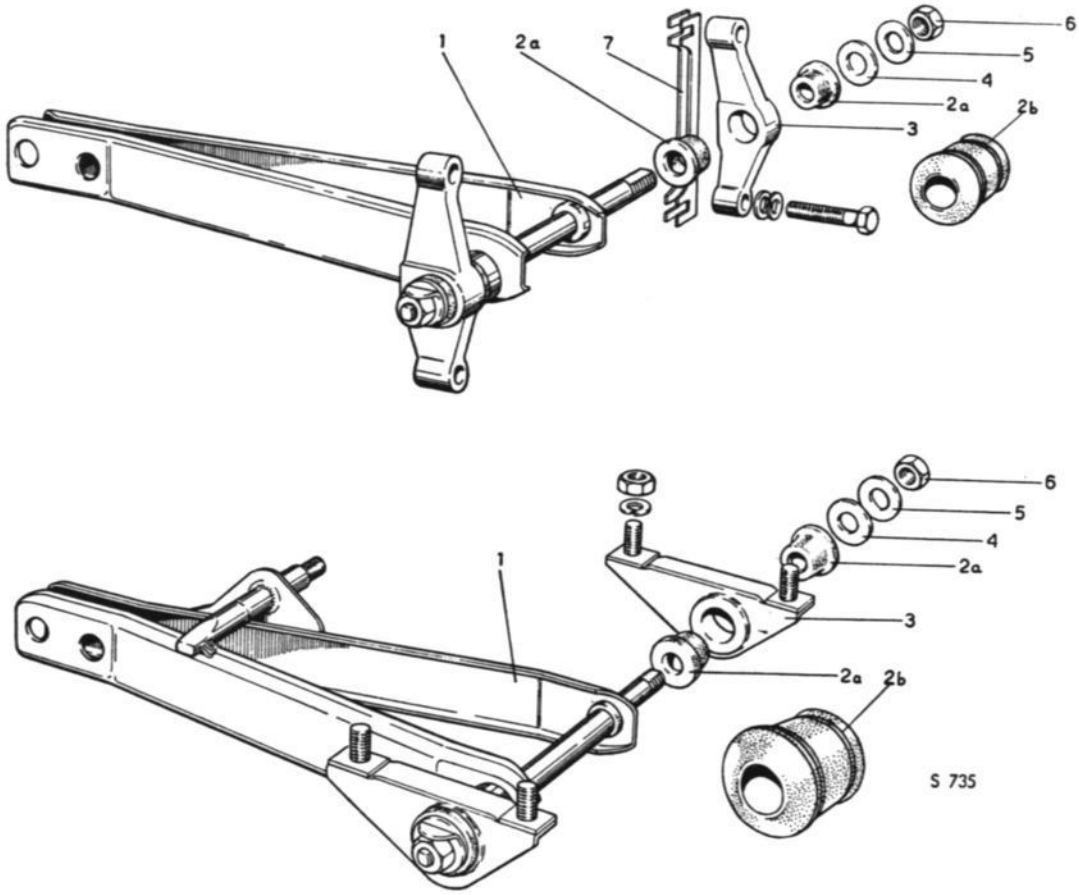

UPPER AND LOWER CONTROL ARMS, FRONT SUSPENSION

1. Control arm
2a. Rubber bushing, split
2b. Rubber bushing, whole
3. Bracket
4. Washer
5. Lock washer
6. Nut
7. Shim

Reassembly

All components must be thoroughly cleaned before refitting and new parts should be provided in place of any worn or damaged ones.

1. Refit the rubber bushings in the brackets. Note that there are two types of bushings, viz. split ones and whole ones. If the whole type is used, drive it into the bracket with the aid of tool No. 784133 (upper bushing) or 784134 (lower bushing). Lubricate the bushing with soft soap and water before pressing in.
2. Refit the bearings, complete with bushings, to the control arm. When the two nuts have been tightened and secured, the angle between the control arm and the brackets should be 70° ± 2°. See fig.

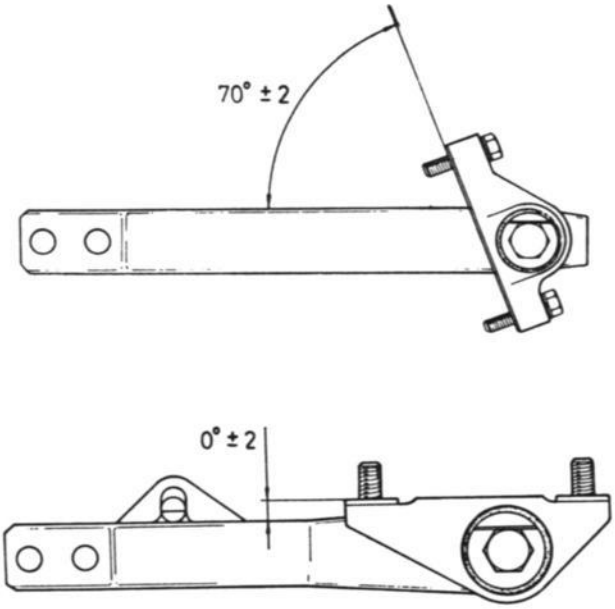

ANGLE BETWEEN THE UPPER AND LOWER CONTROL ARMS, RESPECTIVELY, AND THEIR BEARING BRACKETS

> NOTE
>
> In no circumstances may oil or grease be used to facilitate insertion of rubber bushings. If lubrication is needed, use soft soap and water.

3. Put the control arm in position, but do not insert the bracket bolts.
4. Check that the rubber and metal washers in the upper spring seat are in place, and that the rubber bumpers have been fitted under the control arm.
5. Insert the compressed coil spring in its position and refit the ball joint and lower spring seat to the arm.
6. Tighten the bolts of the control arm bearing brackets. Remember to insert the shims.
7. Slacken the screws of the spring vise successively, until the tool can be removed.
8. Refit the shock absorber.
9. Refit the wheel and lower the car to the floor.
10. Take the car out for a test run and then check the wheel alignment, adjusting if necessary as described in Section 601.

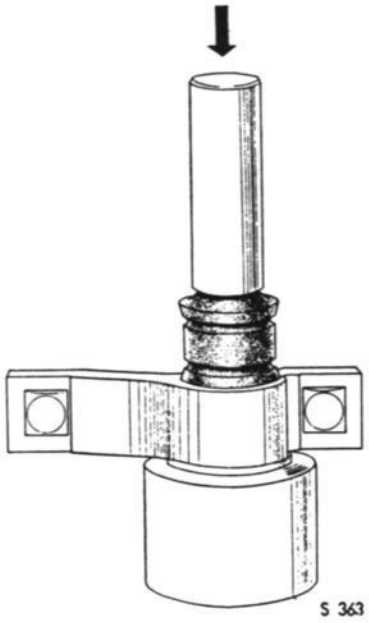

DRIVING IN A WHOLE RUBBER BUSHING

Tool 784133 for upper bushing
Tool 784134 for lower bushing

Replacement of lower control arm

Removal

1. Jack up the car and take off the wheel.
2. Detach the lower shock absorber bracket.
3. Back off and remove the two bolts holding the ball joint to the control arm, thus releasing also the stabilizer bar bearing. See fig.
4. Back off from inside the engine compartment the nuts holding the bearing brackets to the floor pan, whereupon the control arm and brackets can be removed.
5. Back off and remove the two nuts from the control arm bearing and remove the brackets and bushings. See fig.

Reassembly

All components must be thoroughly cleaned before refitting and new parts should be provided in place of any worn or demaged ones.

1. Refit the rubber bushings and brackets to the control arm. When the two nuts have been tightened and secured, the angle between the control arm and the contact surface of the brackets should be 0° ± 2°. See fig.
2. Refit the control arm by bolting the bearing brackets to the body.
3. Attach the ball joint and stabilizer bar bearing to the control arm. Remember to insert stiffeners on the rear of the control arm.
4. Refit the lower shock absorber bracket.
5. Refit the wheel and lower the car to the floor.
6. Take the car out for a test run.
7. Check the wheel alignment, adjusting if necessary as described in Section 601.

NOTE

In no circumstances may oil or grease be used to facilitate insertion of rubber bushings. If lubrication is needed, use soft soap and water.

Checking control arms

If the control arms have been subjected to severe stresses on account of a collision or other accident, they should be carefully examined for signs of fracture or deformation. Distorted arms must be rejected and new ones fitted in their place.

STEERING WHEEL AND COLUMN SHIFT GEAR

General

The SAAB V4 are made for both righthand and lefthand steering. The steering mechanism is the same for all models.

As from the 1969 model, steering wheel shaft of the safety type has been introduced. This shaft is in two parts, which are shut up into each other when exposed to heavy pressure.

NOTE! If the safety steering wheel shaft has been deformed, a new one must be fitted.

Steering wheel: horn button assembly up to and incl. model 1967

Removal

1. Disconnect the horn wire at the connector under the instrument panel.
2. Remove the central button by prying gently with a knife or other suitable implement under the edge of the button, see fig. page 641–2.
3. Disconnect the horn wire from the contact plate.
4. Back off the nut and remove the retaining washer.
5. Remove the horn ring.
6. Lift away the steering wheel.
7. The return yoke for the directional signal switch can now be removed.

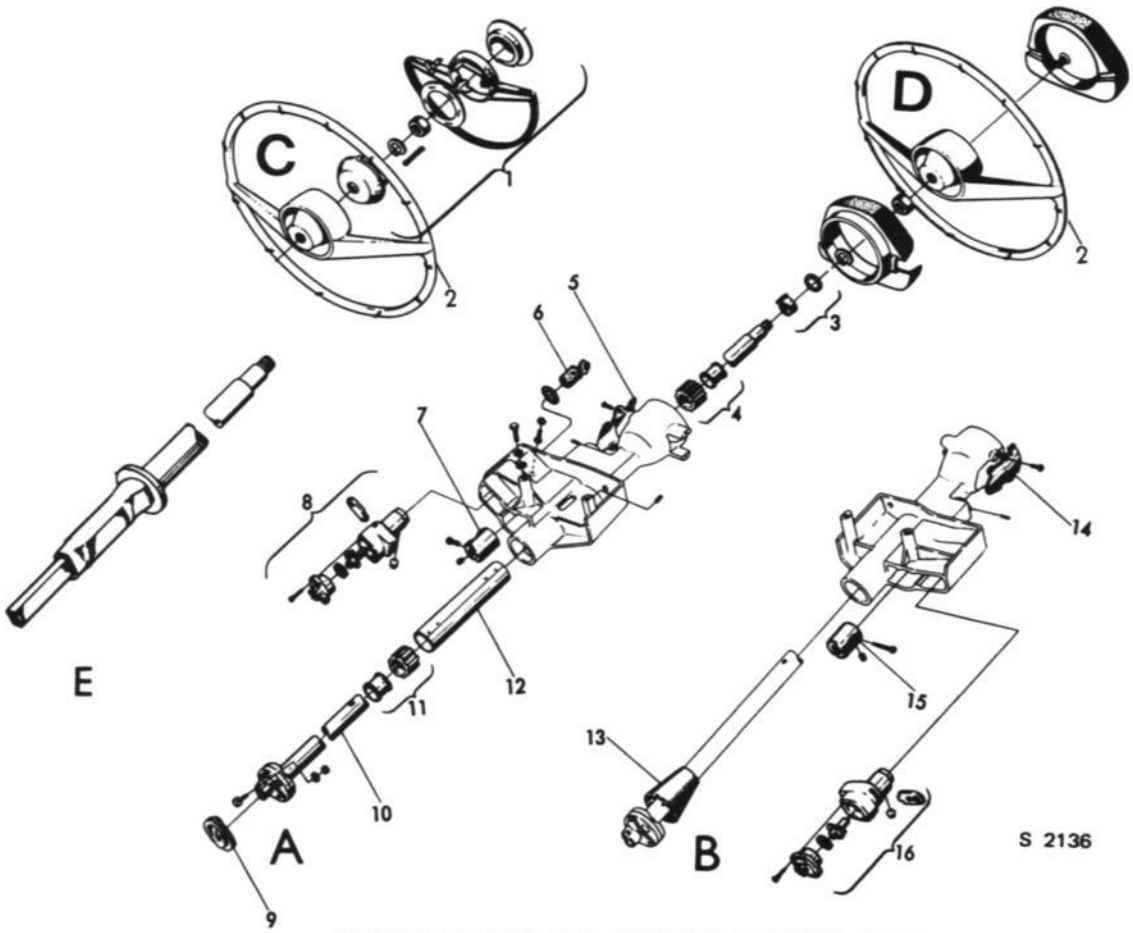

STEERING WHEEL AND STEERING COLUMN STAND

A. L. H. D. CAR

1. Horn button assy
2. Steering wheel
3. Washer and return yoke
4. Bushings
5. Cover
6. Lock cylinder
7. Twist stop
8. Gear lever lock
9. Rubber grommet
10. Steering wheel shaft with universal joint
11. Bushings
12. Cardboard sleeve

B. R. H. D. CAR

13. Plastic cone
14. Cover
15. Twist stop
16. Gear lever lock

C. STEERING WHEEL AND HORN ASSEMBLY UP TO AND INCL. MODEL 1967

D. STEERING WHEEL WITH SAFETY PAD FROM MODEL 1968

E. STEERING WHEEL SHAFT AS FROM MODEL 1969

Reassembly

1. Refit the return yoke if this item has been removed.
2. Check the clearance between the return yoke and the projection on the directional indicator switch. The correct clearance is 0.008—0.024 in. (0.2—0.6 mm) with the switch at neutral. Adjust by inserting shims between the switch and the column stand.

> NOTE
>
> Fit the return yoke so that its center axis coincides with the center axis of the switch housing, when the wheels are straight ahead.

3. Fit the steering wheel on the column. Make sure that the front wheels are aligned straight ahead and push the steering wheel on the column center pin so that the spokes of the wheel are aligned horizontally.
4. Refit the horn ring and retaining washer. Tighten the nut.
5. Reconnect the horn wire to the contact plate.
6. Fit the center button so that the three clips on the horn ring pass into the notches in the bottom of the button.
7. Connect up the horn wire.

S 248

REMOVAL OF HORN BUTTON UP TO AND INCLUDING THE 1967 MODEL

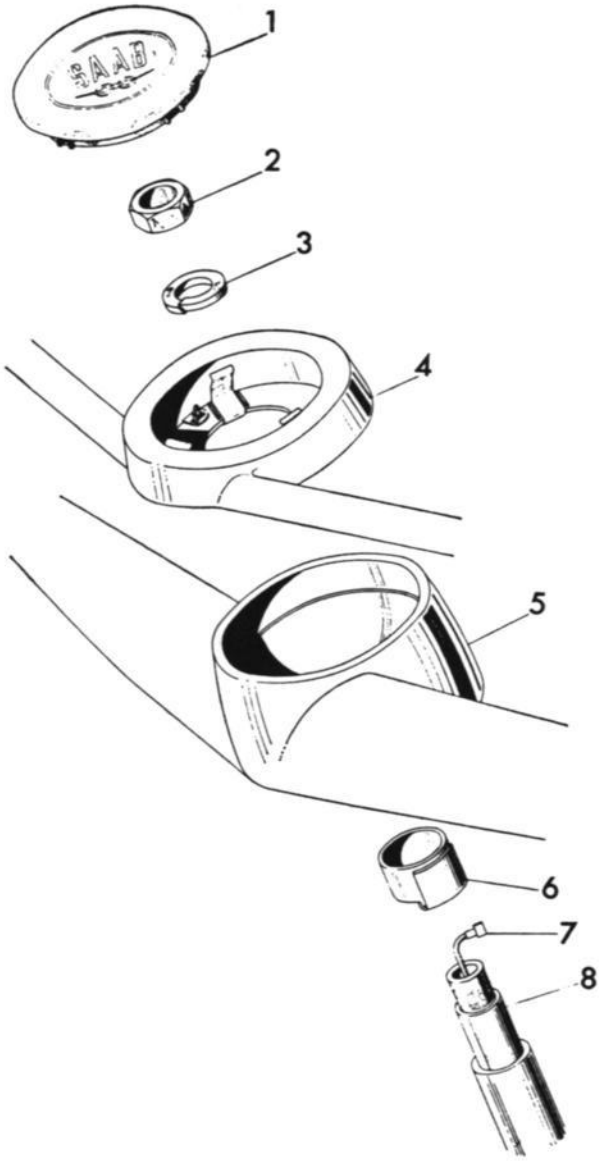

S 249

STEERING WHEEL AND HORN ASSEMBLY UP TO AND INCL. MODEL 1967

1. Horn button
2. Nut
3. Retaining washer
4. Horn ring
5. Steering wheel
6. Return yoke
7. Horn wire
8. Steering column

Steering wheel with safety pad from model 1968

Removal

1. Remove the safety pad by turning it counter-clockwise.
2. Unscrew the nut and remove the spring washer.
3. Lift away the steering wheel.
4. The return yoke for the directional signal switch can now be removed.

Reassembly

1. If removed, refit the return yoke.
2. Check the clearance between the return yoke and the projection on the directional indicator switch. The correct clearance is 0,008—0,024 in. (0.2—0.6 mm) with the switch at neutral. Adjust by inserting shims between the switch and the column stand.

> NOTE!
> Fit the return yoke so that its center line coincides with the center axis of the switch housing, when the wheels are straight ahead.

3. Fit the steering wheel on the column. Make sure that the front wheels are aligned straight ahead, and push the steering wheel on the column center pin so that the spokes of the wheel are aligned horizontally.
4. Refit the spring washer and the nut.

> NOTE!
> To protect the safety pad when fitting, smear with a suitable lubricant its underside, which comes into contact with the cover.

5. Fit the safety pad by screwing it downwards until resistance is felt, then tighten the safety pad approx. a further revolution (360°), until the cuts, made at the bottom side of the pad, grip and lock tight against the spokes of the steering wheel.

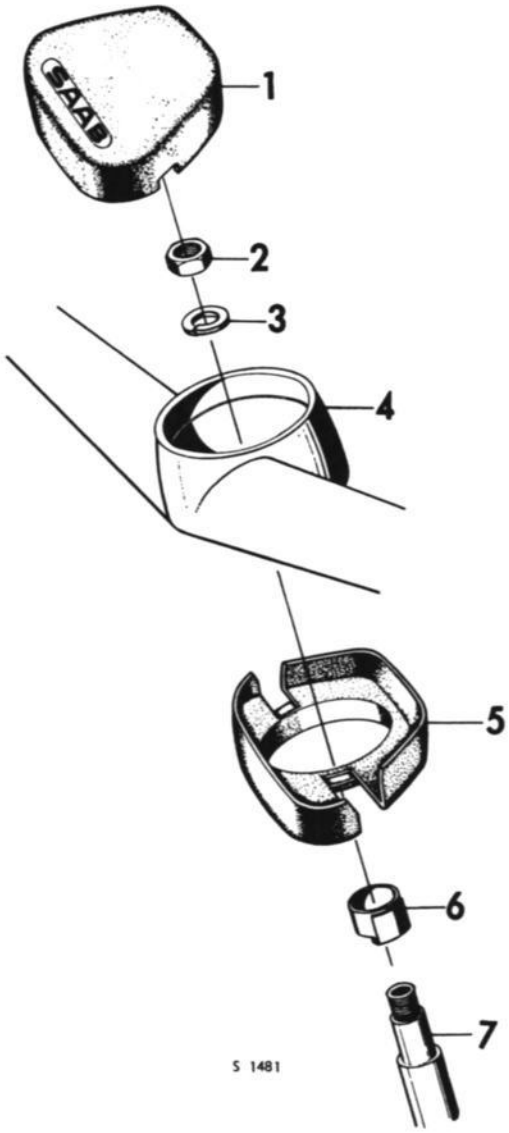

STEERING WHEEL WITH SAFETY PAD FROM MODEL 1968

1. Safety pad
2. Nut
3. Retaining washer
4. Steering wheel
5. Cover
6. Return yoke
7. Steering column

Steering wheel with safety pad from model 1970
Removal

1. Remove the steering wheel pad and the horn contact from the steering wheel by removing the four cross recess screws in the underside of the steering wheel spokes.
2. Unscrew the nut and remove the spring washer.
3. Lift away the steering wheel.
4. The return yoke for the directional signal switch can now be removed.

Reassembly

1. If removed, refit the return yoke.
2. Check the clearance between the return yoke and the projection on the directional indicator switch. The correct clearance is 0,008—0,024 in. (0.2—0.6 mm) with the switch at neutral. Adjust by inserting shims between the switch and the column stand.

> NOTE!
> Fit the return yoke so that its center line coincides with the center axis of the switch housing, when the wheels are straight ahead.

3. Fit the steering wheel on the column. Make sure that the front wheels are aligned straight ahead, and push the steering wheel on the column center pin so that the spokes of the wheel are aligned horizontally.
4. Refit the spring washer and the nut.
5. Fit the steering wheel pad and the horn contact to the steering wheel.

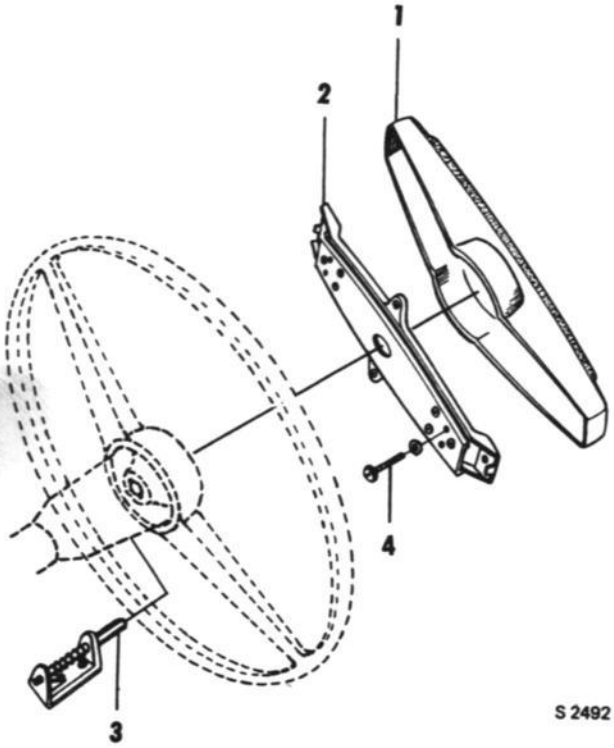

SIGNALING DEVICE AS FROM MODEL 1970

1. Safety pad
2. Horn contact
3. Sliding contact
4. Retaining screws (4 off)

STEERING COLUMN AND BEARINGS

Disassembly

Disassembly of the steering column also involves removal of the gear-shift mechanism, since these two units are mounted on the same stand.

1. Remove the steering wheel and horn-button assembly as described above.
2. Back off and remove the clamping screw at the column connection to the steering-gear pinion.
3. Back off and remove the nut from the upper end of the gear-shift shaft universal joint and drive out the taper pin, using tool No. 784083.
   If the taper pin is threaded at both ends, proceed as follows: Remove the nut and place it on the other end of the taper pin. Tighten the nut, thus loosening the pin. Collect the return spring if there is one above the joint.
4. Undo the two screws for the steering-column stand after having driven out the locking pins. The stand and steering column, together with the gear-shift shaft and lever, are now loose, and can be removed from the car.
5. Draw the column out of its bearing.
6. Remove the two rubber bushings together with the steering-column bushings.
7. Remove the cardboard sleeve between the bushings and if necessary the electric cables.

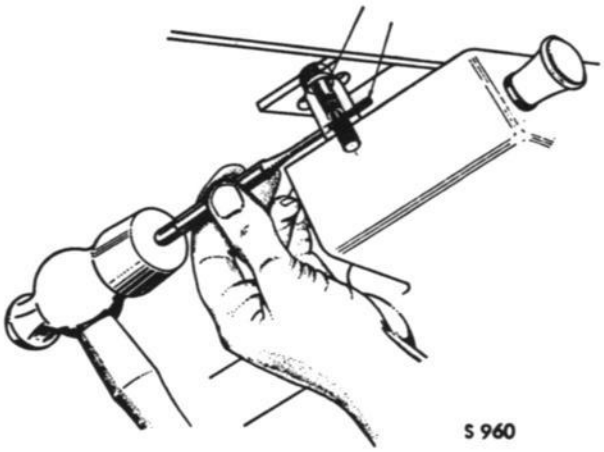

REMOVING LOCKING PINS ON STEERING-COLUMN STAND

Reassembly

1. Refit the rubber bushings together with the steering-column bushings. See fig.

Between the bushings fit the protective sleeve and the cables to the direction indicator switch.

> NOTE
>
> The upper rubber bushing is thinner than the lower one. Moreover, both bushings are tapered and must therefore be fitted so that the arrow on the locating lug points towards the steering wheel.

2. Pass the steering column into its bearing. On R.H.D. cars first put the plastic cone on the steering column.
3. Refit the assembly in the car. Adjust the position as described under "Adjustment of steering column stand" and secure the stand by tightening the two screws. Drive in the locking pins.
4. Refit the return spring and connect the gear-shift shaft to the universal joint with the taper pin.
5. Reconnect the steering-column joint to the steering-gear pinion and tighten the clamping screw.
6. Refit the steering wheel and horn-button assembly as described above.

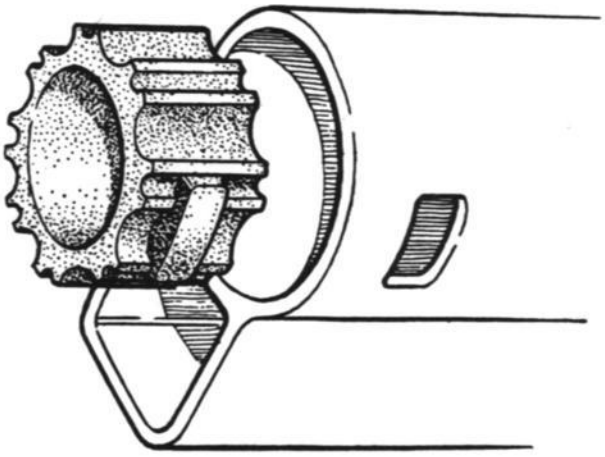

BUSHINGS, STEERING-COLUMN STAND

Adjustment of steering column stand

Make sure that the steering column stand is correctly adjusted in the vertical direction, since this entirely determines the gear-shift positions. The gear-shift lever play in the plane of the gear-shift shaft axis should be checked in the following manner:
Engage top gear and move the gear-shift shaft firmly but not roughly in both axial directions. When this is done the lever knob should move in the same direction as the shaft (in plane of shaft axis) 0.3–0.5 in. (8–12 mm).

> NOTE
>
> **Readjustment of the twist stop for the lock plunger is essential whenever the gear-shift mechanism has been dismantled and after adjustment of gear positions.**

GEAR-SHIFT MECHANISM

Righthand drive,

Diassembly

1. **If the complete gear-shift mechanism is to be removed from the car, disassemble the steering-column stand with column and gear-shift mechanism av described above.**
   If only the gear-shift lever and gear-shift shaft are to be removed, separate the gear-shift shaft universal joint from the shaft, collecting the spring for the return movement. Then remove the steering wheel and the directional signal switch with its plastic cover.
2. **Back off the nut and remove the screw passing through the gear-shift lever. The lever can now be removed.**
3. **Back off the three screws which hold the twist stop of the gear-shift lever lock. These screws are accessible through the three holes in the steering-column stand.**
4. **Pull the gear-shift shaft out of the stand.**
5. **Back off the clevis nut and remove the washer, the spring and the felt bushing from down inside the stand.**

As righthand drive are equipped with a special reverse catch, the following additional steps must be taken for these cars: Before pulling the gear-shift shaft out of the column, remove the yoke sleeve on the gear-shift shaft is pulled out of the stand, insert a pipe about 9.85 in. (250 mm) long and 0.63 in. (16 mm) in diameter up through the casing for the reverse catch, thus preventing the spring from moving out of its position. The casing containing the spring and the washers can now be removed, pull the pipe downwards so that the upper washer can be extracted sideways. Note that the spring must be compressed while this is being done. After having removed the washer, release the spring carefully. Collect the plastic washer, the pipe and the metal washer from under the spring.

Reassembly

1. **Insert a new felt bushing in the stand. Lubricate the bushing with SAAB Special Chassis Grease.**
2. **Place the spring and the washer on the clevis nut.**
3. **Screw in the clevis nut far enough to leave about 0.04 in. (1 mm) clearance between the clevis flange and the edge of the stand.**
4. **Pass the gear-shift shaft into the stand and, at the same time, slide on the twist stop for the gear-shift lever lock with the marking turned upwards to face the steering wheel. Turn the ignition key to the locked position so that the lock plunger slides into the recess in the twist stop.**
5. **Refit the gear lever, making sure that the three leaf springs are correctly positioned.**
6. **Pass the bolt through the gear-shift lever and the oval hole in the gear-shift shaft. Tighten the nut to eliminate all play but without impairing free lever movement.**
7. **Refit the directional signal switch with its plastic cover.**
8. **Reassemble the complete steering-column stand with column and gear-shift mechanism if previously removed. Reasemble the gear-shift shaft universal joint and the spring for the return movement.**
9. **Refit the steering wheel and horn-button assembly.**
10. **Adjust the steering-column stand in the vertical direction to ensure correct gear-shift positions and then adjust the twist stop for the gear-shift lever lock. See the description in the section concerned.**

FRONT ASSEMBLY, STEERING COLUMN SHIFT GEAR

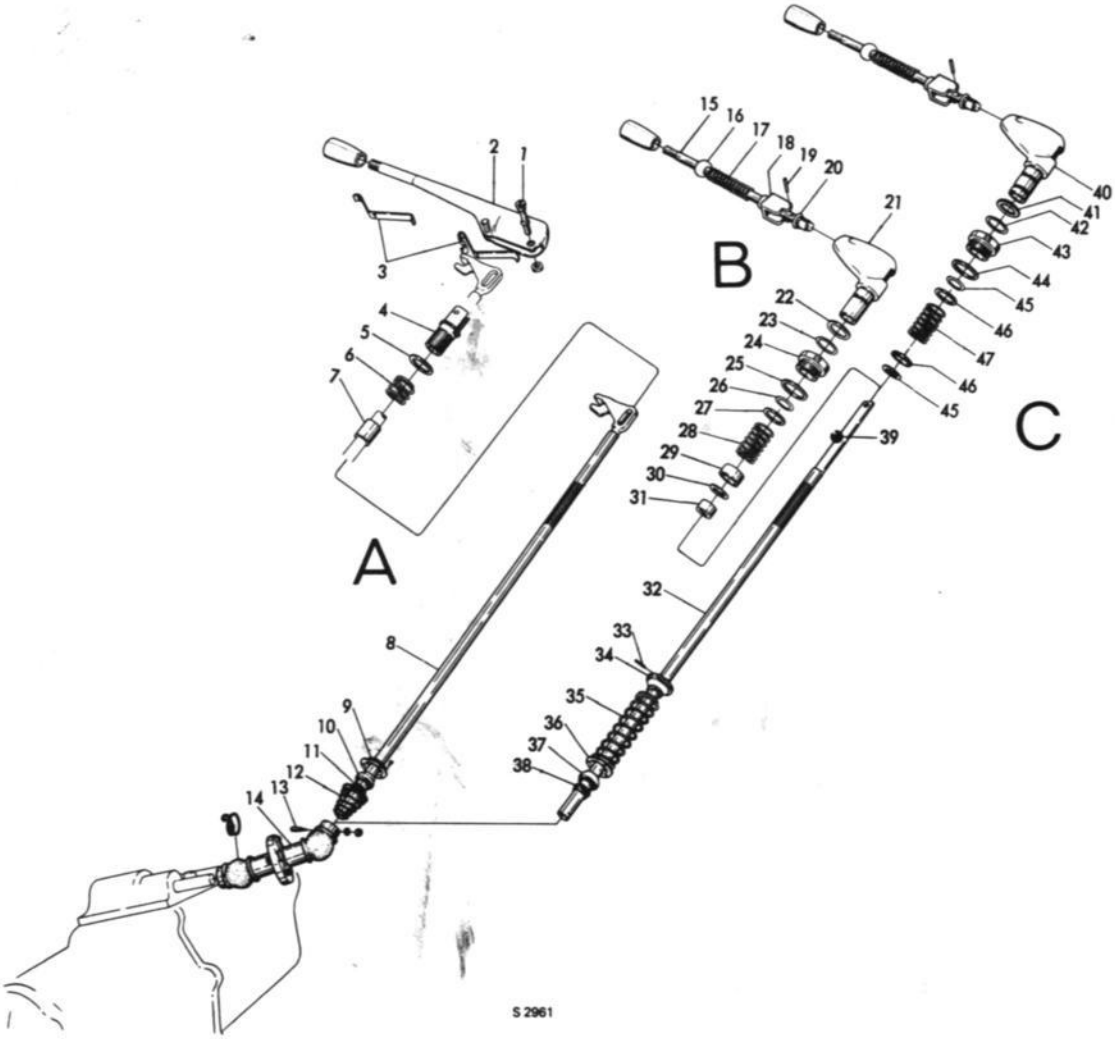

GEAR-SHIFT MECHANISM

A R. H. D.

1. Screw
2. Gear shift lever
3. Spring
4. Fork nut
5. Washer
6. Spring
7. Felt ring
8. Gear shift rod
9. Bracket
10. Bushing
11. Bushing
12. Return spring
13. Tapered pin
14. Universal joint

B. L. H. D.

15. Gear shift lever
16. Ball
17. Spring
18. Turn stop
19. Pin
20. Plastic bearing
21. Lever housing

22 and 23. Washers

24. Nut
25. Fiber washer
26. Snap ring
27. Washer
28. Spring
29. Bushing
30. Washer
31. Felt ring
32. Gear shift rod
33. Pin
34. Spring retainer
35. Spring
36. Bracket
37. Rubber bushing
38. Bushing
39. Rubber ball

C L. H. D.
later design

40. Lever housing

41 and 42. Washers

43. Nut
44. Fibre washer
45. Snap ring
46. Washer
47. Spring

As righthand drive are equipped with a special reverse catch, the following additional steps must be taken for these cars: Refit the casing for the reverse stop by passing through it a pipe or other suitable implement with a length of about 9.85 in. (250 mm) and 0.63 in. (16 mm) in diameter. Then pass onto the pipe the metal washer and the plastic washer forming the lower seat for the spring as well as the plastic collar. Next, pass the spring onto the pipe. Compress the spring and mount the upper metal washer from the side in order to lock the spring and then slide the pipe up through the washer. Now screw the casing, complete with spring and washers, to the stand.

While the gear-shift shaft is being passed into the stand and the casing for the reverse catch, pull the pipe used for assembly of the spring out gradually. When the gear-shift shaft has been passed through the casing, secure the yoke sleeve to the shaft by driving in the pin.

Lefthand drive

Disassembly

1. If the complete gear-shift mechanism is to be removed from the car, disassemble the steering-column stand with column and gear-shift mechanism as described above.
   If only the gear-shift lever and gear-shift shaft are to be removed, separate the gear-shift shaft universal joint from the shaft.
2. On the rear of the gear-shift lever housing is a square hole through which an arbor or other suitable implement can be passed and pressed against one shank of the turn guard at the same time as the gear-shift lever is pressed in and rotated through 1/4 turn.
3. Pull the gear-shift shaft downwards past the gear-shift lever so that it can be passed out through the square hole.
4. Screw the knob off the lever and remove the lever entirely. The plastic ball, spring and turn guard will now be released. Collect the plastic bearing from the end of the lever.
5. Back off and remove the stop screw on the bottom of the steering-column stand and unscrew the bright chromed nut. The gear-lever head can now be removed from the stand. Collect the fiber washer and the rubber grommet located between the gear-shift shaft and the gear-shift lever housing.
6. After removal of the retaining ring, the nut can be removed from the gear-shift lever housing. Collect the fiber washer and any shims.

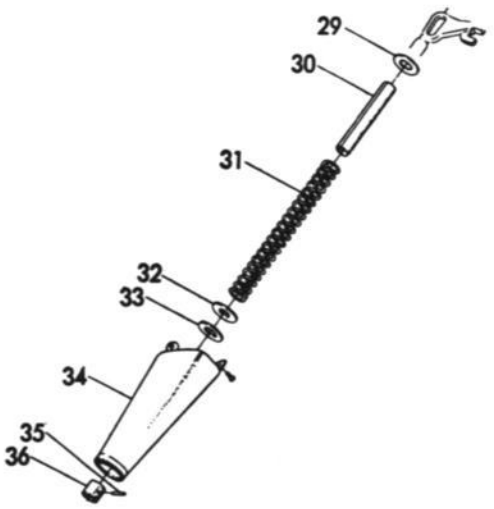

REVERSE CATCH R. H. D.

29. Washer
30. Plastic hose
31. Spring
32. Plastic washer
33. Washer
34. Casing
35. Pin
36. Carrier sleeve

7. If the gear-shift shaft is to be removed, take away the locking pin for the return spring on the lower end of the shaft.
8. Now move the gear-shift shaft downwards until it is released from the stand.
9. Remove the turn guard from the gear-shift lever lock, if fitted, and collect the return spring and the spring holder.
10. Remove the washer, spring, bushing, washer and felt ring from the steering-column stand. There are two different types, see fig.

Reassembly

1. Refit the felt ring, washer, bushing, spring and washer in the steering-column stand.
2. Fit the return spring, spring holder and gear-shift lever twist stop on the gear-shift shaft. with the marking on the latter facing upwards. Then slide the gear-shift shaft into the steering-column stand from underneath.
3. Refit the pin above the spring holder.
4. Put the fiber washer and the nut on the gear-shift lever housing and insert the retaining ring in its groove. Check the clearance between nut and retaining ring and fit the necessary number of shims under the fiber washer. The nut should have no clearance and be slightly stiff to turn. Note! Apply a moderate coating of SAAB Special Chassis Grease to the fiber washer and the internal bearing surfaces of the nut.
5. Refit the gear-shift lever housing in the steering-column stand. Be sure to turn the shaft so that its slanted hole comes in the right direction as shown in the fig. While the lever head is being passed down towards the stand, refit the rubber grommet between the gear-shift shaft and the lever housing. Place the grommet on the same side as the gear-shift lever.
6. Tighten the bright chromed nut and secure it with the stop screw.
7. Check that the plastic bearing with plastic ring and the roll pin are mounted on the gear-shift lever.
8. Pass the turn guard, the spring and the plastic ball onto the gear-shift lever.
9. Press the gear-shift shaft downwards and pass the gear-shift lever in through the square hole in its housing. Then screw on the knob.
10. Pull the gear-shift lever outwards in the knob, at the same time releasing the gear-shift shaft so that the lever enters the hole. Make sure that the plastic ring is not pulled off the lever in course of assembly.
11. Using an arbor or other suitable implement, press against one shank of the turn guard, at the same time turning the gear-shift lever through 1/4 turn, thus locking the lever.
12. Reassemble the complete steering-column stand with column and gear-shift mechanism if previously removed.
13. Refit the gear-shift shaft universal joint to the shaft.
14. Adjust the steering-column stand in the vertical direction to ensure correct gear-shift positions and then adjust the twist stop for the gear-shift lever lock.

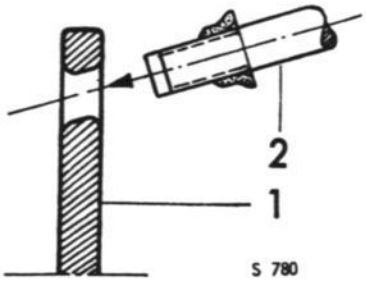

LOCATION OF GEAR-SHIFT LEVER IN THE GEAR SHIFT ROD

1. Gear shift rod
2. Gear shift lever

GEAR-SHIFT SHAFT UNIVERSAL JOINT

Disassembly and reassembly

The universal joints can be lubricated without being disassembled if the rubber dust excluders are turned aside.

1. Remove the fastener and drive out the taper pin, using tool No. 784083. See fig.
   If the taper pin is threaded at both ends, proceed as follows: Remove the nut and place it on the other end of the taper pin. Tighten the nut, thus loosening the pin.
2. Release the universal joint from the gear-shift shaft, collecting the gear-lever return spring which is located on the gear-shift shaft.
3. Remove the fastener and drive out the other taper pin in the same way.
4. Pull the joint off the transmission operating rod. Check the joint for excessive play or stiffness. If new dust excluders are to be fitted, remove the old grease and pack the joints with SAAB Special Grease before fitting the new dust excluders.
5. Refit the universal joint to the operating rod and drive in the taper pin. Make sure that the tapers in the joint and operating rod are properly aligned.
6. Refit the return spring to the gear-shift shaft if it has been removed. Then pass the universal joint onto the shaft and drive in the taper pin.
7. Refit the taper pin fastener.

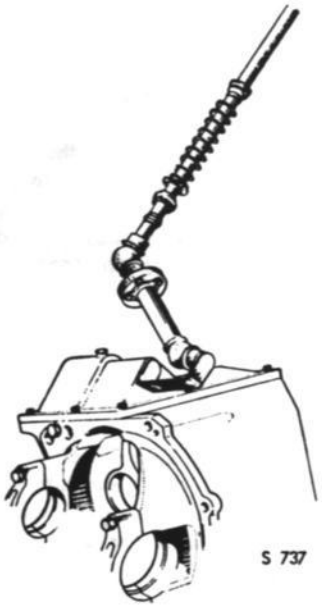

GEAR-SHIFT SHAFT UNIVERSAL JOINT, R. H. DRIVE CAR

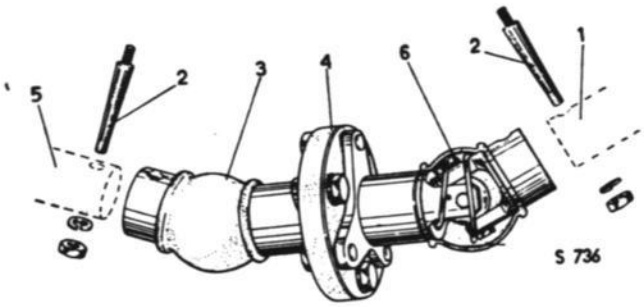

GEAR-SHIFT SHAFT UNIVERSAL JOINT, L. H. D. CAR

1. Gear shift rod
2. Conical pin with lock nut
3. Rubber boot
4. Rubber disc
5. Operating shaft, gear box
6. Spring

GEAR-LEVER LOCK, IGNITION LOCK

General

The SAAB V4 is fitted with a combined ignition and gear-lever lock. The gear-shift lever is locked when the reverse gear is engaged and the key is removed. The gear-lever and ignition lock has the following positions:

L. Locked. The lighting is out when the key is turned to locked position. The key can be taken out only when reverse gear is engaged.

G. Garage. Ignition, etc., is switched off but the gear-shift lever is unlocked. The key cannot be removed in this position.

K. Driving. Ignition is on. Current is supplied via the ignition switch to the fuel tank guage directionindicating flashers, fan motor, windshield wipers, horn and charge indicator light.

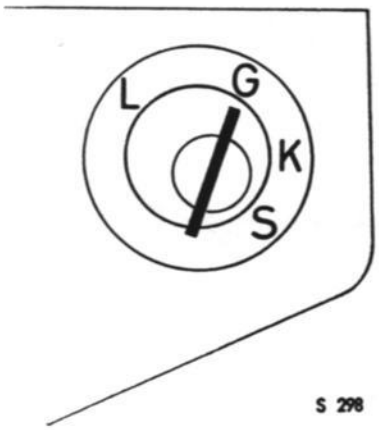

GEAR-LEVER AND IGNITION LOCK

S. Starting. This position has a spring return action. To The steering-column stand is secured by means of two screws to a bracket under the instrument panel. These screws have waists and are locked with roll pins. They can be slackened enough to allow adjustment of gear positions, but if the steering-column stand is to be removed, the roll pins must first be knocked out with an arbor.

The gear-lever lock consists of a twist stop secured to the gear-shift shaft by means of two clamping screws, one stop screw and knurls. The twist stop has a hole into which the lock plunger slides when the gear-shift lever is locked.

> **NOTE**
>
> Readjustment of the twist stop for the lock plunger is essential whenever the gear-shift mechanism has been dismantled and after adjustment of gear positions.

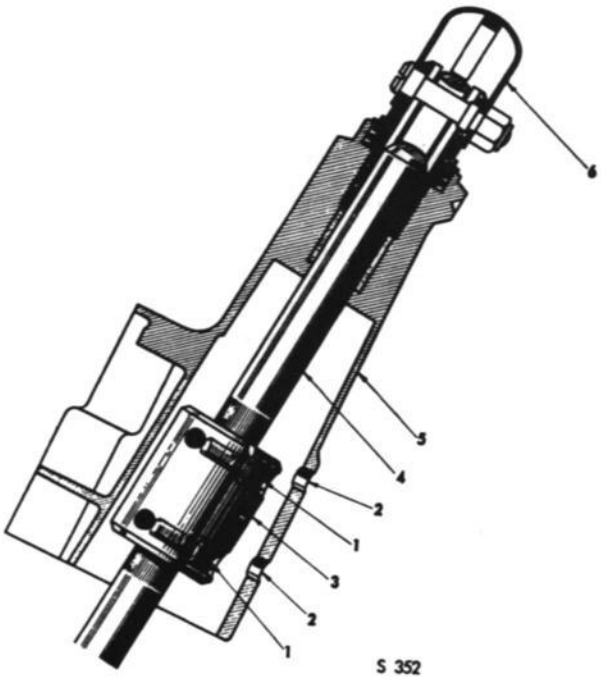

GEAR-LEVER LOCK, CUT-AWAY VIEW

1. Clamping screw
2. Adjusting hole
3. Twist stop
4. Gear-shift shaft
5. Steering-column stand
6. Gear-shift lever

Removal of twist stop

1. Engage 1st gear, thus providing access to two clamping screws on the twist stop through the holes (2) on the bottom of the steering-column stand — see fig. Undo these internal-hexagon screws with a 3/16" spanner.
2. Engage reverse gear and turn the ignition key to the locked position (L), enabling the stop screw which holds the twist stop to be backed off through the lower hole 2, in the steering column stand. See fig. on this and the preceding page.
3. The gear positions can now be adjusted by moving the steering-column stand in the ordinary way. If the ignition key is turned to position G, thereby releasing the twist stop, the gear-shift mechanism can then be dismantled.

> NOTE
>
> The clamping screws of the twist stop are always accessible when 1st gear is engaged and the stop screws when reverse gear is engaged.

Adjustment of twist stop

After adjustment of gear positions, readjustment of the twist stop is called for. The procedure is the following:

1. The twist stop is marked on the side that is to face upwards towards the steering wheel. The marking shows for which version the twist stop is designed, e.g. V-4 means left-hand drive, 4-speed.

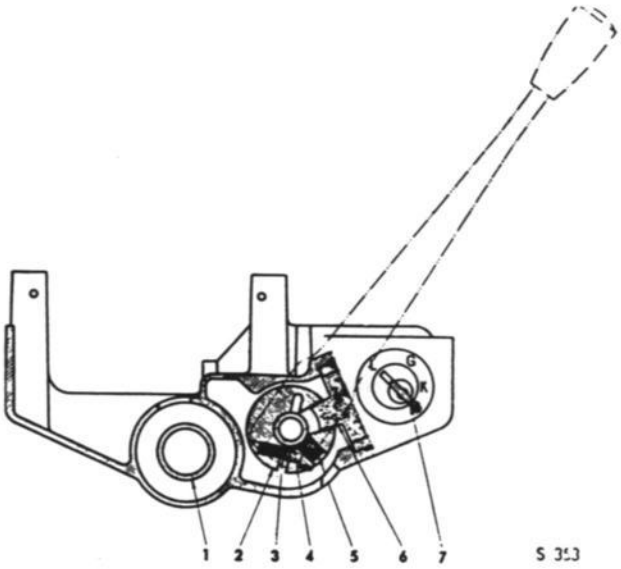

TWIST STOP AND LOCK PLUNGER

1. Steering column
2. Twist stop
3. Clamping screw
4. Gear-shift shaft
5. Stop screw
6. Lock plunger
7. Lock cylinder with key

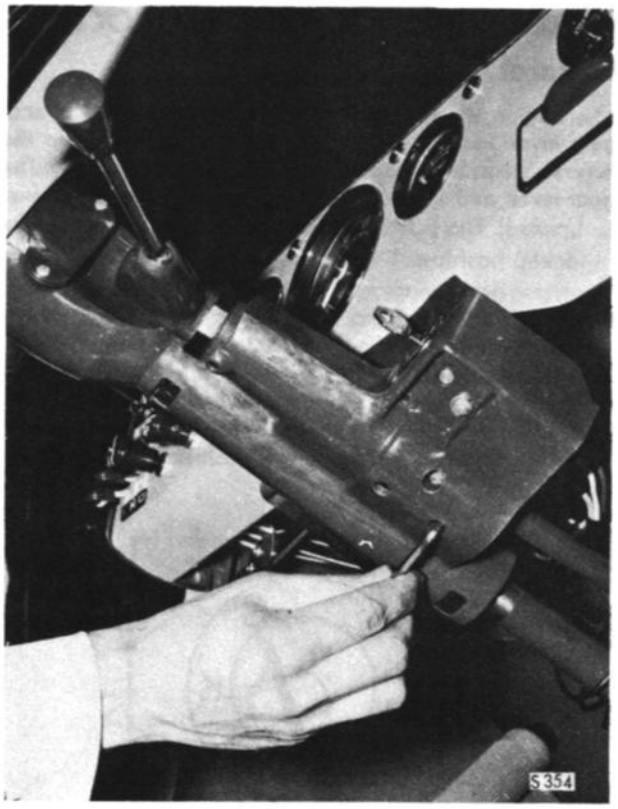

ADJUSTMENT OF TWIST STOP

2. Engage reverse gear and push the twist stop up. At the same time, turn the ignition key to the locked position (L) and check that the lock plunger finds its position in the twist stop.
3. The twist stop now hangs on the lock plunger. Move the twist stop up about 0.08 in. (2 mm) and tighten the stop screw slightly. NOTE! Do not tighten the screw up too hard, its purpose being merely to hold the twist stop during adjustment.
4. Turn the ignition key to position G and engage 1st gear, enabling two clamping screws on the twist stop to be tightened. Then engage reverse gear and slacken the stop screw. Return to 1st gear and tighten the clamping screws permanently. Now engage reverse gear again and tighten the stop screw enough to prevent it from working loose.

Note! On righthand drive cars there is a spring on the gear-shift shaft which serves as a reverse catch. This spring must be in place when the twist stop is adjusted.

IGNITION LOCK

Disassembly

1. Insert the ignition key and turn to righthand edge of the "ASSA" mark. (See fig.).
2. When the key is in this position, the catch pin in the lock cylinder can be pressed in by inserting a wire picklock in a hole on the underside of the steering-column stand. See figures.
3. Pull out the lock cylinder and remove the lock plug through the cylinder hole.
4. The gear-lever lock can now be removed, after removal of the retaining screw.

> **NOTE**
>
> When the lock cylinder is removed the key has no stop positions and can thus be turned a complete revolution. If the key takes up an incorrect position, the locking pins inside the cylinder may get in the way so that the key cannot be returned to the working position. To remedy this, tap the key and lock cylinder lightly against a wooden object with the retainer on the outside of the cylinder turned upwards.

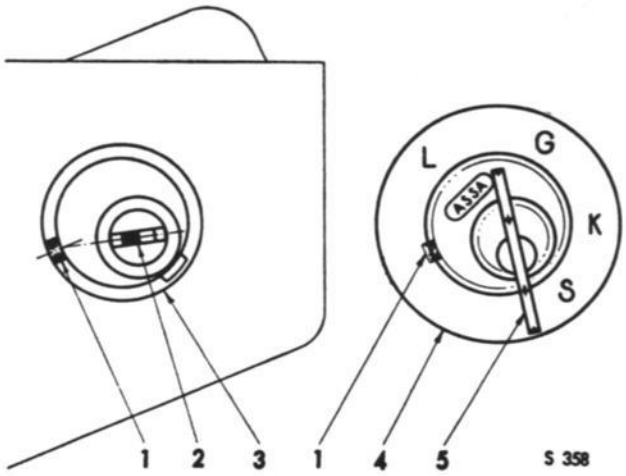

POSITION OF KEY AND LOCK PLUNGER DURING ASSEMBLY OR DISASSEMBLY

1. Catch pin
2. Position of locking pin during assembly of lock cylinder.
3. Gear-lever lock
4. Sign plate
5. Position of key during assembly of lock cylinder.

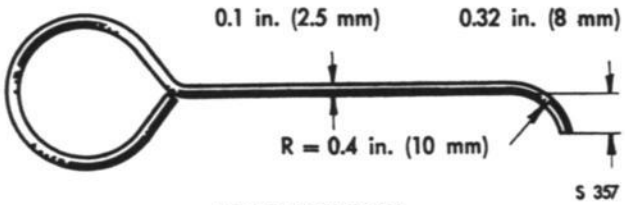

WIRE PICKLOCK

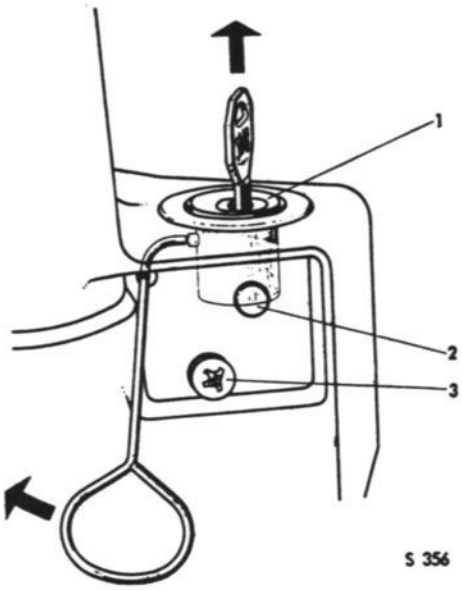

REMOVING LOCK CYLINDER

1. Lock cylinder
2. Lock plug
3. Retaining screw

Disassembly when key is missing

If the key has been lost or if it is necessary to remove the lock or the lock cylinder, the cylinder must be drilled before the catch pin can be pressed in. Drill an 0.12 in. (3 mm) hole in the cylinder to a depth of about 0.4 in. (10 mm) as illustrated.

S 364

DRILLING LOCK CYLINDER FOR REMOVAL WHEN KEY IS MISSING

1. Hole, diameter 0.12 in. (3 mm), depth 0.4 in. (10 mm)

Reassembly

1. Slide the lock plunger into the gear-lever lock and then fit the lock into the steering-column stand.
2. Insert the screw and drive it in slightly. Insert the lock plug.
3. Using flat-nose pliers, turn the pin in the lock until it enters the groove in the end of the lock cylinder — see fig.
4. Turn the key so that it comes to the right-hand part of the "ASSA" mark, see fig, and press the catch pin in.
5. Now place the sign plate over the pin so that it is held in the pressed-in position. Adjust the sign plate so that it fits against the retaining lug on the outside of the cylinder.
6. Insert the lock cylinder with the sign plate in the gear-lever lock and tighten the screw permanently.

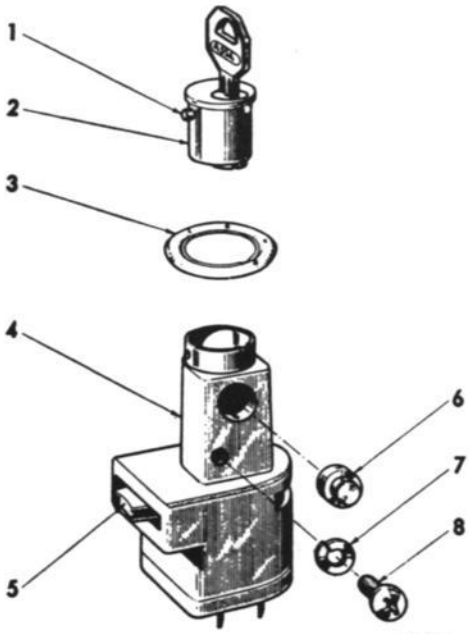

S 355

LOCK CYLINDER AND GEAR-LEVER LOCK

1. Catch pin
2. Lock cylinder
3. Sign plate
4. Gear-lever lock
5. Lock plunger
6. Lock plug
7. Retaining washer
8. Cross-recess screw

STEERING GEAR

General

The steering gear is accurately adjusted ex-works and should never be disassembled unnecessarily. To ensure satisfactory function, the steering gear must be lubricated copiously, but not so excessively that the steering-gear rubber bellows are completely filled with grease.

To lubricate the steering gear, turn the steering wheel as far as it goes to the left, to the right on R.H.D. cars. Use SAAB Special Grease.

Unwanted noise in the steering gear is a sign that adjustment is necessary — see below. Worn or damaged parts should be replaced by new ones.

The illustration shows a steering gear for a car with lefthand drive, but as the steering gear for cars with right-hand drive is similar in principle, the following instructions are equally applicable to both versions.

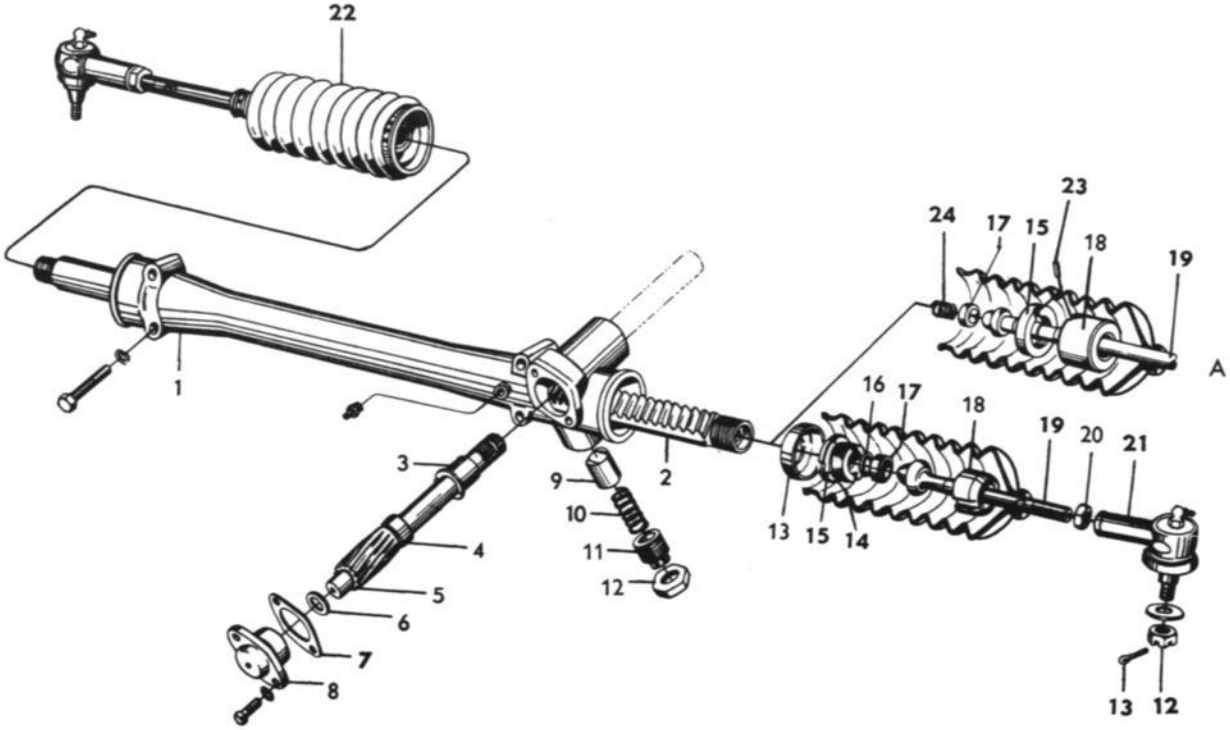

S 2137

STEERING GEAR, L. H. D. CAR, DISASSEMBLED

1. Steering-gear housing
2. Rack
3. Bushing
4. Spacer sleeve
5. Pinion
6. Washer
7. Shim
8. Bearing
9. Piston
10. Spring
11. Screw
12. Nut
13. Cotter pin
14. Shim
15. Nut
16. Flat spring
17. Bearing cup, inner
18. Bearing cup, outer
19. Tie-rod
20. Nut
21. Tie-rod end
22. Rubber bellows
23. Locking pin
24. Spring

A. Alternative design

Removal of steering gear

The following description is applicable on left hand drive cars and right hand drive cars as well. (Text in brackets is applicable on right hand drive cars).

1. Remove the hood.
2. Disconnect one of the battery cables.
3. Jack up the front part of the car so that both wheels are clear of the floor.
4. Take off the front wheels.
5. Disconnect the tie-rod ends from the steering arms. Use tool No. 899540 for the tie-rod end.
6. Back off the nut and remove the tie-rod end from the left tie-rod on a L.H.D. car (on a R.H.D. car he right).
7. Remove the lower taper pin from the gear-shift shaft universal joint and release the joint from the transmission case shift fork. Use tool No. 784083.
   If the taper pin is threaded at both ends, proceed as follows:
   Remove the nut and place it on the other end of the taper pin. Tighten the nut, thus loosening the pin.
8. Release the freewheel control from the transmission.
9. Detach the slave cylinder from the clutch housing and hang it up on the hoses for the fresh-air heater.
10. Release the throttle return spring and attach it in some suitable way so that the throttle spindle is fully deflected.
11. Disconnect the speedometer drive cable from the transmission case.
12. Turn the steering wheel to full left lock on a LHD car (and full right lock on a RHD car). Back off and remove the clamping screw in the steering-column yoke and lift the steering wheel to pull the column out of the yoke. Remove the dash-panel cardboard lining where the steering-gear stub passes through the dash panel.
13. Back off and remove the four steering-gear retaining bolts.
14. Remove the rubber grommet in the dash panel. Lift the lefthand (resp. righthand on R.H.D. cars) side of the steering gear forwards over the gearshift fork shaft until the stub axle on the steering gear is clear of the dash panel.
15. Pass the steering gear out a little through the right-hand — resp. lefthand — wheel house until the left tie-rod clears the wheel-house wall. Lift the steering gear out forwards and upwards between the wheel-house stay and the lefthand wheel house. See fig.

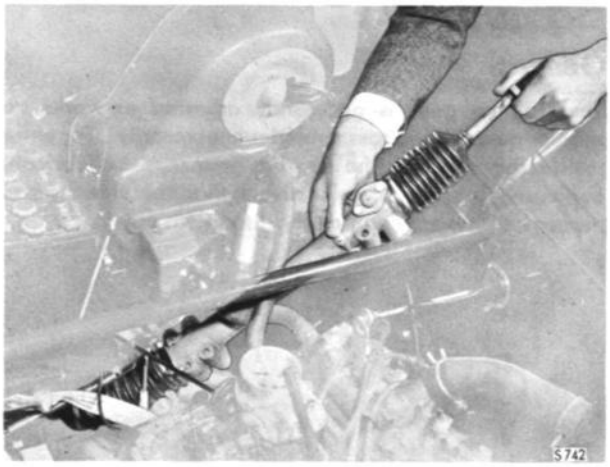

REMOVAL OF STEERING GEAR

Installation of steering gear

1. Remove the tie-rod end from the lefthand tie-rod. (righthand on a R.H.D. car)
2. Slide the rack over so that lefthand (resp. right-hand) tie-rod takes up its inner position.
3. Insert the steering gear between the lefthand. (resp. righthand) wheel house and the wheel-house stay in the opposite way to removal.
4. Pass the steering gear in towards the dash panel in the opposite way to removal and place the rubber seal on the stub axle to avoid damaging it.
5. Pass the stub axle through the dash panel and refit the rubber seal in the dash-panel hole.
6. Refit the four retaining bolts in the steering gear. Before tightening these bolts, make sure that the speedometer drive cable is not caught between the steering gear and the dash panel.

7. Refit the lefthand (resp. righthand) tie-rod end.
8. Reconnect the tie-rod ends to the steering arms. Tighten the nuts and secure with cotter pins.
9. Put on the wheels and lower the car to the floor.
10. Refit the freewheel control and gear-shift shaft universal joint.
11. Reconnect the speedometer drive cable to the transmission case.
12. Refit the slave cylinder to the clutch housing.
13. Reconnect the throttle return spring.
14. Align the wheels straight ahead, refit the cardboard dash-panel lining and reconnect the steering column.
15. Check the toe-in and tighten the locknuts at the tie-rod ends.
16. Check the alignment of the steering wheel and refit the clamping screw in the yoke on the steering column.
17. If necessary, grease the tie-rod ends.
18. Reconnect the battery cable.
19. Refit the engine hood.

As from the 1968 model, there is an alternative steering gear featuring a different inner ball joint. As from the 1969 model, only the new type is used.

Disassembly of steering gear, previous design

1. Back off and remove the locknuts (see fig.) and remove the tie-rod ends.
2. Release the clamps and take off the rubber bellows.
3. Bend up the tabs on the retaining washers.
4. If the gear pinion has been removed, put it back in place.
5. Release both tie-rod ball joints, using tool No. 784071.
6. Remove the pinion.
7. Disassemble the ball joints and collect the shims, the inner ball seats and the retainer.
8. Withdraw the rack from the steering-gear housing.
9. Remove the pinion spacer. If they are to be renewed, drive out the pinion bushing and the bushing on the R.H. side of the steering gear.
   The last mentioned bushing may be found locked with a pin.

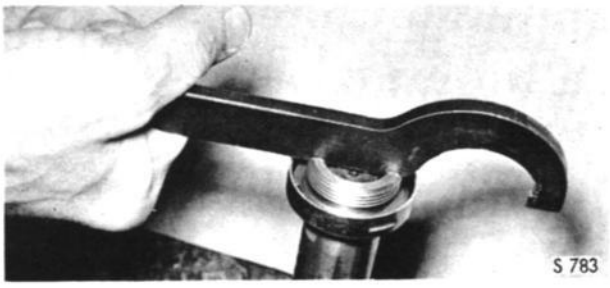

REMOVAL AND FITTING OF NUT, TOOL 784071

Reassembly of steering, gear, previous design

The steering gear must be reassembled under conditions of scrupulous cleanliness. Lubricate the rack and pinion, bearing points and other sliding surfaces with SAAB Special Grease.

1. If removed, drive the pinion bushing into the steering-gear housing.
2. Place a new retaining washer on the pinion end of the rack and screw on the nut with tool No. 784071.
3. Locate the shims on the nut and place the inner ball seat and retainer inside the nut. Position the retainer with its concave side facing the ball seat.
4. Pass the rack and pinion into the steering-gear housing.

> **NOTE**
>
> In assembling the steering gear, the pinion spacer must be refitted before the rack is passed into the housing.

5. Pass the outer seat onto the tie-rod and secure it to the nut with the aid of the special tool, No. 784071.
6. Check that the ball joint is correctly shimmed. If not, release the ball seat and alter the shim combination as indicated below under "Adjustment".
7. After proper adjustment of the ball joint, bend the tabs of the retaining washers down into the grooves on the outer ball seat and into the notches in the nut. See fig.

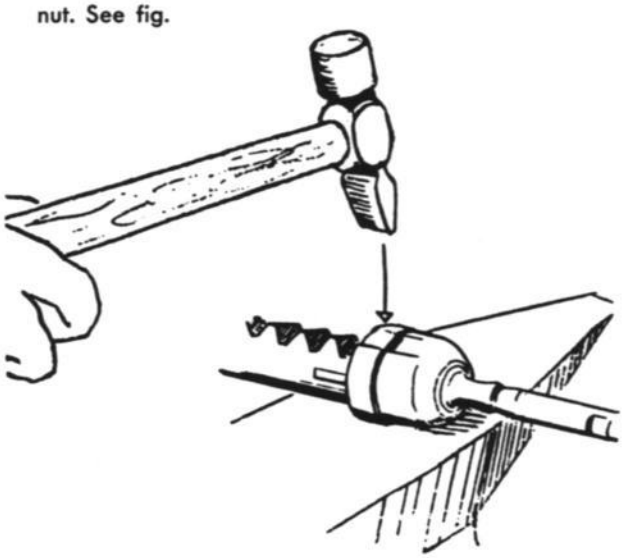

SECURING INNER BALL JOINT

8. Refit the other ball joint and adjust in the same way. Remember to refit the pinion first.
9. First adjust the axial play of the pinion and then the radial play of the rack. See below under "Adjustment".
10. Ease the bellows over the tie-rod (see fig.) and clamp them to the steering-gear housing and tie-rods. Do not tighten hard enough to prevent rotation of the tie-rods.
11. Refit the locknuts and screw the tie-rod ends to the tie rods.

Disassembly of steering gear, new design

1. Slacken the lock nuts, and remove the tie-rod ends.
2. Release the clamps, and take off the rubber bellows.
3. Remove, by drilling, the lock pins from the inner ball joints 3/16" (4.75 mm).

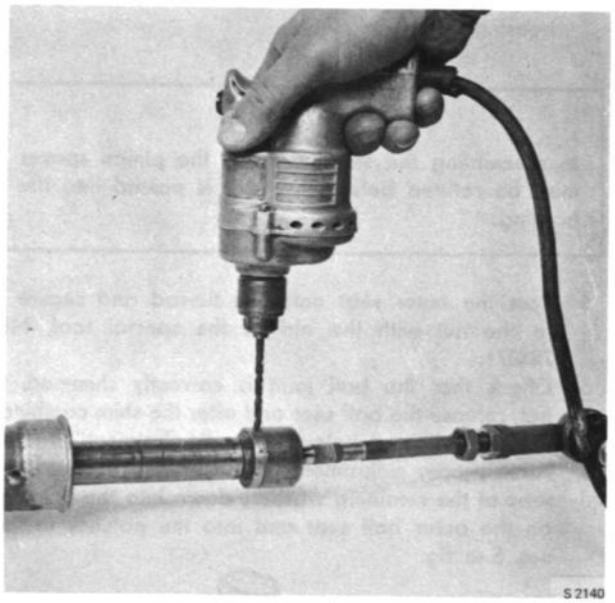

BORING THE LOCK PIN

4. Remove the outer bearing cup and the lock nut with the tools 784071 and 783962.

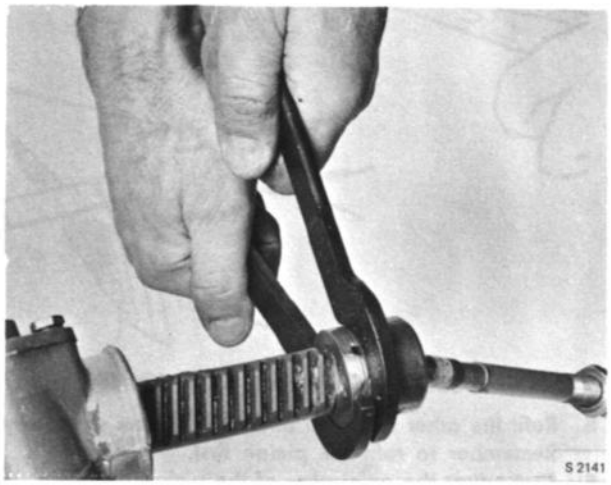

REMOVAL OF OUTER BEARING CUP AND LOCK NUT

Tool 784071 and 783962

5. Loosen nut and bolt, and remove piston and spring from the steering-gear housing.
6. Loosen the bolts of the pinion bearing, and lift out bearing and pinion.
7. Pull the rack out.
8. Remove the spacer ring from the pinion. Press the pinion bushing out.

Reassembly of steering gear, new design

Exercise the greatest cleanliness when reassembling. Lubricate the rack and pinion, bearing points and other sliding surfaces with SAAB Special chassis grease.

1. If removed, press the pinion bushing into the steering-gear housing.
2. Fit the inner ball joint to the pinion end of the rack. Adjust to the correct play, tighten the lock nut, drill a new hole for the lock pin 3/16" (4.75 mm), and drive the latter in.
   Furthermore, see the section "Adjustment".
3. Pass the rack into the steering-gear housing. Place the spacer sleeve behind the rack, and then fit the pinion. Adjust, first the axial play of the pinion, then the radial play of the rack. See "Adjustment".
4. Refit the other ball joint, and adjust in the way described under paragraph 2.
5. Ease the rubber bellows on, and clamp them to the steering gear and tie-rods respectively. See to it that the tie-rod can be turned in the bellows.
6. Refit the lock nuts and screw the tie-rod ends to the tie-rods.

Inspection of steering-gear components

After considerable mileage, and especially if lubrication is unsatisfactory, the rack may wear unevenly. If there is appreciable wear on its cylindrical part, the rack should be rejected and a new one fitted. Also check the rack bearing in the steering-gear housing, appropriately by comparison with a new rack. If wear is excessive, the bushing which is pressed into the housing can be changed. Examine the teeth of both the rack and the pinion for wear. All the teeth do not get worn uniformly, and those which are in mesh when the car is driven straight ahead will be worn the most. However, if lubrication is satisfactory there will be very little wear even on the most affected teeth.

If the rack teeth are abnormally worn the function of the steering gear will deteriorate and adjustment becomes more difficult. In these circumstances a new rack should be fitted.

Moderate wear on the pinion, on the other hand, may be corrected by rotating this item through half a turn, so that the teeth worn the most will be farthest away from the rack when the car is being driven straight ahead. Nevertheless, the provision of a new pinion is advocated. Check the outer and inner tie-rod ball joints. The outer ones are self-adjusting for moderate amounts of wear, but if free play has developed the entire ball joint must be rejected and a new one fitted. The components of the inner ball joints are subjected to but little wear if lubrication is satisfactory. However, if noticeable wear has occurred, the affected parts should be changed.

Adjustment

The following adjustments may be necessary:

1. Pinion axial play.
2. Rack radial play.
3. Tie-rod inner ball joints.

Adjustment number 3 necessitates removal of the steering gear, but the other adjustments can be done quite simply in the car, unless removal of the steering gear is necessary for some other reason. The inner ball joint very seldom requires adjustment, since there is very little wear here and the ball joint is to some extent self-adjusting.

Adjustment of pinion axial play

The occurrence of noise, knocking, etc., in the steering mechanism indicates the advisability of examining the pinion for axial and radial play.

Excessive play may occur after a new part has been fitted or as the result of wear. Normally, wear is very slight and adjustment on this account is very seldom called for, provided that lubrication is satisfactory.

Excessive axial play in the pinion (the column) can be corrected by inserting shims under the pinion cover. The clearance between the pinion and the cover should on steering gears of the previous design (up to and incl. model 1967 be 0.004–0.008 in. (0.1–0.2 mm). This can be provided by a suitable combination of shims, which are available in thicknesses of 0.004 and 0.012 in. (0.1 and 0.3 mm). On steering gears of the new design (as from model 1968), the clearance between the pinion and the cover should be 0.005 in. (0.12 mm). For this type of steering gear, shims are available in the following thickness: 0.0276 in. (0.07 mm), 0.004 in. (0.1 mm), 0.012 in. (0.3 mm), and 0.028 in. (0.7 mm).

1. To carry out the adjustment, which can be done without removing the steering gear, jack up the front part of the car so that both wheels are clear of the floor.
2. Back off the locknut, and retard the adjusting screw for rack radial play enough to completely relax the spring tension.
3. Back off the two cover bolts at the pinion end.

4. Remove the cover, together with the shims located under it.
5. Change the shims to give the correct combination.
6. Check that the washer is in position, and apply a blob of SAAB Special Grease around the pinion stub. Refit the cover and shims, and tighten the bolts. Remember to fit the retaining washers.
7. After adjustment, check that the pinion moves freely. If the pinion is stiff, the thickness of the shim combination is too small, and readjustment is called for.
8. Adjust the radial play of the rack as described in the following section.

Adjustment of rack radial play

After adjustment of the axial play of the pinion, the radial play of the rack must be adjusted, using the adjusting screw located underneath the steering gear. This adjustment, too, is most easily carried out without removing the steering gear from the car.

1. Back off the locknut.
2. Tighten the adjusting screw to the smallest possible play without the rack moving stiffly.
3. Tighten the locknut.
4. Turn the steering wheel as far as it goes in both directions and check that rack movement is not stiff in any position.

Adjustment of tie-rod inner ball joints

The tie-rods, as illustrated, are identical for the right and left sides. The rack end of the tie-rods is made with double balls, while at the other end the tie-rods are threaded for connection to the outer ball joints.

Previous design

1. The steering gear must be removed before the inner ball joint can be adjusted.
2. Release the clamps and remove the rubber bellows.
3. Pull the rack out to one side first. Bend up the tab on the retaining washer and detach the outer ball seat and nut with the aid of tool No. 784071.
4. Fit a new retaining washer and then tighten the nut, using tool No. 784071.

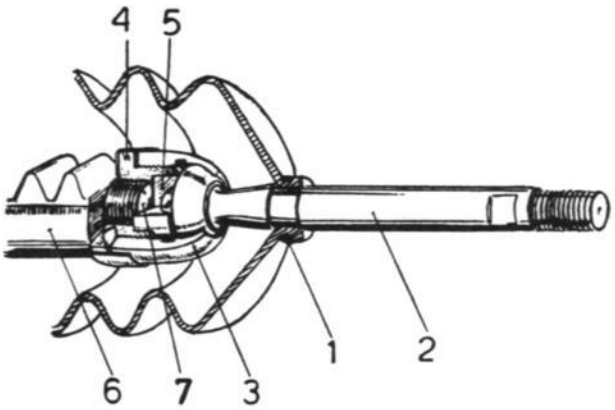

INNER BALL JOINT

1. Clamp
2. Tie-rod
3. Outer ball seat
4. Nut
5. Inner ball seat
6. Rack
7. Washer

5. Place a suitable combination of shims on the nut, and insert the inner ball seat and locating washer inside the nut. Position the washer with the concave side facing the ball seat.
6. Pass the outer ball seat onto the tie-rod and tighten with tool No. 784071.

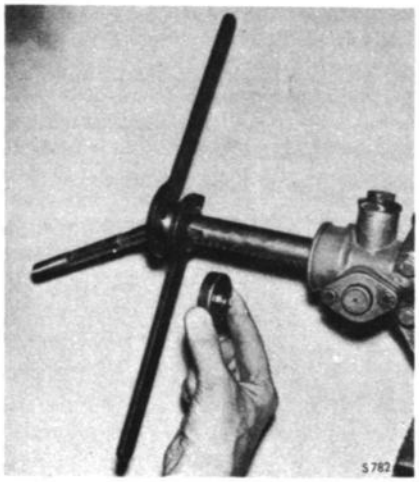

REMOVAL OF OUTER BALL SEAT FROM THE NUT, WHEN RE-SHIMMING.

7. Check that the shimming is correct. The ball joint should not have any play at all, but nor should it move stiffly in any direction. If the rack and tie-rod are held vertically, the ball joint should be tightened so much that the tie-rod, with tie-rod end attached, can be set at any angle whatsoever without falling down of its own weight.

> CAUTION
>
> The tie-rod must not on any account be excessively stiff in any position. It should be possible to move it fully in all directions by light manual pressure.

8. If shimming is unsatisfactory, the outer ball seat must be removed again and the number of shims increased or decreased as necessary. After this, secure the retaining washer.
9. Repeat the adjustment procedure for the other tie-rod.
10. Refit the bellows and install the steering gear in the car.

New design

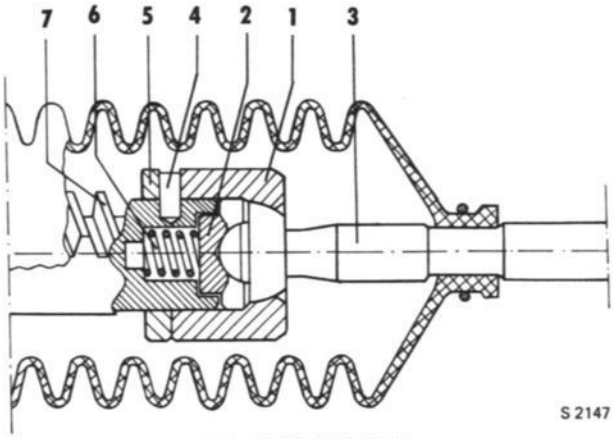

INNER BALL JOINT, NEW DESIGN

1. Outer bearing cup
2. Inner bearing cup
3. Tie-rod
4. Lock pin
5. Lock nut
6. Spring
7. Rack

1. The steering gear must be removed before the inner ball joints can be adjusted.
2. Release the clamps, and remove the rubber bellows.
3. Pull the rack out to one side. Remove, by drilling, the lock pin from the ball joint.
4. Remove the outer bearing cup and the lock nut with the tools 784071 and 783962.

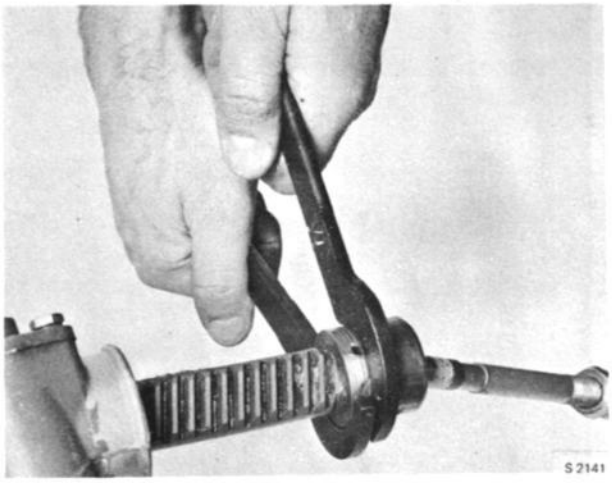

REMOVAL OF OUTER BEARING CUP AND LOCK NUT
Tool 784071 and 783962

5. Clean and inspect the parts. Renew the may-be defective parts.
6. Refit the nut to the rack. Pass the outer bearing cup onto the tie-rod, and fill the cup with SAAB Special chassis grease. Fit the spring and the inner bearing cup, and tighten the bearing cup.
7. When tightening the bearing cup, remember: the ball joint should not have any play at all, but nor should it move stiffly in any direction. If the rack and tie-rod are held vertically, the ball joint should be tightened so much that the tie-rod, with the tie-rod end attached, can be set at any angle whatsoever without falling down of its own weight.

> CAUTION
>
> The tie-rod must not on any account be excessively stiff in any position. It should be possible to move it fully in all directions by light manual pressure.

8. Tighten the lock nu to the bearing cup with the tools 783962 and 784071. Check again that the ball joint is tightened up correctly. Drill a new hole for the lock pin 3/16" = 4.75 mm, depth 4.48 in. (12 mm), and fit a new lock pin. Secure the lock pin by 4 center punches at the edge of the hole. See to it that the new hole be located at least 45° from the key grip hole in the lock nut. Take every precuation to prevent drillings from entering the steering gear.

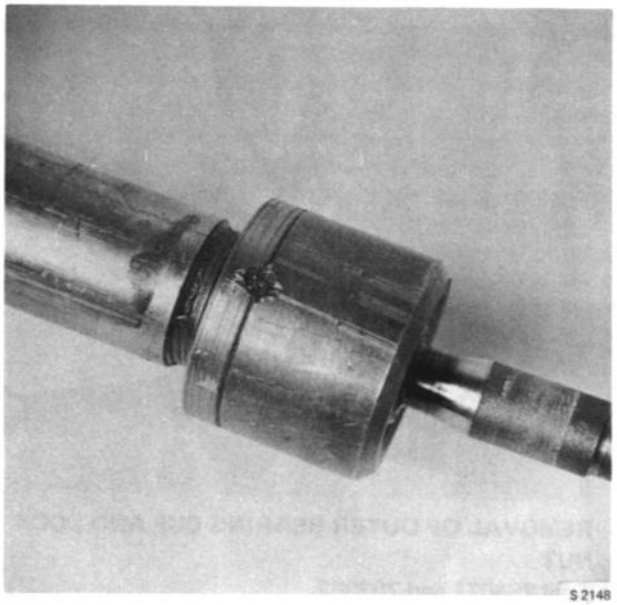

S 2148

SECURING LOCK PIN WITH CENTER PUNCHES

9. The final adjustment is then made in the same way as that used for the other tie-rod.
10. Fit the rubber bellows, and install the steering gear into the car.

> NOTE
>
> Removal of the steering gear from the car provides a convenient opportunity for checking and adjusting the axial play of the pinion and then the radial play of the rack.

Other measures

If the steering gear is still stiff in any position after adjustment of the rack and pinion, this is probably due to stresses incurred when tightening the bolts. Back off the two retaining bolts at the end farthest away from the pinion and insert a spacer under the steering gear at the bolt where it does not lie flush. On some cars, a spacer has already been fitted at the works.

Replacement of steering-gear dust excluder

If the bellows on the steering gear are damaged, they should be renewed without delay, as otherwise dirt and foreign matter may enter the steering gear and cause seizing.

1. Jack up the front part of the car and take off the wheel.
2. Remove the tie-rod ends as described in section 643.
3. Release the bellows clamps at the steering gear housing and tie-rod, and remove the bellows.
4. Remove all old grease and put on a new bellows. Tighten the clamps.
5. Refit the tie-rod end and reconnect it to the steering arm.
6. Refit the wheel and lower the car to the floor.
7. Grease the steering gear and adjust the toe-in as described in Section 601. Tighten the locknut.

TIE-ROD ENDS

General

The outer ball joints, or tie-rod ends, are screwed to the tie-rods and secured with the locknuts 3. The total length of the tie-rod can be reduced or increased by slackening the locknuts and turning the tie-rod to the right or left with a wrench applied to its flats. This is necessary in order to adjust the toe-in.

The tie-rod is connected to the steering arm of the steering knuckle by means of a tapered pivot, which fits into correspondingly tapered holes in the steering arm. The pivot is secured by a castle nut and cotter pin. The tie-rod ends cannot be dismantled. They are self-adjusting for moderate wear, and consequently seldom need changing.

Damage arising through external influences, such as a collision or other accident, may, however, make it necessary to change both tie-rods and tie-rod ends. As a safety measure, damaged tie-rod ends should be changed as soon as possible after the damage is discovered.

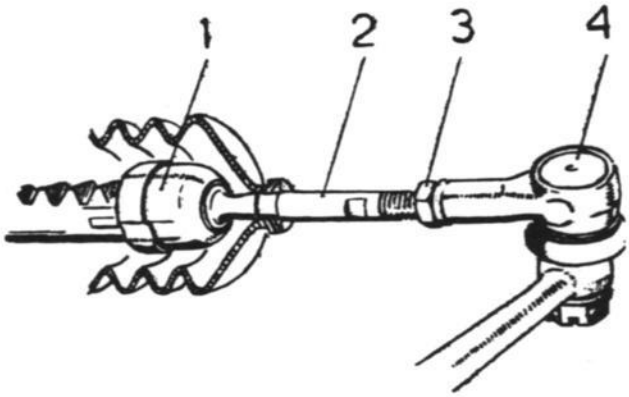

TIE-ROD ASSEMBLY

1. Inner ball joint
2. Tie-rod
3. Locknut
4. Tie-rod end

Replacement of tie-rod ends

The tie-rod ends cannot be disassembled. Consequently, if excessive play develops the tie-rod ends must be renewed.

1. Jack up the front part of the car and take off the wheel.
2. Remove the cotter pin 7, the castle nut 6 and the washer 5. See fig.
3. Apply the puller, tool No 899540 and release the pivot from the steering arm. See fig. Do not strike off the pivot, since such action could damage both the pivot itself and other parts of the unit.

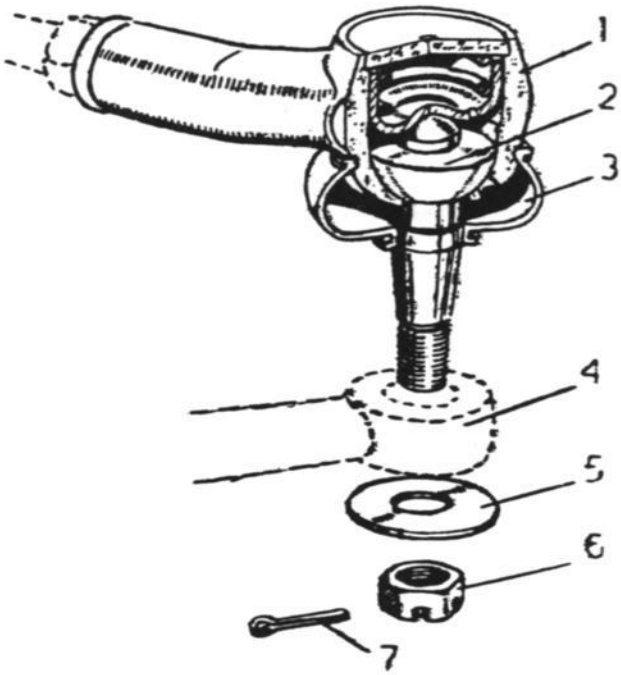

TIE-ROD END

1. Body
2. Pivot
3. Rubber seal
4. Steering arm
5. Washer
6. Castle nut
7. Cotter pin

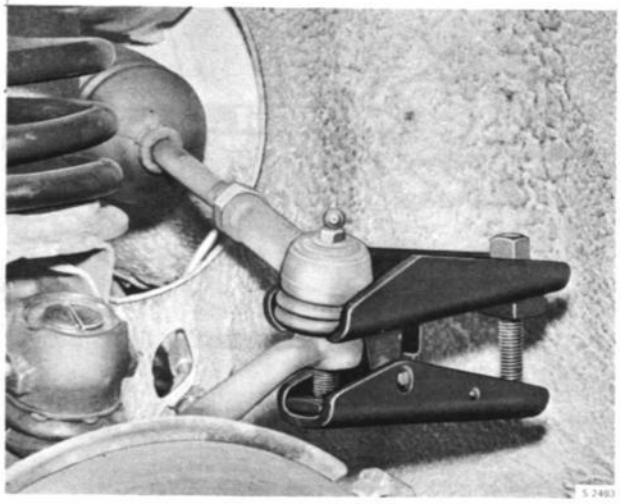

RELEASING THE TIE-ROD END WITH TOOL No. 899540

4. Back off the nut which secures the tie-rod end to the tie-rod.
5. Screw the tie-rod end off the rod.
6. Screw a new tie-rod end onto the rod, but do not secure it by tightening the locknut.
7. Connect the pivot to the steering arm. Tighten the castle nut to a torque of 25—36 ft-lb (3.5—5 kgm), and fit a new cotter pin.
8. Refit the wheel and lower the car to the floor.
9. Check and adjust toe-in as described in section 601.

> IMPORTANT
> Remember to retighten the locknut after adjustment.

Replacement of rubber seal

A rubber seal is fitted to each ball joint. If this is damaged so that it no longer affords an effective seal, it must be rejected and a new one fitted. The procedure is as follows:

1. Jack up the car and remove the wheel.
2. Remove the cotter pin, the castle nut and the washer from under the tie-rod end pivot.
3. Apply the puller, tool No. 899540, and release the pivot from the steering arm. See fig.
   Do not attempt to strike off the pivot, since such action could damage both the pivot itself and other parts.
4. Remove the damaged rubber seal from the pivot and fit a new seal.
5. Refit the pivot in the steering arm, put the washer in place and tighten the castle nut with a torque of 25—36 ft-lb (3.5—5 kgm). Secure the nut with a new cotter pin.
6. Refit the wheel and lower the car to the floor.

CONTENTS

Front suspension

The upper control arms are provided with seats for the coil springs which are fitted between these seats and similar ones on the body. These latter seats are fitted with rubber bumpers, see fig., which act as stops and limit upward suspension travel. Rebound travel is limited by two rubber bumpers attached to the body under the upper control arms.

The lower control arms are interconnected by means of a stabilizer bar — see fig. The stabilizer bar is held to the body by two rubber-bushed mounting brackets under the floor of the engine compartment and to the two lower control arms by rubber-bushed bearings on the front of these arms.

The shock absorbers are of hydraulic, telescopic type. They are attached by means of rubber-bushed connections to the lower control arms at their bottom ends and to the body at their top ends.

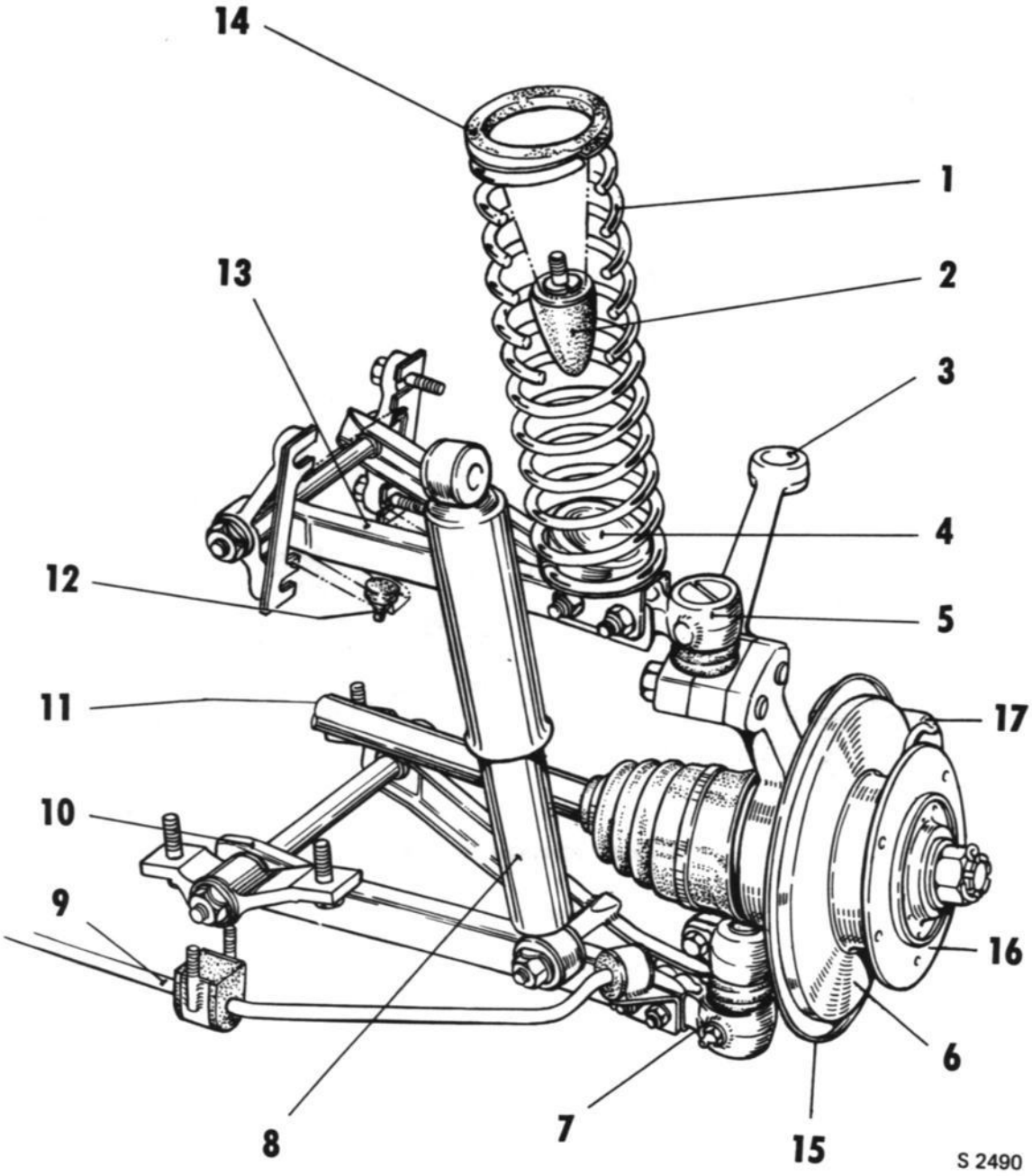

FRONT SUSPENSION, LEFT

1. Coil spring
2. Rubber bumper
3. Steering arm
4. Spring support
5. Upper ball joint
6. Brake disc
7. Lower ball joint
8. Shock absorber
9. Stabilizer bar
10. Lower control arm
11. Inner drive shaft
12. Rubber bumper
13. Upper control arm
14. Rubber spacer
15. Protective shield
16. Hub
17. Brake housing

Rear suspension

The rear axle is movably attached to the body at three points by means of rubber-bushed bearings. It comprises a unit consisting of a tube 2 with swept-back ends fitted with end plates to carry the press-fitted stub axles. The wheel hubs and brake drums are carried in ball bearings on the stub axles, while the backplates and appurtenant rear brakes are bolted to the outside of the end plates. At its center, the rear axle is attached to the body by means of a rubber-bushed bearing bracket 1. In addition, it is braced to the body at the sides through the medium of longitudinal side links, attached to both the body and the rear axle by means of rubber-bushed bearings.

The lower coil-spring seats are bolted to the stub axle extension on the inside of the rear-axle end plates. The upper seats for these springs are attached to the body by means of spring isolators 4 and combined with the rubber buffers 5 which limit upward travel of the rear axle and thus also of the wheels. Rebound wheel travel is restricted by the stop straps 6.

The rear shock absorbers for the Saab 95 are of arm type. They are bolted to the body and connected to the rear axle by links.

The rear shock absorbers 3 for the Saab 96 are of telescopic type. They are connected by means of rubber-bushed bearings to the body at the top and to the rear axle at the bottom.

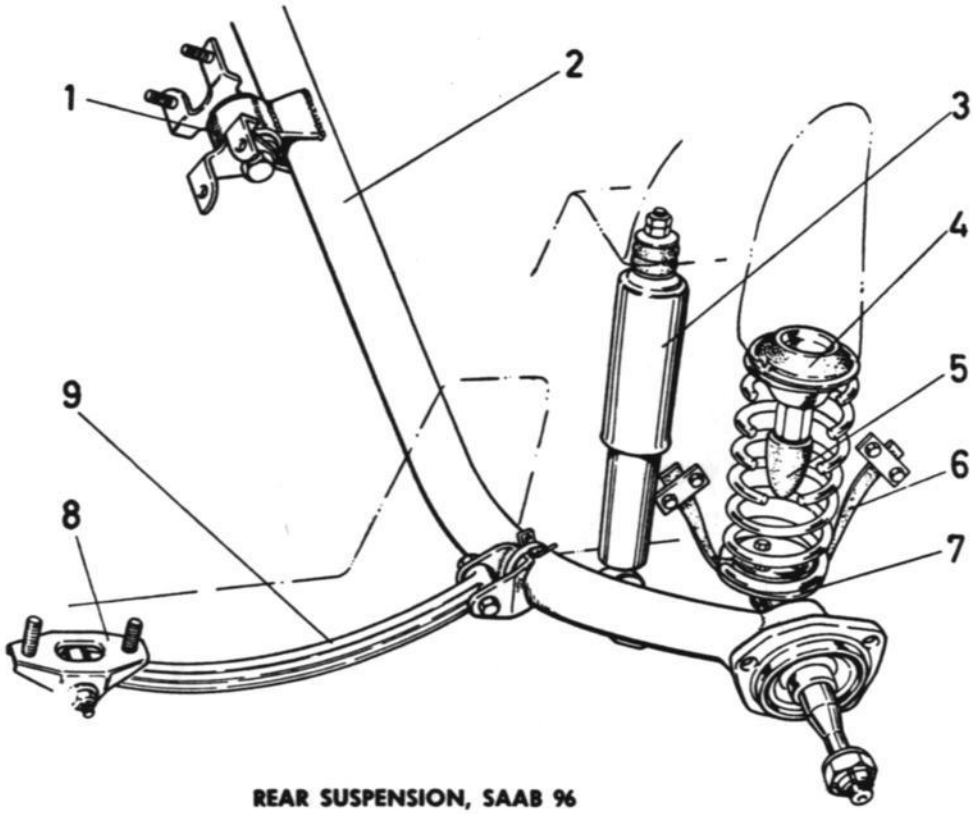

REAR SUSPENSION, SAAB 96

1. Center bearing
2. Rear axle tube
3. Shock absorber
4. Upper spring seat
5. Rubber bumper
6. Stop strap
7. Lower spring seat
8. Body bracket
9. Side link

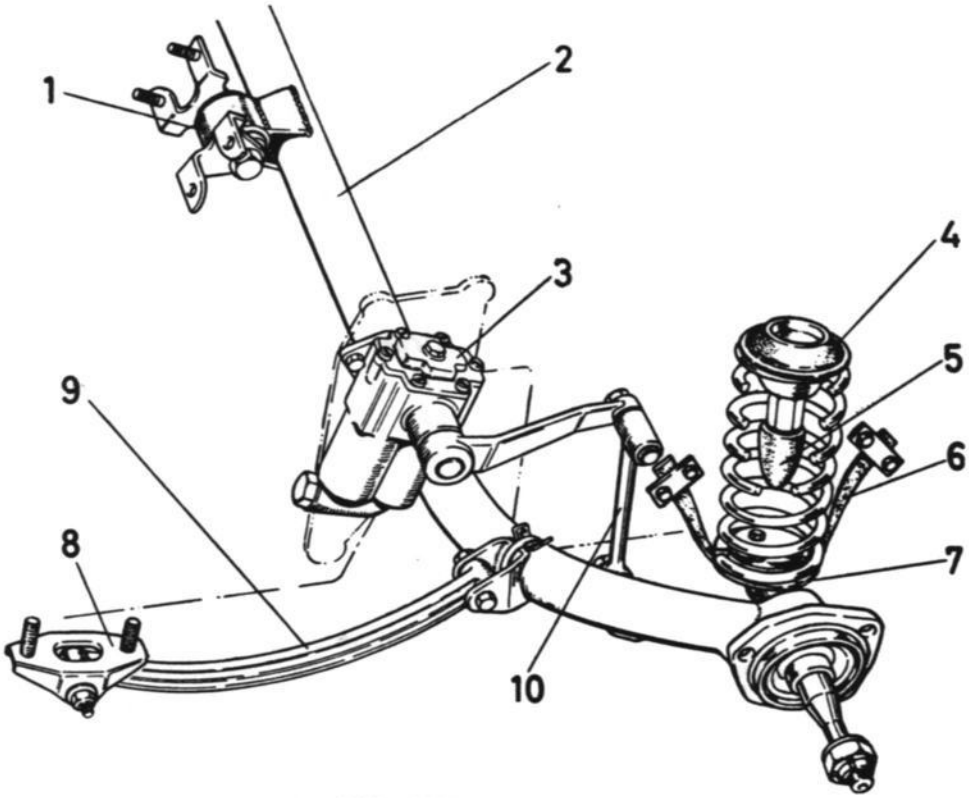

AXLE ASSEMBLY, SAAB 95

1. Center bearing
2. Rear axle tube
3. Shock absorber
4. Upper spring seat
5. Rubber bumper
6. Stop strap
7. Lower spring seat
8. Body bracket
9. Side link
10. Shock-absorber link

Wheels and hubs

Wheels

The dished wheels and wide-base rims are manufactured of pressed sheet steel and riveted or welded together to form and integral unit.

A pierced hole 1 in the rim accommodates the air valve, while five pressed and countersunk holes 2 in the wheel itself are intended for the wheel bolts. The hole 3 is used when adjusting the brakes, and when the wheels is assembled this hole should be located opposite the corresponding hole in the brake drum. The rim is also fitted with three pegs 4 to retain the hub cap. Four depressions in the circumference of the wheel form gaps between the wheel and the rim and are used in the application of snow chains. In addition to these gaps, there are twelve ventilation and lightening holes in the wheel.

Hubs

The wheel hubs also serve as brake drums on the rear wheels. The hubs are shaped to form an annular seal against the backplate, thus preventing water, sand and other foreign matter from entering the hubs and brakes.

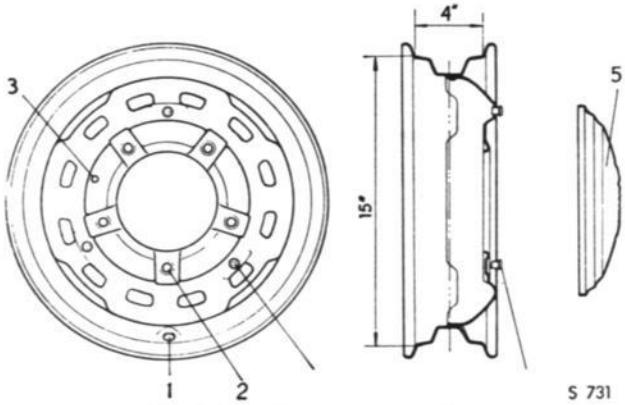

ROAD WHEEL AND HUB CAP

1. Valve hole
2. Wheel-bolt hole
3. Adjustment hole
4. Hub cap button
5. Hub cap

The hubs have five threaded holes for the wheel bolts and a guide ring for centering the wheel during the mounting.

Tires

The tires for SAAB V4 are tubeless and equipped with a balancing mark in the form of a colored circle. The marking shows the lighter side of the tire, and when the tire is fitted, the mark should be by the valve. The illustration below shows how the externally corrugated wall and bead of the tubeless tire seals against the inside of the rim (the bead seat).

As from model 1971 the tires are equipped with profile dept indicator: this means that when the thread pattern has worn down to a thickness of 1/16" (1.6 mm), unpatterned cross bars will appear on the tread. At this point the tire should be exchanged.

NOTE! Avoid fitting of tires of different type or make, or tires that are remarkably different worn, on the same axle.

BALANCING MARKS IN TIRES

SEAL OF TIRE TRIM

FRONT SPRINGS

Replacement of coil springs and rubber bumpers

All four wheels are fitted with coil springs. The front and rear springs must on no account be confused as the rear ones are shorter and much softer than the front ones. On later models, front coil springs of a new type are introduced. This springs are somewhat longer and harder than the springs previously used. The new ones are color-marked, see group 0, and may under no circumstances be installed together with springs of other design. The springs should always be changed in pairs.

Removal

1. Jack up the front part of the car and remove the wheel.
2. Insert a suitable gripping tool (a Polygrip or the like) in the spring and unscrew the rubber buffer from the rubber bumper, allowing it to drop down inside the spring. See also note below.

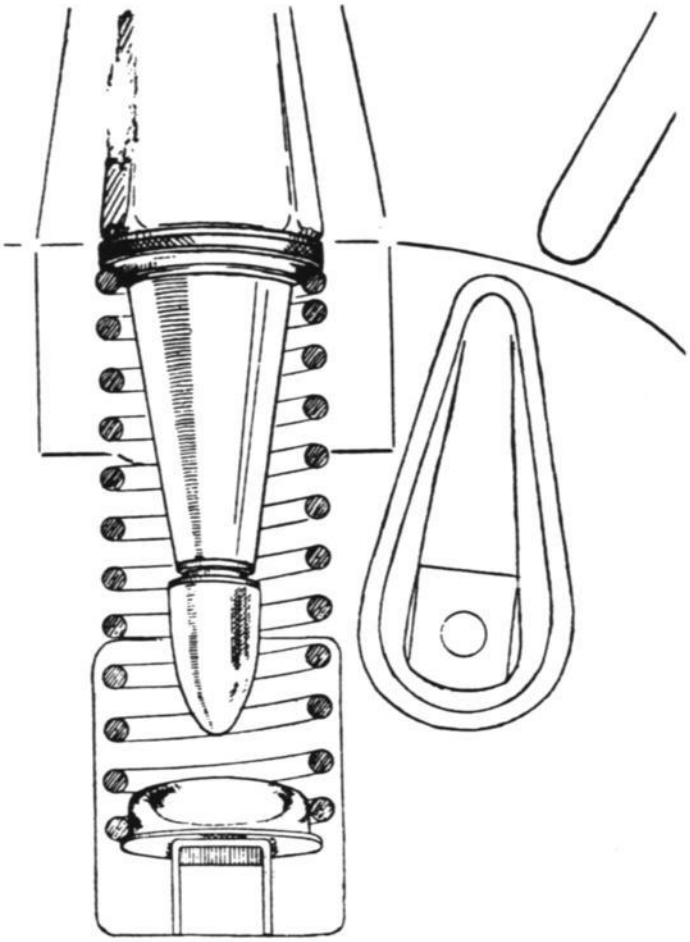

FRONT SPRING SEAT AND RUBBER BUMPER R. H. SIDE

NOTE

If the upper rubber bumper cannot be removed because the bolt has rusted on, the spring can be taken out by cutting off the lower bumper, thereby allowing the control arm to drop down towards the support plates.

3. Remove the shock absorber.
4. Compress the spring with the aid of the spring clamp, tool No. 784082. See fig.

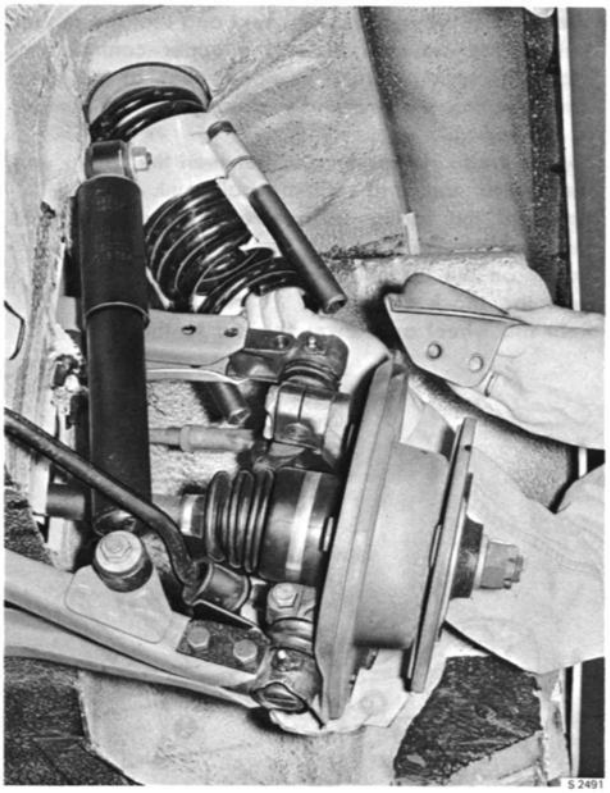

REMOVAL OF FRONT COIL SPRING WITH TOOL NO. 784082

WARNING!

Unconditionally, the spring clamp must be fitted with the retainers fitted in the way shown by the fig.

5. Back off and remove the two bolts holding the ball joint to the upper control arm, and remove the lower spring seat.

6. Remove the compressed spring.
7. Carefully examine the rubber sealing ring in the upper spring seat and fit a new one if necessary.
8. Examine the two rubber buffers under the upper control arm which form the rebound travel limit, and fit new ones if necessary.

Reassembly

1. Compress the coil spring with the spring compressor, tool No. 784081. See fig.
2. Apply the spring clamp, tool No. 784082, to the spring and withdraw the spring from the compressor.
3. Check that the rubber sealing ring and metal washer are fitted in the upper spring seat and that the rubber buffers are mounted under the upper control arm.
4. Place the spring against its upper seat, at the same time inserting the previously removed upper bumper in the spring.
5. Locate the lower spring seat between the spring and the control arm and refit the ball joint.
6. Back off the spring-clamp screws successively until this tool can be removed.
7. Screw on the upper rubber bumper.
8. Refit the shock absorber.
9. Refit the wheel and lower the car to the floor.

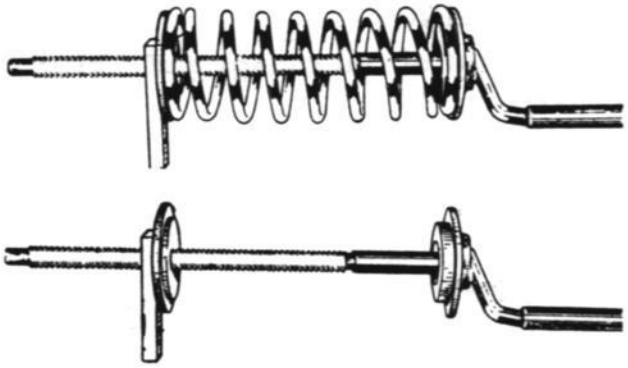

SPRING COMPRESSOR, TOOL NO. 784081, WITH AND WITHOUT SPRING

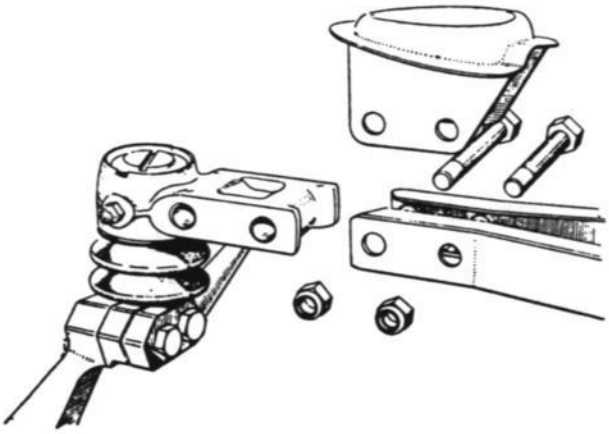

REMOVAL OF UPPER BALL JOINT AND LOWER SPRING SEAT

REAR SPRINGS AND RUBBER BUMPERS

Replacement of rear coil springs and/or rubber bumpers

Removal

1. Jack up one side of the car, applying the jack under the rear end of the sill.
2. Remove the rear wheel.
3. Unfasten the stop strap at its rear bracket and allow the axle to fall down, thus enabling the spring to be removed without the use of tools. On the Saab 95 first remove the shock-absorber link.
4. If the rubber buffer needs changing, unscrew it with a suitable pair of pliers, gripping the steel washer at the thick end.
5. Check the condition of the stop strap to see if a new one is required.

Reassembly

1. If the rubber buffer has been removed, screw a new one in place. Remember to fit the retaining washer between the buffer and its seat.
2. Refit the spring.
   Fit the spring with the unground end facing downwards and turn until it is correctly located in the lower spring seat.
3. If the stop strap has been removed, fix a new one to the front bracket, bearing in mind that the end should project 0.6 in. (15 mm) beyond the bracket.
4. Refit the wheel and lower the car to the floor.
5. Secure the stop strap at the rear end, again bearing in mind that the end of the strap should project 0.6 in (15 mm) beyond the bracket. See fig.

Replacement of stop strap

When fitting a new rear-axle stop strap, make sure that the ends project 0.6 in. (15 mm) beyond the brackets. See fig.

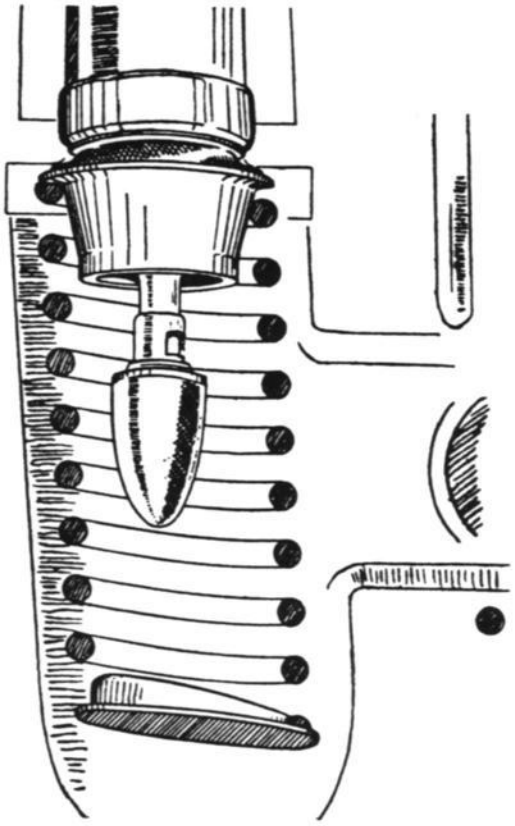

REAR COIL SPRING SEATS AND RUBBER BUMPERS

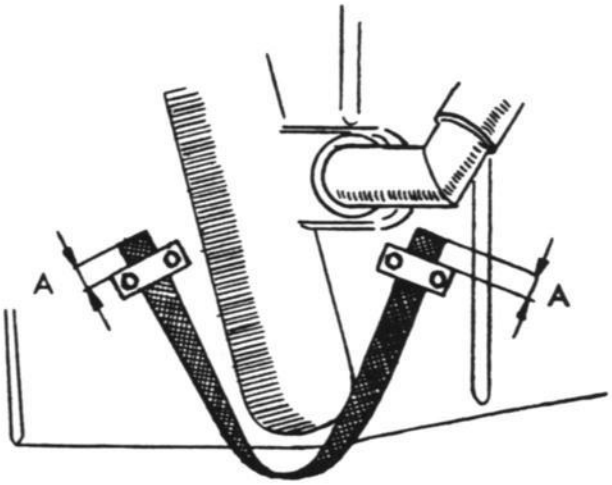

FITTING THE REAR-AXLE STOP STRAPS

A = Max. 0.1 in. (2.5 mm)

REAR AXLE

Removal of rear axle

1. Remove the rear seat and back cushions.
2. Jack up the rear part of the car and remove the wheels.
3. Disconnect the exhaust pipe and rear muffler from the floor and wheel house.
4. Disconnect the brake hoses from the body.
5. Unscrew the rear brackets for the stop straps and remove the coil springs, which can be done without the use of tools.
6. Hang the axle up provisionally in the stop straps.
7. Disconnect the shock absorbers. On the Saab 95, unfasten at the rear axle. For the Saab 96, disconnect at the upper connection.
8. Detach the brake-cable clamps from the shaft and the wire connections from the rear-brake levers.
9. Disconnect the rear-axle bearing from the body.
10. Unfasten the side-link body brackets. The nuts are accessible from inside the car under the rear seat cushion.
11. Unfasten the stop straps again and remove the entire rear-axle assembly.

Installation of rear axle

Clean all parts thoroughly and, after a careful check, renew all worn or damaged parts. Installation is carried out in the reverse order to removal. Bear in mind, however, that the rubber-bushed bearings must be fitted in such a way that no stresses are incurred when the car is resting on the wheels, i.e. such bearings must not be tightened at the axle and body brackets until the car has been lowered to the floor and is unladen.
The ends of the stop straps should project 0.6 in. (15 mm) beyond the brackets.

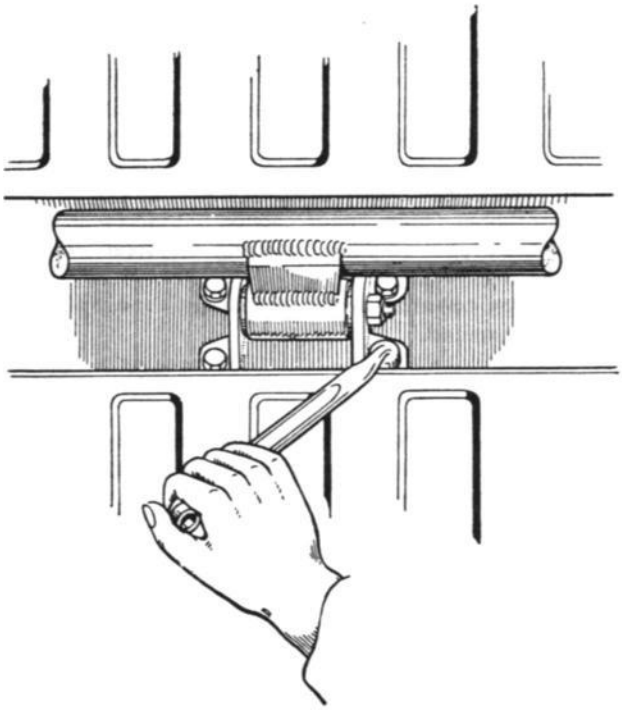

DISCONNECTING THE REAR-AXLE CENTER BEARING BRACKET

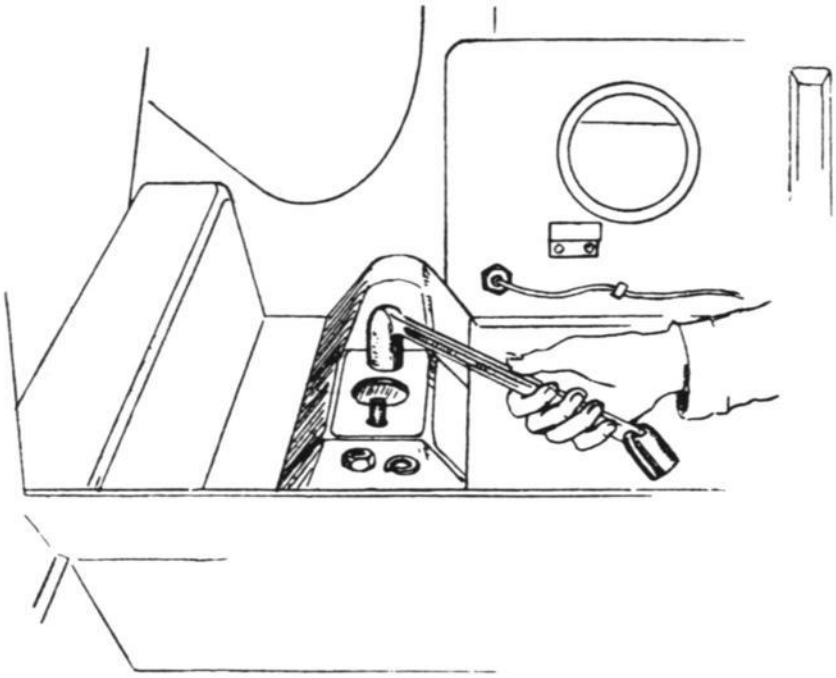

NUTS FOR SIDE-STAY BODY BRACKET, UNDER THE REAR SEAT

NOTE

1. Take pains to protect the rubber bushings against contact with rubber solvents such as grease, gasoline, etc.
2. If a rubber bushing has rusted on, it must be rejected, but great care must be taken when removing it to avoid damage to shafts and stays. After removal of the bushing, clean the bearing surfaces with very fine emery cloth.
3. Elastic retaining nuts which have lost their grip after repeated backing off and retightening must be rejected and replaced by new ones.

CENTER BEARING

Replacement of rubber bushings in rear-axle center bearing

If the bushing in the center bearing is to be changed, the entire rear-axle assembly should be removed. It is, however, possible to change the bushing while the axle remains in place.

Replacement of bushing without removing the rear axle

1. Jack up the rear part of the car.
2. Disconnect the brackets for the rear muffler and exhaust pipe from the wheel house and floor respectively.
3. Back off and remove the bolt through the center bearing.
4. Pull the rear axle down and place an assembly bar across the tunnel between the body and the axle on either side of the center bearing.
5. Apply tool No. 784073 and remove the rubber bushing.
6. Drive a new bushing in, using the same tool. Locate the bushing in the center of the bearing.
7. Refit the center bearing, but do not tighten the nut until after the car has been lowered to the floor.
8. Refit the rear muffler and exhaust pipe to their brackets on the wheel house and floor respectively.
9. Lower the car to the floor.
10. Tighten the nut on the rear-axle center-bearing bolt.

Replacement of bushing on a removed axle

Change the bushing with the same tools and in the same manner as described above.

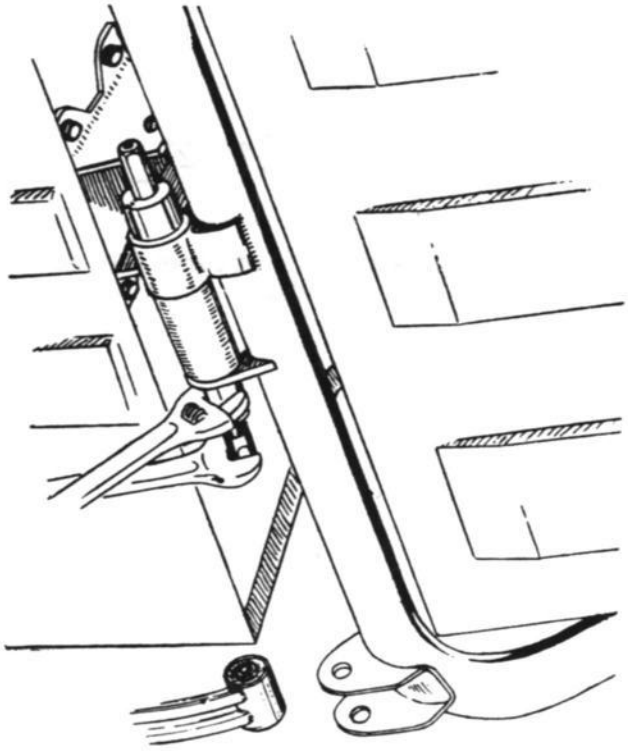

EXTRACTION AND INSERTION OF CENTER-BEARING RUBBER BUSHING WITHOUT REMOVING THE REAR-AXLE ASSEMBLY

SIDE LINKS

Replacement of side-link rubber bushings

1. Disconnect the links from the brackets on the rear axle.
2. Detach the body brackets from the links.
3. The bushings are best removed by gently heating the link bearing sleeves with a burner flame or other suitable source of heat, whereupon the bushings may be eased off with the driver, tool No. 784076, a special tool which is also used to fit the new bushings.
4. Refit the body brackets to the links, noting that the angle between the link and the bracket should be 4° (see fig.) when the bushing has been tightened.
5. Refit the links to the rear axle but do not tighten the nuts. These nuts must never be tightened until the car is resting on the wheels. Insert the bolts from the outside towards the center bearing.
6. Lower the car to the floor and tighten the nuts on the side-link rear bearing brackets.
   Check the elastic retaining nuts for fatigue, and fit new ones if necessary.

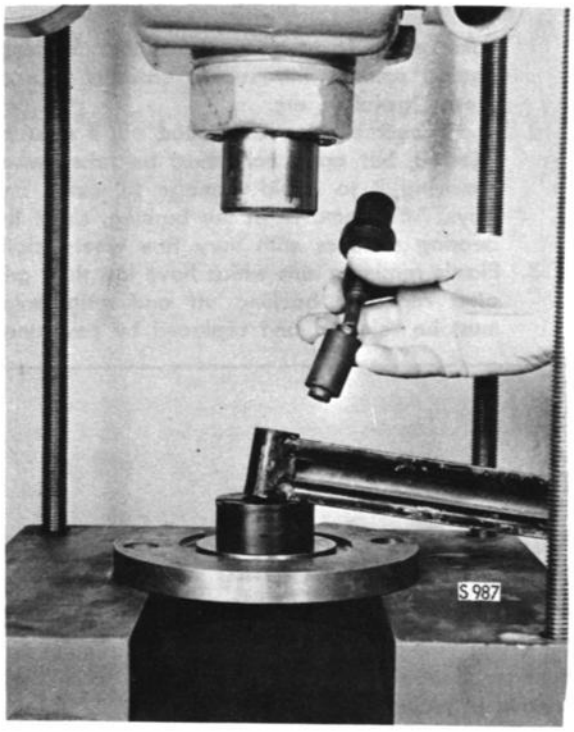

PRESSING IN RUBBER BUSHINGS, USING TOOL NO. 784076

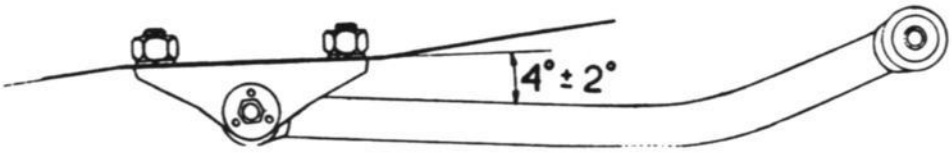

CORRECT ANGLE BETWEEN SIDE LINK AND BODY BRACKET

SHOCK ABSORBERS

General

Defective shock absorbers must be rejected, and new ones fitted. This is a matter of the utmost importance, since the shock absorbers have a pronounced effect on the roadability and steering qualities of the car.

FRONT SHOCK ABSORBERS

Removal

1. Jack upp the car and remove the wheel.
2. Remove the shock absorbers, collecting the washers and rubber items.

Reassembly

NOTE

Before reassembling, provide new rubber items in place of any defective ones.
When a shock absorber is to be refitted, be sure to use only genuine rubber bushings at the upper and lower seats, as the use of wrong parts may give rise to noise. Before a shock absorber is fitted, any air in it must be expelled. To do this, hold the shock absorber in the same position as it has on the car and pump it up and down several full strokes. Now fit the shock absorber to the several full strokes. Now fit the shock absorber to the car immediately – if it is put down, air may re-enter its valve system

1. Put on the rubber bushings and washers and refit the shock absorber on the car. Smear the pin threads with grease before screwing on the nuts. Tighten the nuts hard.
2. Refit the wheel and lower the car to the floor.

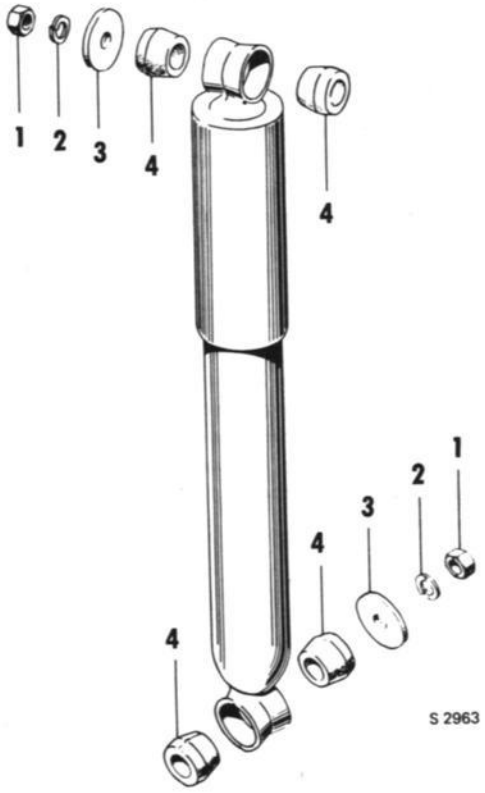

FRONT SHOCK ABSORBERS AND CONNECTING PARTS

1. Nut
2. Spring washer
3. Washer
4. Rubber bushing

REAR SHOCK ABSORBERS

Saab 95

Removal

1. Jack up the car and remove the wheel.
2. Disconnect the shock absorber from the body and the rear axle.
3. Remove the shock absorber, collecting the washers and rubber items.

Reassembly

Fit new rubber items in place of any defective ones. Always use genuine replacement parts. Refit the shock absorber and its connecting parts, smear the pin threads with grease and tighten the nuts hard. The connecting parts belonging to the shock absorber are shown in the figure below.

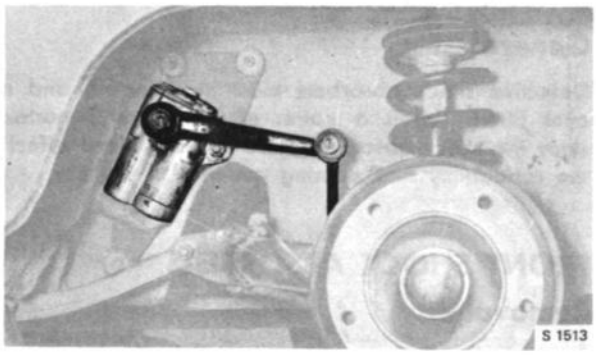

REAR SHOCK ABSORBER, SAAB 95

Topping up shock absorbers

The rear shock absorbers on the Saab 95 must be inspected every 12.000 miles (20.000 km) and topped up as necessary with shock-absorber fluid of good quality.

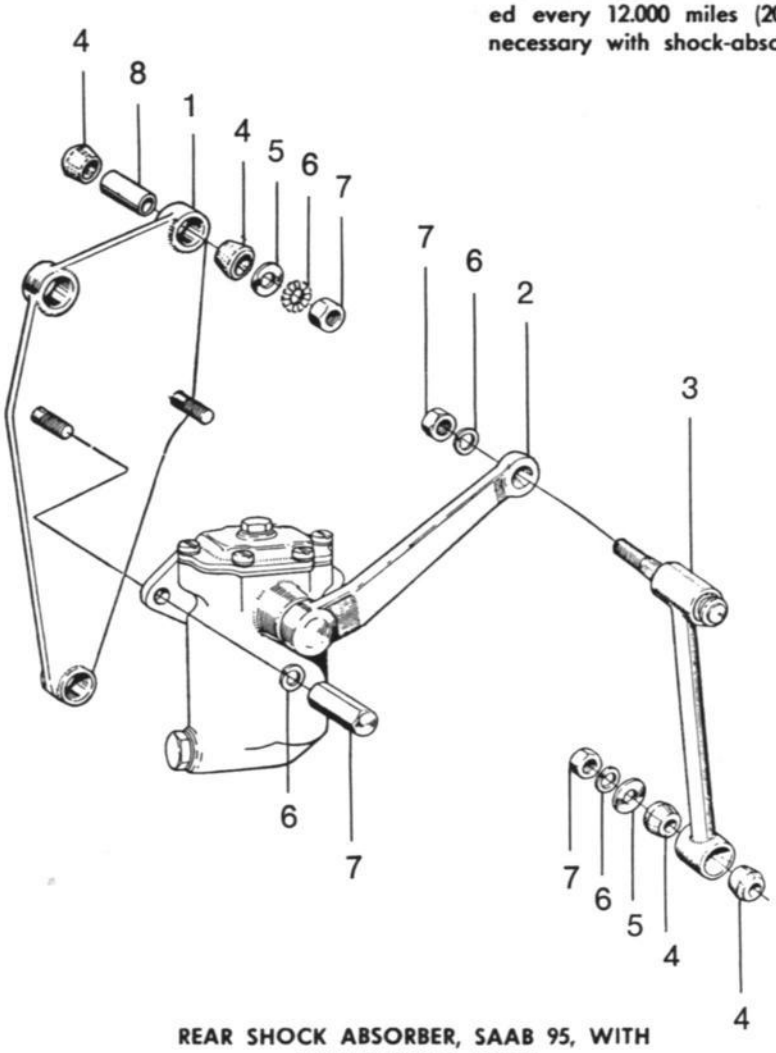

REAR SHOCK ABSORBER, SAAB 95, WITH CONNECTING PARTS

1. Bracket
2. Shock absorber
3. Shock absorber link
4. Rubber bushing
5. Washer
6. Lock washer
7. Nut
8. Spacer tube

REAR SHOCK ABSORBERS

Saab 96

Removal

1. Jack up the car and remove the wheel.
2. Disconnect the shock absorber from its upper and lower brackets.
3. Remove the shock absorber, collecting the washers and rubber items.

Reassembly

Install rubber bushings and washers, and fit the shock absorber to the car – see fig. Make sure that the rubber bushings in the upper connection are correctly located: then ease the upper bushing flange into the hole in the body so that the shock absorber is properly centered in the hole. Negligence in this respect may result in noise. Smear the pin threads with grease before screwing on the nuts. Tighten the nuts hard.

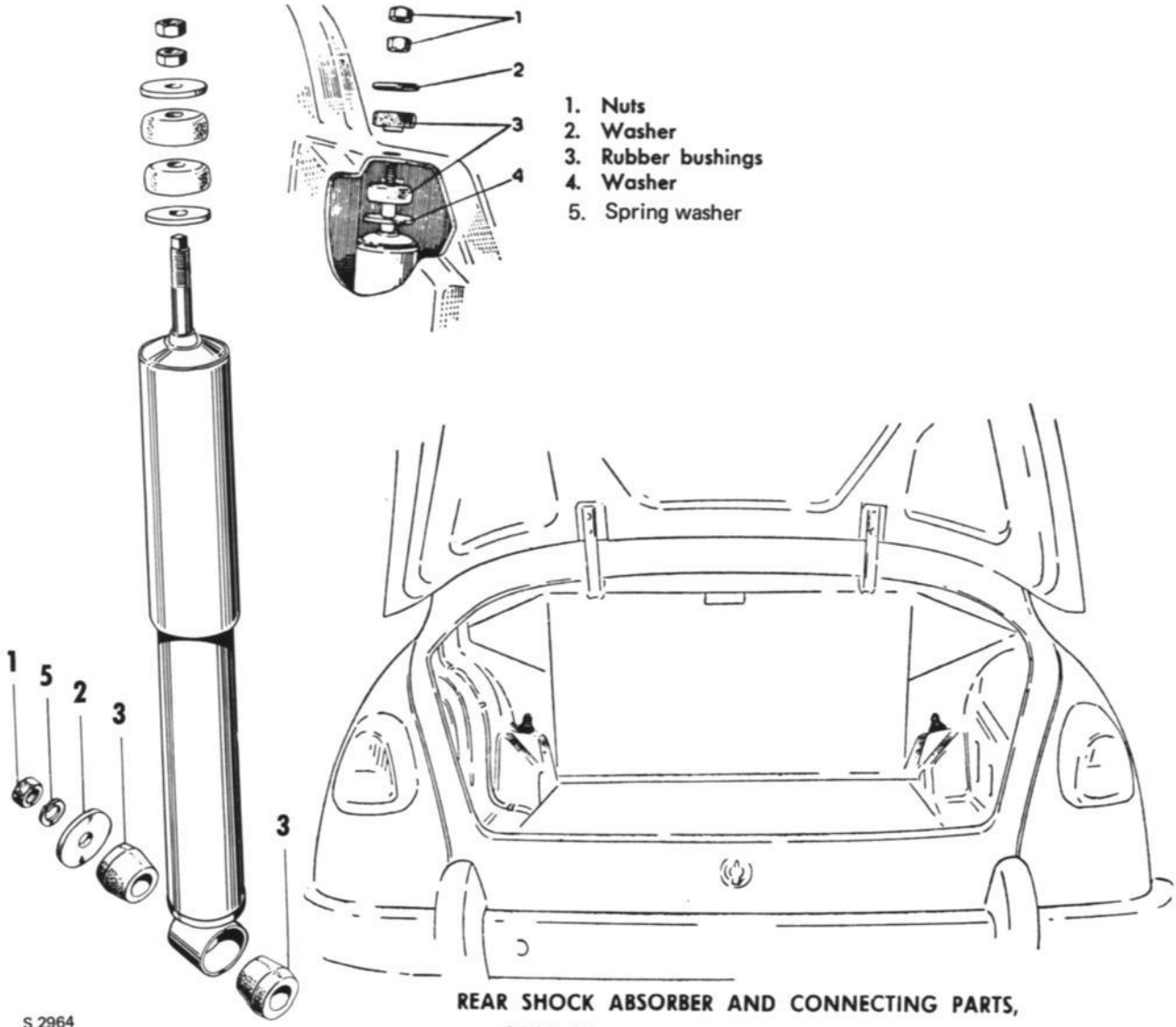

REAR SHOCK ABSORBER AND CONNECTING PARTS, SAAB 96

STABILIZER BAR

Replacement of stabilizer bar

1. Jack up the front part of the car and remove both front wheels.
2. Remove the stabilizer bar by disconnecting its mounting brackets from the body. The nuts are accessible from inside the engine compartment. Detach the bar from both body, end bearings and brackets, then remove the bar towards the right.
3. Pass the new stabilizer bar in from the right and secure it to the body with its bearings.
4. Refit the two end bearings to the control arms.
5. Refit the wheels and lower the car to the floor.

Replacement of rubber bushings on stabilizer bar

If renewal of the rubber bushings on the stabilizer bar is called for, this is best done without removing the bar itself from the car.

1. Jack up the front part of the car and remove both front wheels.
2. Back off and remove the two bolts on either side that hold the ball joints and stabilizer-bar brackets to the lower control arm.
3. Detach the stabilizer-bar brackets from the control arms.
4. Turn the stabilizer bar downwards and remove its two end bearings, in which the rubber bushings are pressed.
5. Back off the nuts and remove one stabilizer-bar mounting bracket from the body. These nuts are accessible from inside the engine compartment.
6. Fit a new bushing in the mounting bracket and refit the bracket.
7. Repeat the procedure according to points 5 and 6 above with the opposite mounting bracket.
8. Fit new rubber bushings in both end bearings.
9. Refit the two end bearings on the stabilizer bar.
10. Reconnect the stabilizer-bar end bearings and ball joints to the lower control arms and tighten up the bolts. Do not forget the stiffener on the rear of the control arm.
11. Refit the wheels and lower the car to the floor.

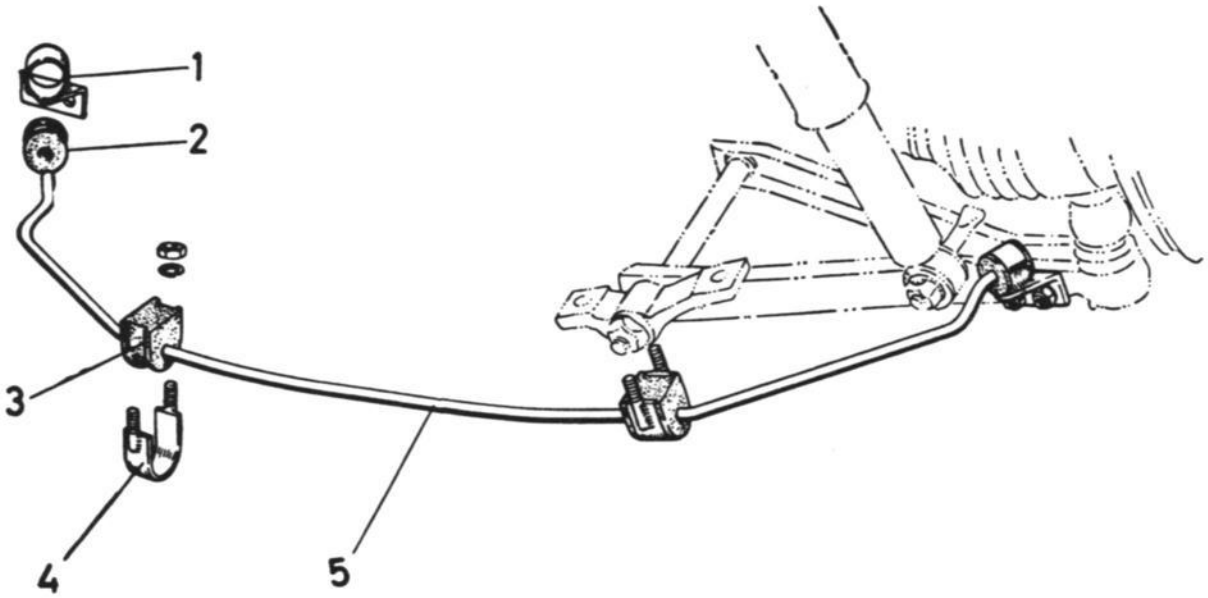

STABILIZER BAR AND BEARINGS

1. Bracket, control arm
2. Rubber bushing
3. Rubber bushing
4. Bracket, body
5. Stabilizer bar

WHEELS

Adjusting and repairing wheels.

Wheels may be damaged in collisions or if the car runs off the road or is driven on underinflated tires. As the tubeless tires seal direct against the wheel rims, air will leak out if the rim is deformed or otherwise damaged. If a leak occurs due to rim deformation, the tire should be taken off so that the wheel can be inspected and adjusted if necessary. If the rim is rusty at the bead seating, the rust must be removed; this can suitably be done with a steel brush or a pad of steel wool. If rust has pitted the rim, a file should be used. Any minor pits remaining after adjustment should be coated with thick rubber solution; the tire is then coated in the same way and mounted on the wheel before the solution dries.

> NOTE
> Check before mounting the tire that the rim is not out-of-round or out-of-true.

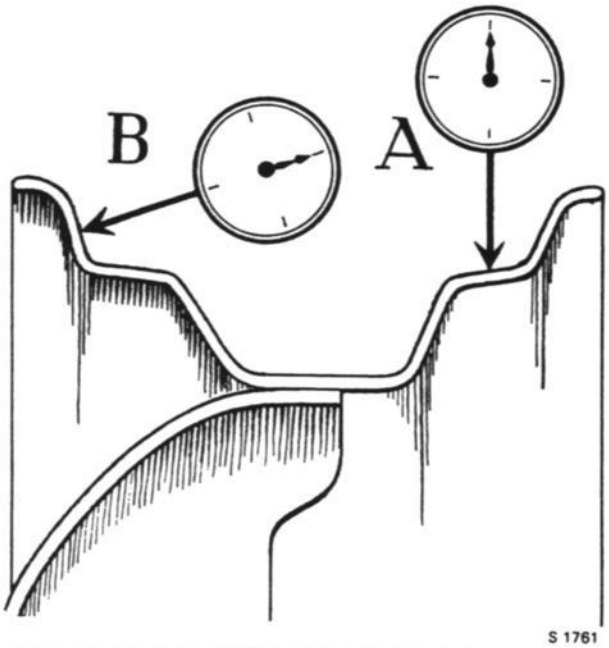

MEASUREMENT POINTS ON THE WHEEL RIM

On a correctly journaled rotating rim, the difference between the highest and lowest point measured at A (see illustration) must not exceed 0.047" (1.2 mm). The side throw B (see illustration) should be measured in the same way and must not exceed 0.047" (1.2 mm).
When these measurements are made, the rim should be mounted in the usual way, either on a wheel hub or in a special apparatus, so that the rim can be rotated.

Tire maintenance

The working life of a tire depends very much on the care it receives and the conditions under which it has to work. Some of the factors affecting tire wear are listed below.

1. Inflation pressure. It is important to maintain the correct inflation pressure and to adjust the pressure according to load. For correct tire pressures, see under Specifications, Chapter 0.

Correct Overinflated Underinflated

TREAD CONTACT WITH ROADWAY

2. Wheel balancing is necessary to avoid vibration and consequent wear. Wheels must be balanced both statically and dynamically.
3. Wheel alignment. Faulty alignment fo the wheels can cause heavy wear on the tires.
4. Speed. Tire mileage diminishes sharply with rising speed, mainly due to the greater friction heat generated.
5. Engine power. Powerful engines give rapid acceleration and high speed, which in turn demand powerful brakes. This contributes to faster wear on the tires.
6. Road surface. Dry roads offering a good grip for the tires cause a great deal of wear.
7. Manner of driving. The temperament of the driver may weigh more heavily than any other factor. If the acceleration and braking resources of the car are regularly utilized to the limit, this will quickly wear down the tires.

A statically balanced wheel should be able to come to rest in any position when suspended and free to rotate.
A dynamically balanced wheel should rotate in a plane perpendicular to the axis of rotation, i.e. it should have no tendency to skew during rotation.
The balancing operation should not be performed on new wheels, but only after some 600–900 miles (1.000–1.500 km) motoring; this is to give the tire time to "shake down" on the rim.
Wheels need rebalancing after long mileage because tire wear alters the distribution of weight.

NOTE
When a wheel spinner is used, the speedometer reading must not exceed 40 mph (70 km/h).

HUBS

General

The hub and brake drum on the rear wheels are made as an integral casting, while the front wheels feature a special hub.

After considerable mileage, especially if lubrication has not been satisfactory, the wheel bearings may become worn and play will develop. Since this has a highly detrimental effect on the steering characteristics, the bearings must be renewed. Bearing play is easily checked if the car is jacked up. Hold the wheel at top and bottom and try to wiggle it: this will immediately reveal any unwanted play. If the play, measured at the edge of the rim, exceeds 0.08 in. (2 mm), the bearing must be changed. Do not subject the bearings to blows under any circumstances, since such treatment could easily damage them. In addition to the tools mentioned in the instructions, an arbor press will be needed for removal and installation of wheel bearings.

Removal of hub

1. Before starting work, make sure that the car is thoroughly cleaned under the fenders. Scrape off all dirt that might loosen and enter the bearings.
2. Remove the hub cap and back off the wheel bolts.
3. When the rear hub is involved, remove the dust cap, followed by the cotter pin, the castle nut and the washer.
4. Jack up the front or rear part of the car, as appropriate.
5. Take off the wheel.
6. If dealing with the rear wheel hub, check that the handbrake is released and back off the brake adjusting bolts. Remove the brake housing and hang it on the wheel housing in such a way that the brake hose not be damaged. Remove the cotter pin, crown nut and washer. Apply the hub puller — see fig. — and secure it with the ordinary wheels bolts.
7. Pull off the hub.
8. Prevent sand and other foreign matter from entering the hub seals and bearings by covering these items over with clean clothes.

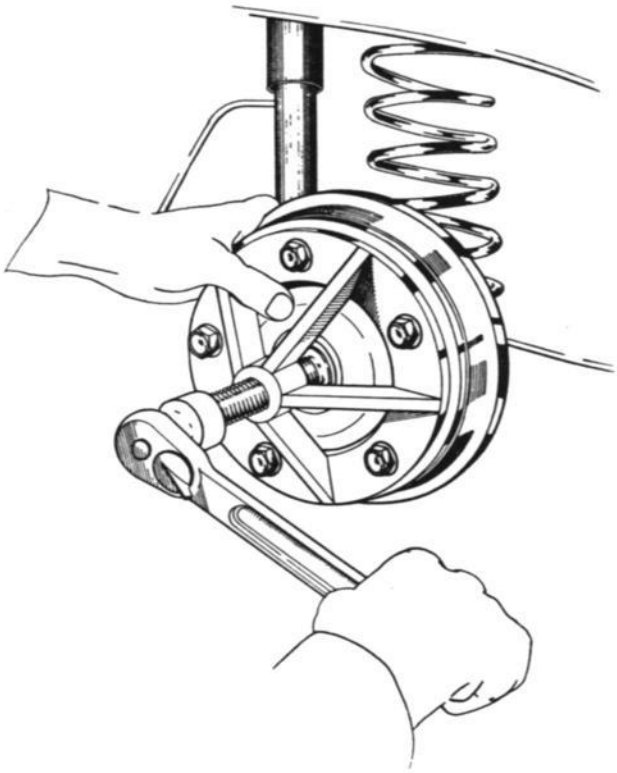

HUB PULLER

Installation of hub

Clean the hub thoroughly and make sure that there is no dirt in the shaft seal.

1. Before installing, grease the tongue and sliding surface of the shaft seal.
2. Fit the hub on the shaft. Put on the washer and tighten the castle nut using a torque of 130 ft-lb (18 kpm) for the front hub and 68 ft-lb (9.0 kpm for the rear hub on front wheel hubs: refit the brake housing.
3. Secure the castle nut with the cotter pin. Refit the wheel and the hub cap.

Front wheel hub

The front wheel hub is splined to the outer drive shaft and secured by means of a castle nut and cotter pin. The sliding surface on the inside of the hub must be well protected against scratches and blow marks when the hub is removed. It must seal properly against the shaft seal, and its rounded edge towards the end face must also be protected. If the sliding surface is scratched or otherwise damaged it must be trimmed and polished. This job should be done in a lathe, but great pains must be taken to avoid appreciable reduction of the diameter of the sliding surface.

Due attention of these precautionary measures is of the utmost importance, as neglect in this respect results in rapid wear of the shaft seal: grease from the ball bearings may enter the wheel hub and be carried to the brake drum where it will ruin the brake linings. Instructions for replacement of front-wheel bearings and seal are given in chapter 6.

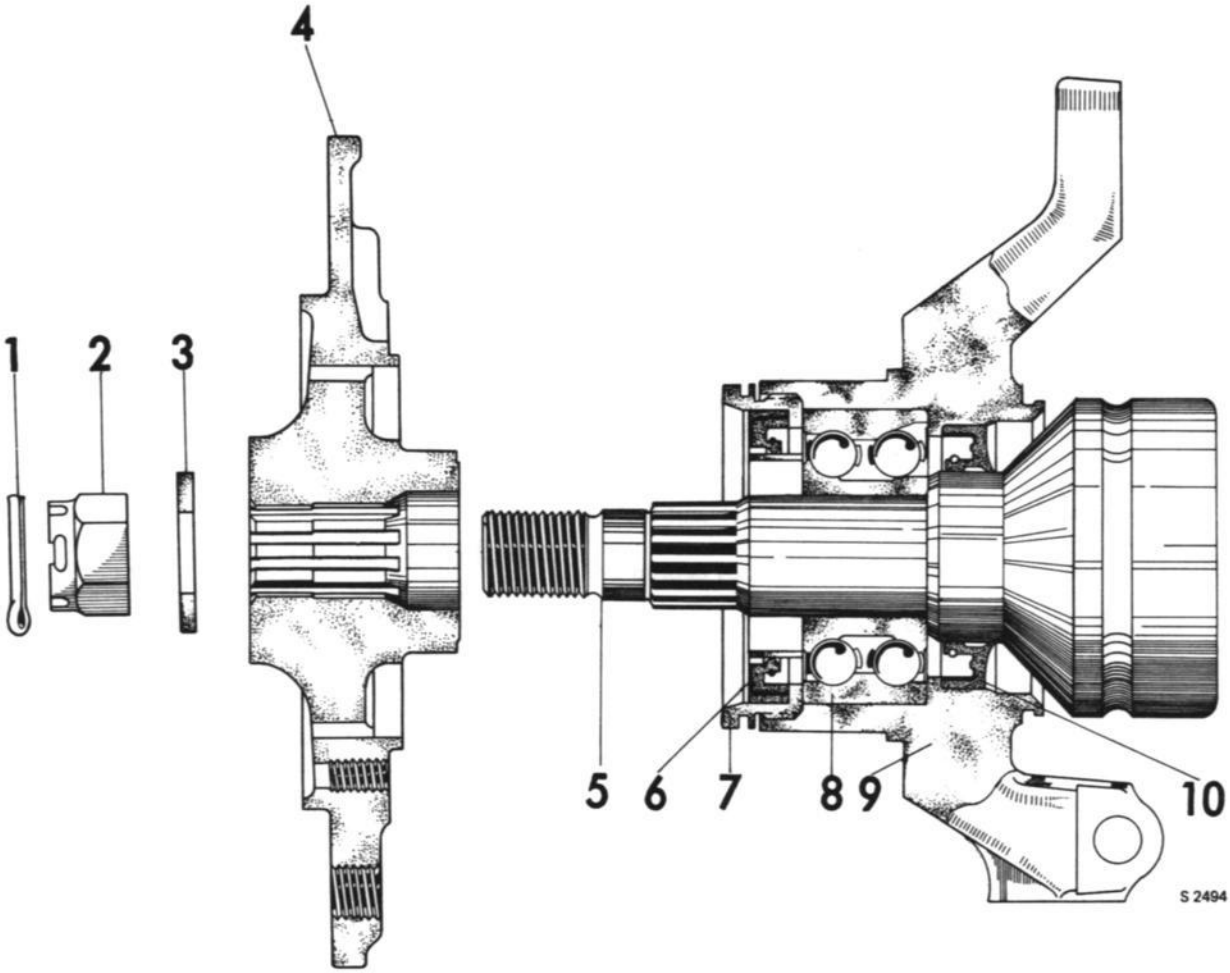

FRONT WHEEL HUB

1. Cotter pin
2. Castle nut
3. Washer
4. Hub, Monte Carlo, SAAB 95 and 96
5. Drive shaft
6. Shaft seal
7. Nut
8. Ball bearing
9. Steering knuckle housing
10. Sealing ring

Rear wheel hub

Ball bearings are fitted in the rear wheel hubs. These, together with the shaft seal, accompany the hub when it is removed.

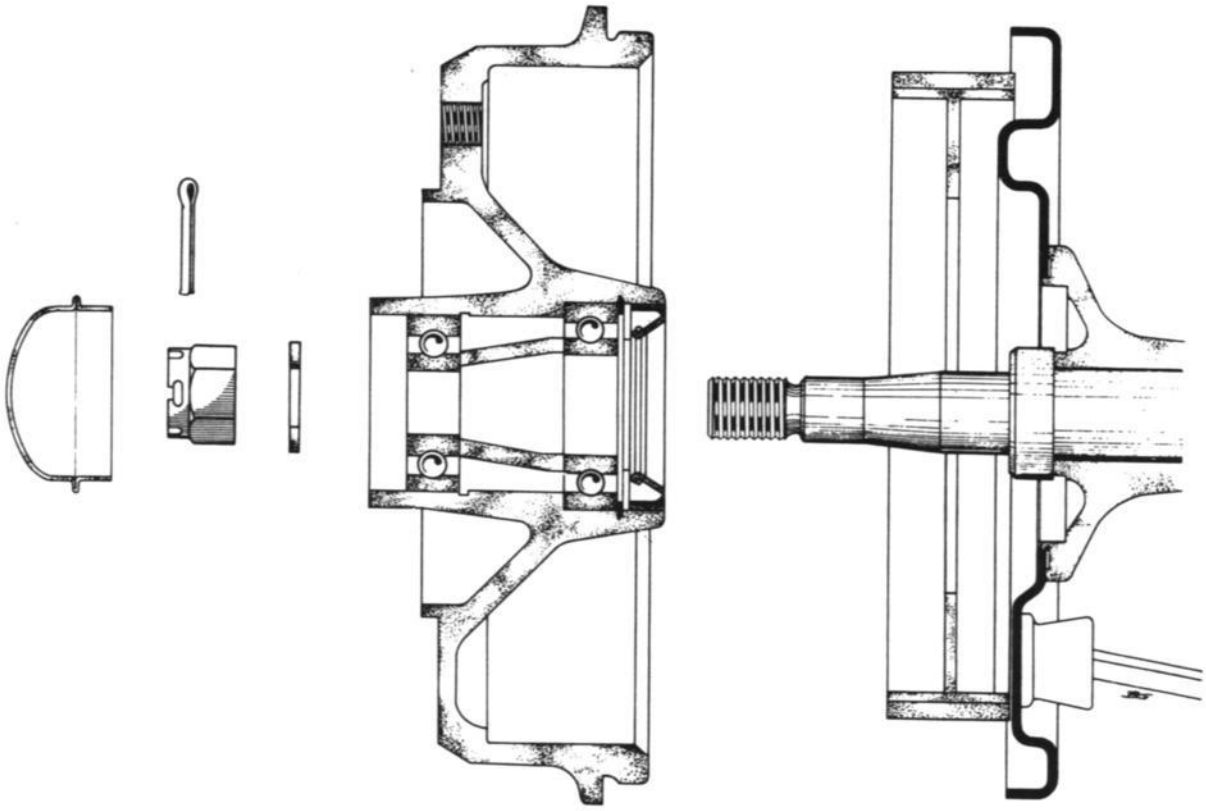

REAR WHEEL HUB

S 2495

Replacement of ball bearing in rear wheel hub

Changing the front wheel bearings, see group 6.

Removal

Before starting work, make sure that the car is thoroughly cleaned under the fenders. Scrape off all dirt that might loosen and enter the bearings.

1. Jack up the car and remove the wheel.
2. Remove the dust cap, using a screwdriver.
3. Remove the cotter pin, castle nut and washer.
4. Check that the handbrake is fully released.
5. Pull off the brake drum, using puller No. 784002 See fig.

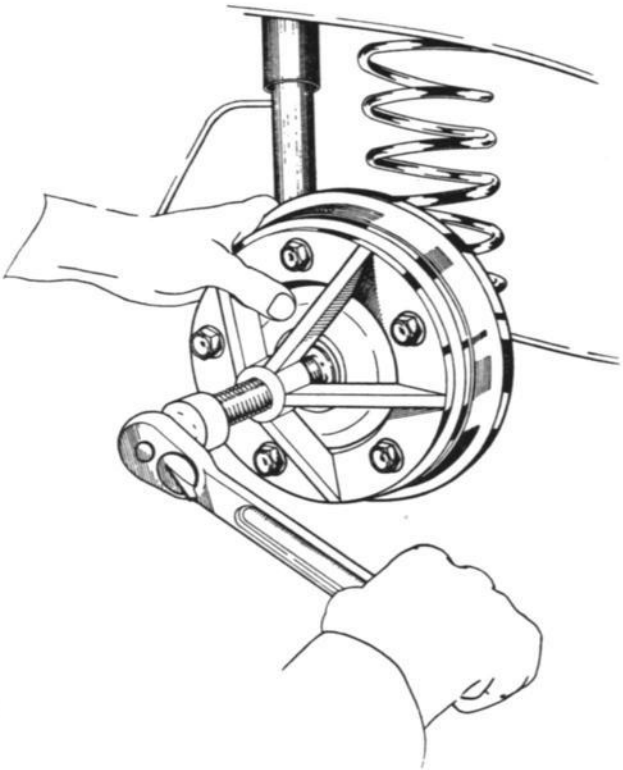

HUB PULLER

6. Remove the shaft seal and the circlip.
7. From outside the brake drum, press out both bearings.

Installation

Clean all the components thoroughly, and provide new parts in place of any worn or damaged ones. Fit a new shaft seal.

1. Pack the ball bearings with SAAB Special chassis grease. See the chapter on "Lubrication".
2. Press in the small bearing 0.5 in. (12 mm) from the edge, using tool No. 784033. See fig.
3. Turn the hub over and fill the brake drum with enough SAAB Special chassis grease to occupy about half the space between the bearings. Note: if too much grease is applied, it may ooze out and ruin the brake linings.
4. Insert the spacer sleeve and press in the big bearing, using tool No. 784032. See fig.
5. Refit the circlip.

> NOTE
>
> The circlip is of a special type and must always be mounted as shown in the figure.

6. Fit a new shaft seal.
7. Check that the axle-stub sliding surface for the seal is flawless. If damaged, adjust it and polish with a very fine emery cloth. Grease the sliding surface with SAAB Special chassis grease.
8. Refit the brake drum and tighten the castle nut with a torque of 65 ft-lb (9 kgm). Secure with the cotter pin.
9. Refit the dust cap, using tool No. 784036.
10. Refit the wheel and lower the car to the floor.

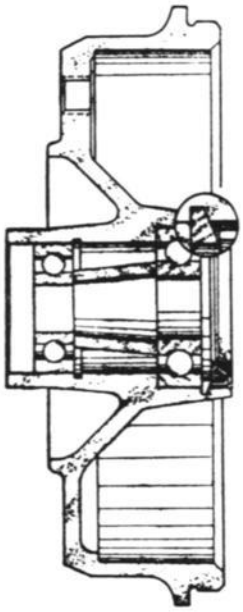

COMPONENTS OF REAR WHEEL BEARINGS

1. Brake drum
2. Outer bearing
3. Spacer sleeve
4. Inner bearing
5. Lock ring
6. Sealing ring

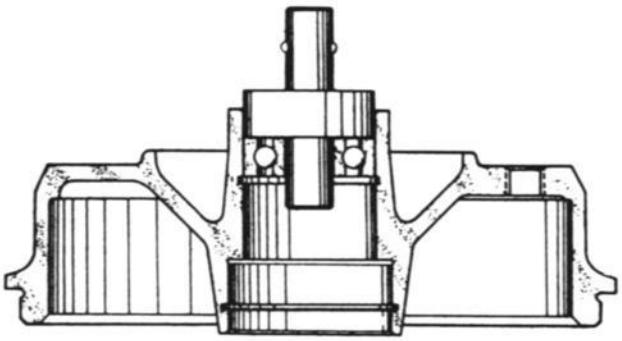

PRESSING IN THE SMALL BEARING WITH TOOL NO. 784033

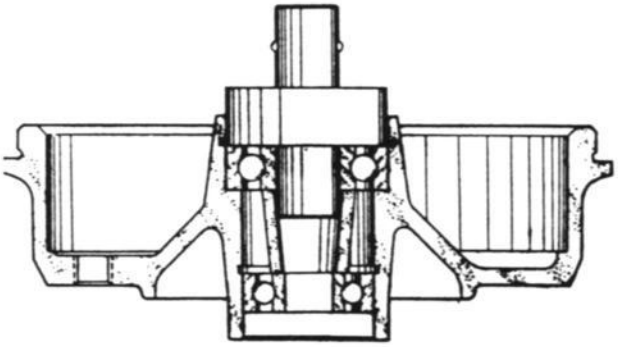

PRESSING IN THE BIG BEARING WITH TOOL NO. 784032

CONTENTS

DESCRIPTION

Body assembly

The SAAB 95 and 96 have bodies of unit construction, i.e. without a separate chassis frame. Fenders, doors, hood and luggage-compartment lid are removable. The body is composed of a relatively small number of pressed steel parts which are joined together by spot-welded or tack-welded overlapping seams. In addition, all vital junctions are solid-welded. The illustrations below show those parts of the body which together form the welded body assembly.

As fas as the body is concerned, the Monte Carlo is practically identical with the SAAB 96, the only essential difference being that the Monte Carlo has two moldings low down along the sides instead of the fender moldings on the SAAB 96.

As from model 1971 there is a moulding with a SAAB emblem on the front fender. The moulding runs along the door and side valance to the rear fender where it ends at a stone guard.

The Saab 95 differs from the Saab 96 in that the rear end and the roof are different.

The roof panel is a single pressed steel part, extending from the dash panel to the leading edge of the luggage-compartment lid. Pressed reinforcement frames are fitted round the windshield and rear window. Tubular reinforcement is provided in the windshield pillars, while steel-section roof rails add rigidity to the sides of the roof.

The cowl section of the roof panel terminates in front of the windshield with a vertical reinforcement panel which, together with the dash panel and the windshield reinforcement frame, forms a closed compartment. The space thus enclosed serves as a collecting chamber for ventilation air, which flows in through the opening in the upper side of the chamber and which can be admitted to the car either through a flap on the righthand side of the dash-panel or through the fresh-air heater.

The floor consists of a single smooth panel, with longitudinal channels affording the necessary stiffening. At the sides, rigidity is provided by the sills, to which the jack supports are welded. At the front, the center floor adjoins the dash panel, and at the rear the rear-axle tunnel. The engine-compartment floor pan is joined to the center floor at the dash panel, and the luggage-compartment floor pan behind the rear-axle tunnel.

The wheel-house walls are of pressed steel, channeled for reinforcement. The two front wheel houses are pierced for the control arms and tie-rods, as well as to allow evacuation of the current of air passing through the radiator. Some of the air outlets are fitted with gills. The brackets for the front control arms are welded to the inside of the wheel-house walls and to the engine-compartment floor.

One of the rear wheel-house walls is pierced for the fuel filler pipe, the other being fitted with a bracket for fitting the rear muffler. The upper spring seats and shock-absorber brackets are welded to the wheel houses at both front and rear.

The luggage compartment of the SAAB 96 and Monte Carlo comprises the rearmost part of the body and is limited at the front end by the removable back cushion of the rear seat. The compartment floor consists of a sheet of plywood, divided into two parts, under which the fuel tank and spare wheel are housed. The luggage-compartment lid is carried on two hinges and fitted with a counterbalanced check device.

As from model 1971 the cars are provided with four towing eyes, two at the front and two at the rear. The towing eyes are welded to the front and rear wheel housing respectively.

Body insulation

Passenger and rear compartments are internally insulated with waffle-pattern paperboard.

A layer of insulation compound has also been sprayed on the underside of the body assembly and inside the wheelhouses. This compound affords protection against flying stones and corrosion, besides having certain sound absorbing properties. When cleaning the car, never scrape the inside of the wheelhouses.

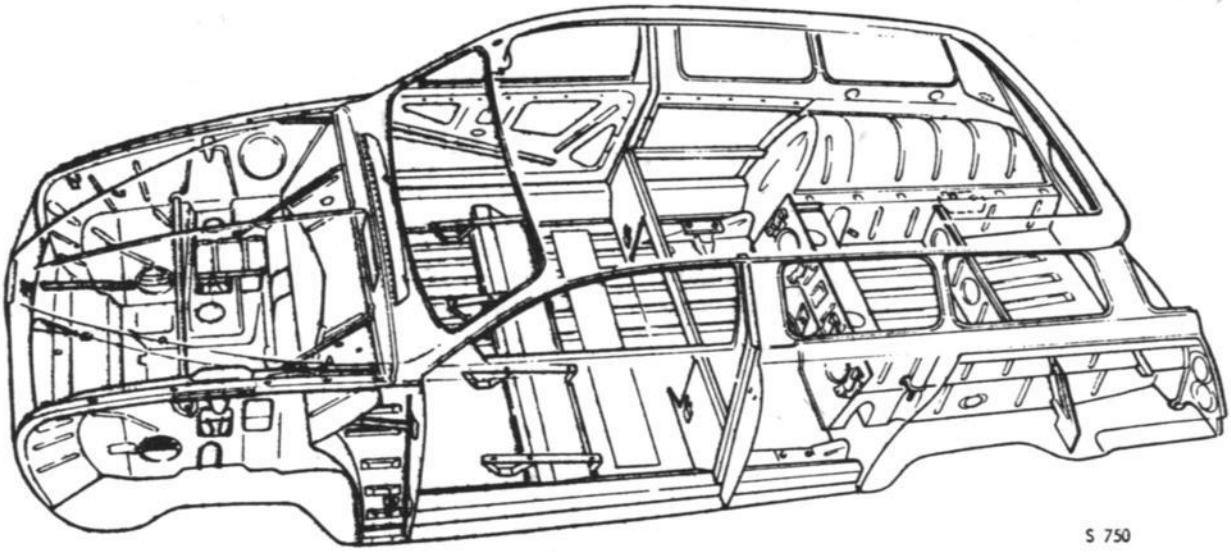

BODY, SAAB 95

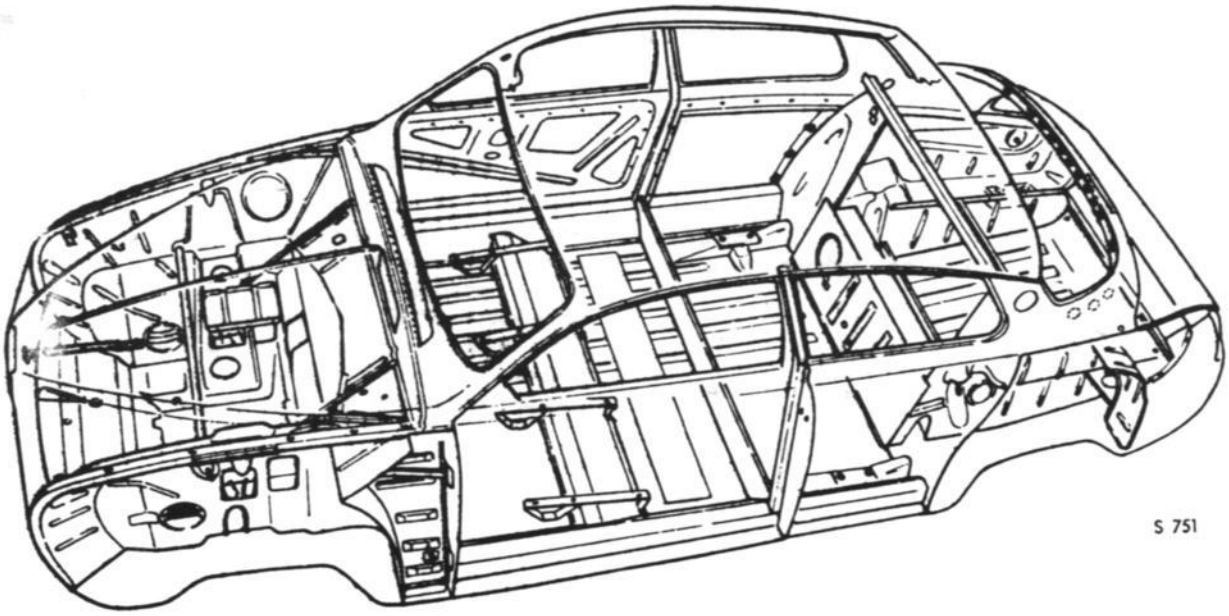

BODY, SAAB 96

Body fitments

The interior fitments of SAAB cars comprise chairs and seats and door and side linings retained by quick-release spring clips, headlining and mats.

The headlining in the SAAB 95 is stretched on piano-wire bows and retained by wire spirals in the roof rails. Because of the simplicity of the retaining devices, all parts easy to remove. SAAB 96 and Monte Carlo are equipped with a headlining that is wrapped round the upper edges of the frames for the windshield-, side- and rear window frames fastened with tape carrying adhesive on both sides.

The door linings are retained with quick-release spring clips at the lower and rear edges. At the leading edge, the trimming is secured by a U-shaped bar, while at the upper edge there is a protective strip, also secured with quick-release springs.

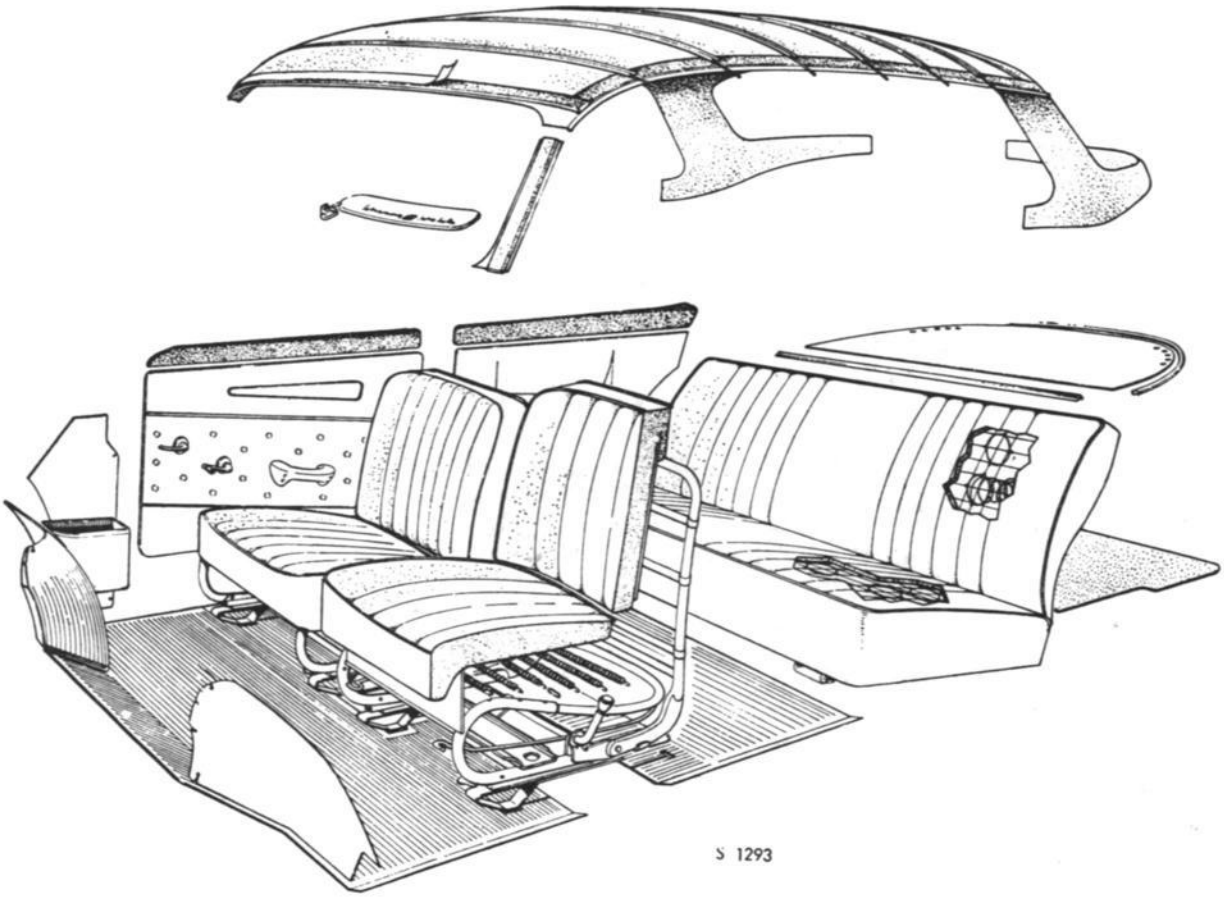

FITMENTS, SAAB 96 AS FROM MODEL 1967

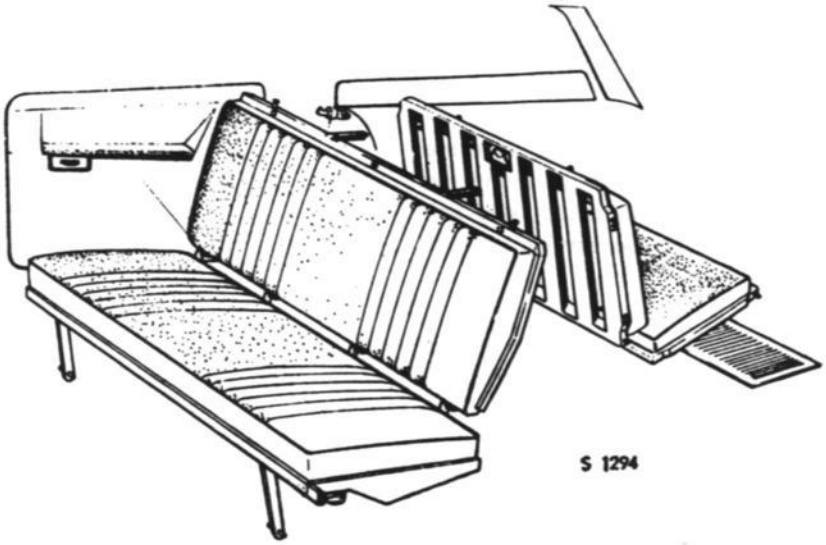

REAR SEAT, SAAB 95

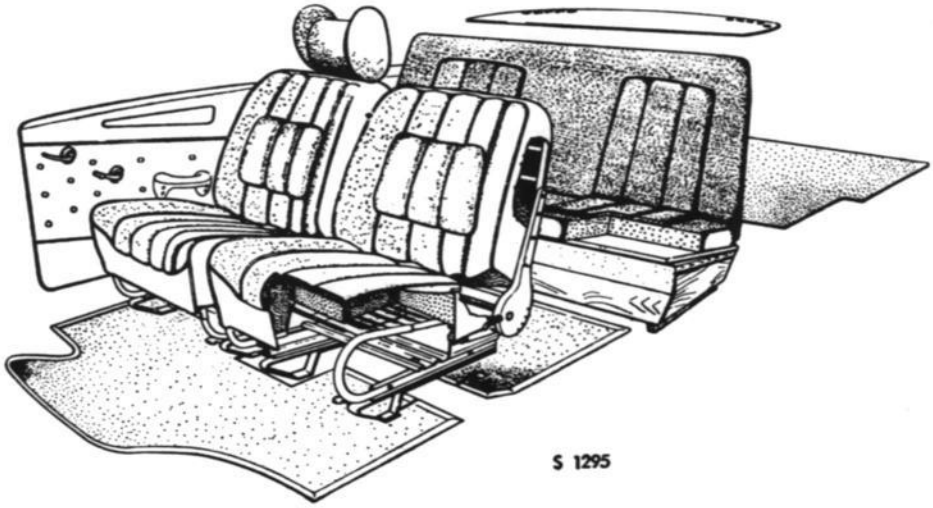

FITMENTS, MONTE CARLO

BODY ASSEMBLY

General

Any parts of the body assembly that have been so seriously damaged as the result of a collision or other accident that correction by beating or realigning is not suitable should be replaced by new ones. In many cases, even minor damage may be more quickly and cheaply repaired, and with better results, if the affected parts are replaced rather than repaired.

Some of the body panels available as spare parts are shown in the illustration below.

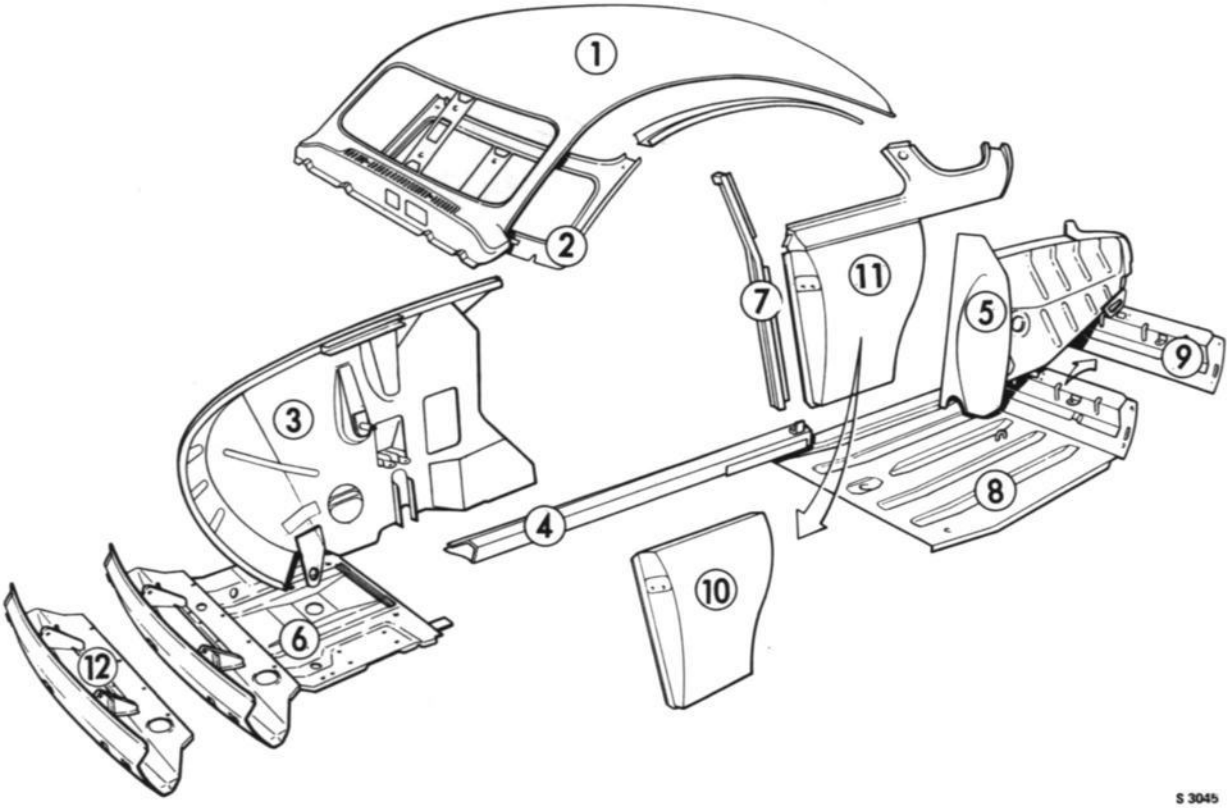

BODY ASSEMBLY COMPONENTS AVAILABLE AS SPARE PARTS

1. Roof sheet, water channel
2. Windshield frame
3. Front wheelhouse
4. Sill
5. Rear wheel house
6. Front floor
7. Rear pillar
8. Floor sheet, rear floor
9. Rear part
10. External valance, lower
11. External valance, complete
12. Front sheet

Removal of damaged body panels

When removing damaged body panels, great care should be exercised if burner tools are used, since this method readily causes heat stresses in the panels, resulting in distortion. Instead, panels should be removed with shears, saws or pneumatic chisels.

A method which often simplifies work is to cut the panel away with a burner at a distance of at least 1.2 in. (30 mm) from the scribed line, and then make the final trim with shears or a saw.

Tack-welded body panels must be removed with a burner, working as close to the weld point as possible, but not so close as to cause heat deformation of the undamaged panel.

Break off the remaining metal strip, and grind or chisel off any weld remains. See fig.

Spot-welded body panels are removed in a similar manner with a burner, so that a metal strip with the weld itself remains. Avoid cutting too near the actual weld. After burning, drill through each weld, using a bit with a diameter slightly bigger than the diameter of the spo weld, and drill through only the strip of metal that is to be removed. As the spot welds are pierced, roll and prize away the metal strip. Then grind off any weld remains. See fig.

REMOVING TACK-WELDED BODY PANELS

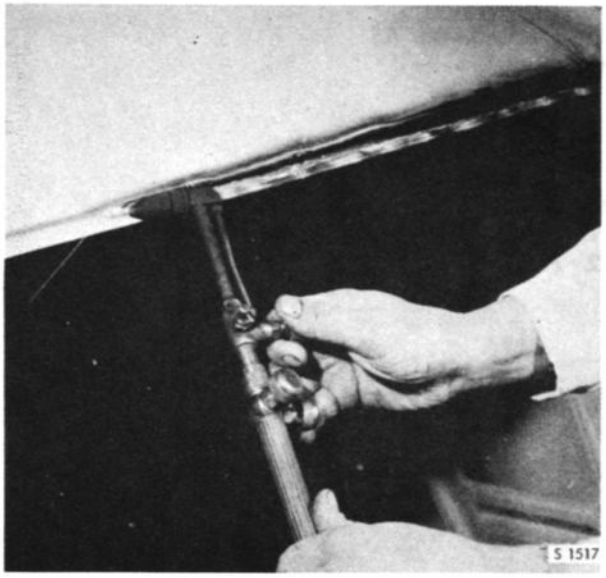

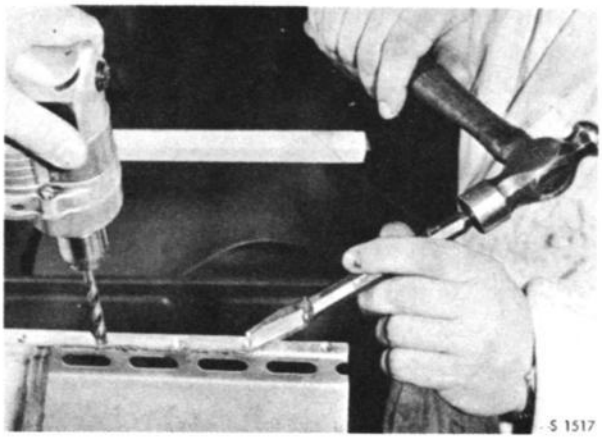

REMOVING SPOT-WELDED BODY PANELS

Welding new body panels

If the damaged panel was spot-welded, the replacement part should also be spot-welded. This is particularly important in the case of roof rails and other visible parts. A wide range of welding rods for this purpose is available on the market. If a spot-welding rod is not available, however, plug welding may be resorted to. Drill 0.2-in. (5-mm) holes in the overlying panel at the same center-to-center distances as the previous spot welds. Place the two panels together and fill the holes with the electric welding tool. On visible parts, it is difficult to obtain a neat finish by this method. See fig.

Originally tack-welded seams should be remade by electric welding in the same manner as the original weld. If only part of a panel has been replaced (the damaged section having been cut off), the new piece must be joined by acetylene welding. Locate the parts flush with the new joint in close contact. If double sheet is involved, weld on both sides. To avoid distortion, first join the parts with a few tack welds. Then finish welding, dealing with only short lengths at a time. Hammer the weld immediately, before it has had time to cool, in order to avoid residual stresses.

Sealing and finishing

It is of the utmost importance for new body panels to be effectively degreased after welding. After that, the panel can be primed and enamelled.

Coat the outsides of wheel houses, sills and floor panels with underseal composition. Panel seams through which water can enter the car must be closed with body sealing putty. Important joints in this category are found between, for instance, the roof panel and roof rail and between the upper and lower side panels.

> WARNING
>
> When electrowelding on a car equipped with an alternator, the battery ground- and all connections on the alternator shall be disconnected before. Otherwise damage will be caused to the rectifier diodes.

SPOT WELDING

REPAIRS TO FRONT END OF BODY

Disassembly

Work is simplified if all parts affected by the repair job in hand, such as hood, fenders, engine, transmission, chassis items and insulation and wiring inside the car, are first removed. If only one wheel house is damaged, it may suffice to remove the engine and the chassis items on the damaged side. Proceed in accordance with the disassembly instructions, which are to be found in the chapter dealing with the unit concerned.

Front cross-member

Whereas minor damage to the front cross-member can be repaired by straightening, this item is generally changed, as it is relatively simple to replace.

1. Cut or chisel off the front cross-member from the wheel house and floor panel.
2. Next, drill away the spot welds. These will be easier to find if you first grind with emery cloth.
3. Chisel off the remaining strip of panel and trim with a grinding disc.

REMOVAL OF FRONT CROSS-MEMBER BY CUTTING OR CHISELING

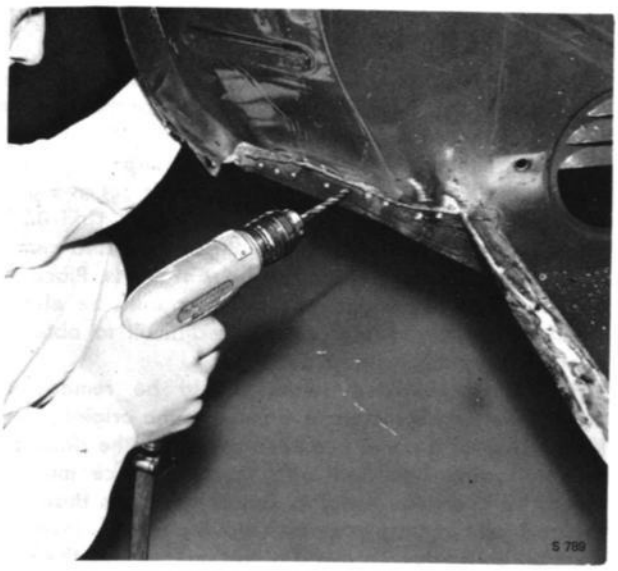

REMOVING SPOT-WELDS BY DRILLING

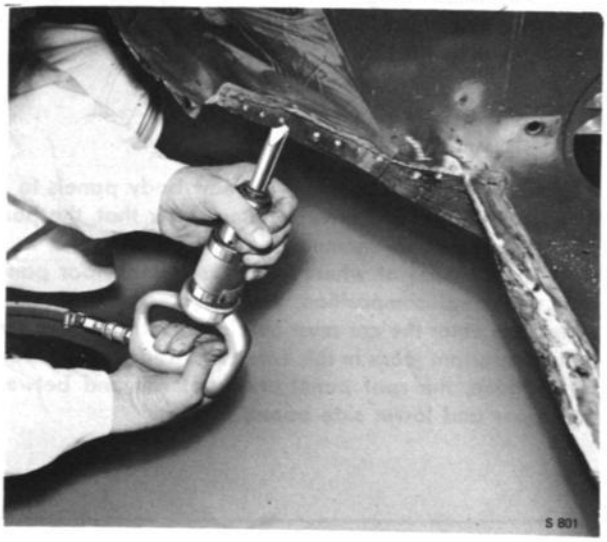

CHISELING OFF REMAINING METAL STRIPS

GRINDING AWAY WELD REMAINS

Wheel house

A slightly damaged wheel house can be repaired by straightening. The simplest way of doing this is to screw a support onto the front part of the wheel house, pressing the wheel house out with a jack fitted against the end of the sill. A second jack may possibly be fitted at the opposite wheel house and a support applied between the wheel houses to prevent them from giving.

If the damage is serious, and especially if sections behind the control-arm bracket are damaged, the wheel house must be replaced as described in the following:

1. Drill or cut away the wheel house from the front cross-member and floor panel.
2. Cut off the control-arm bracket as close to the floor panel as possible, but take care not to damage the floor panel.

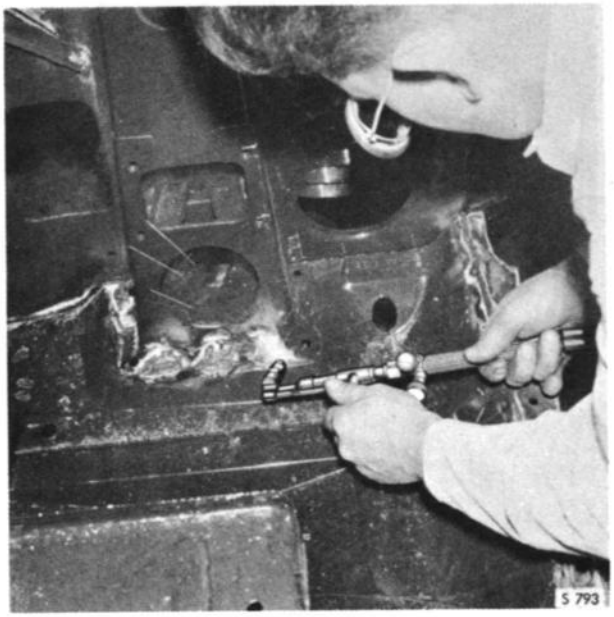

CUTTING AWAY THE WHEEL HOUSE AND CONTROL-ARM BRACKET

3. Cut the transverse stay pipe close to the reinforcement at the wheel house.
4. Drill off the hood-lock rail from the wheel-house flange.
5. Cut off from the wheel house the stay which goes up towards the dash panel.
6. Using a hacksaw, cut off the wheel-house flange at the dash panel.

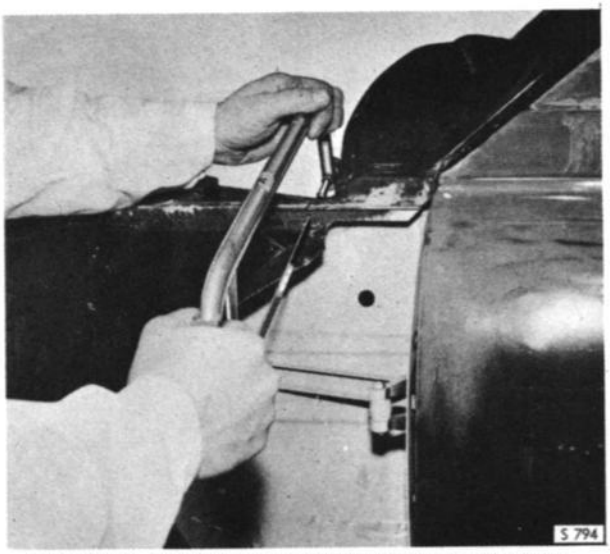

CUTTING THE WHEEL-HOUSE FLANGE BY THE DASH PANEL

7. Remove the underseal composition from the joint at the dash panel. The simplest way of doing this is to heat with a welding torch, blowing with compressed air at the same time.

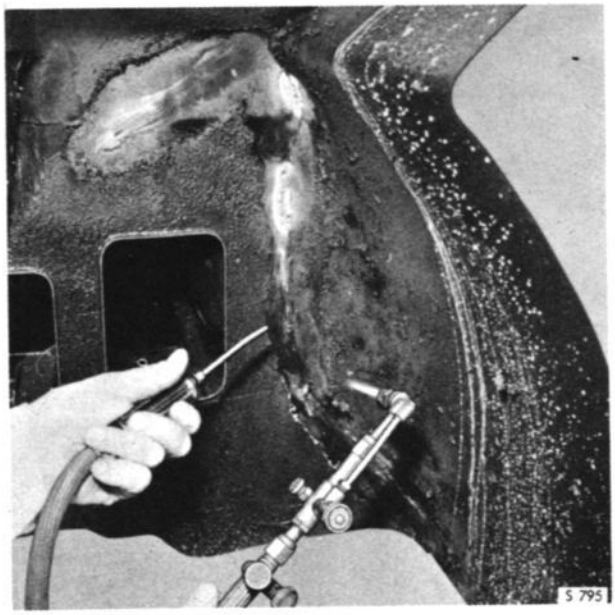

REMOVING UNDERSEAL COMPOSITION WITH A WELDING TORCH AND COMPRESSED AIR

8. Cut or chisel off the wheel house from the dash panel.
9. Drill away all spot welds and chisel off the remaining strips of sheet metal.
10. Grind off all weld residues, etc., with a grinding disc.

REMOVAL OF WHEEL HOUSE FROM DASH PANEL, CUTTING OR CHISELING

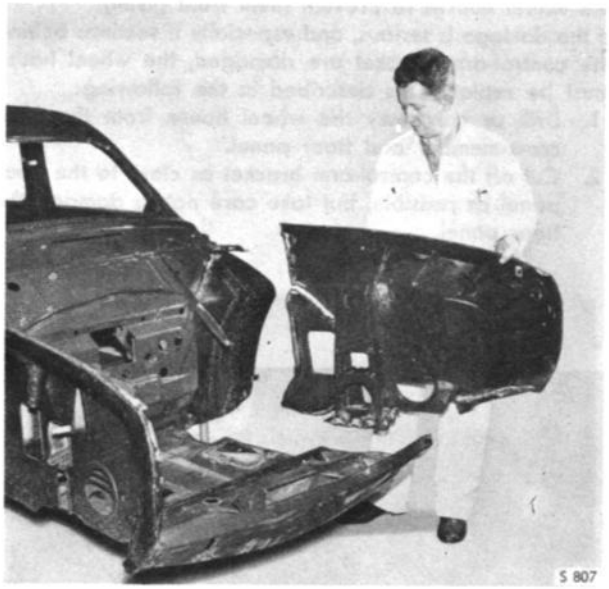

REMOVING THE WHEEL HOUSE

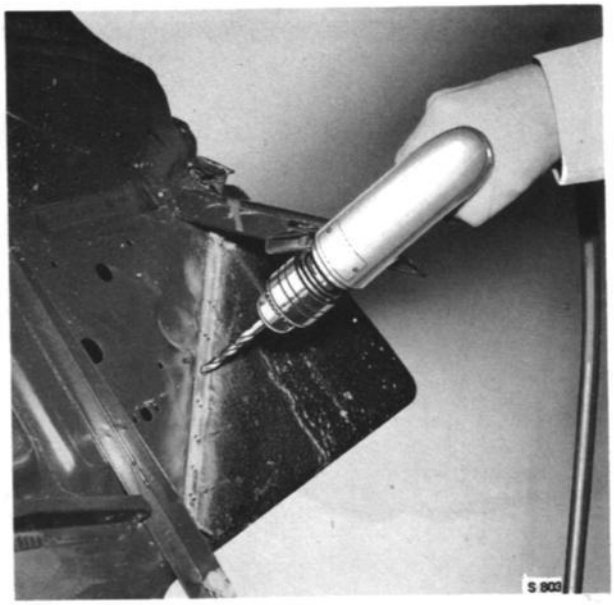

REMOVING SPOT-WELDS BY DRILLING

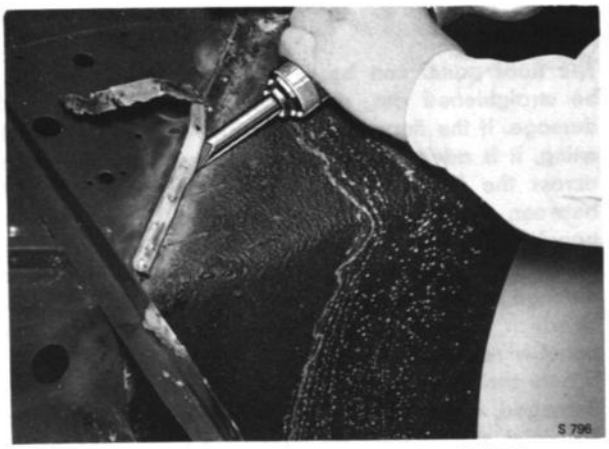

CHISELING OFF REMAINING METAL STRIPS

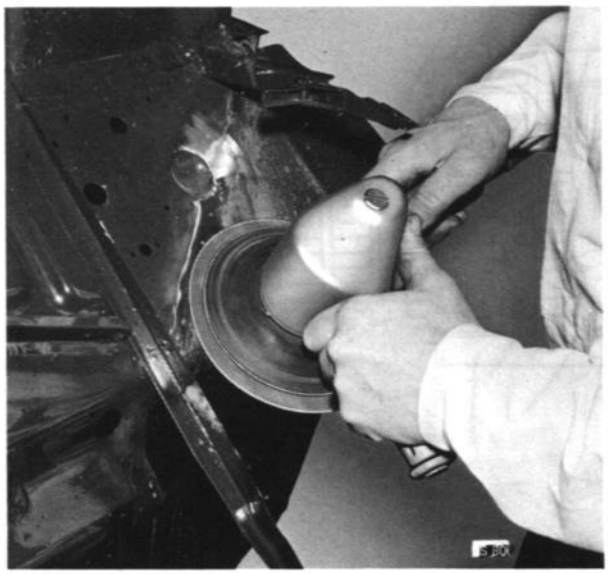

GRINDING AWAY WELD REMAINS

Floor panel

The floor panel can be replaced entirely or partly, or be straightened out, depending on the extent of the damage. If the floor panel is to be repaired by straightening, it is advisable to place a beam or similar object across the floor and to apply a jack on both sides between the end of the sill and the beam. The floor panel can then be pulled forwards into the correct position. This procedure is also used for straightening out damage to the center floor panel behind the dash panel, in which case it must be done before the front floor panel is removed.

If only the front part of the floor panel, for example, is damaged, it will only be necessary to replace this part. The joint should then be commenced from the existing holes. Remove the damaged part with a cutting torch or pneumatic chisel and then fit in the corresponding new part. The job of ensuring a good fit is facilitated by commencing from the original holes in the floor panel. To change the entire floor panel, proceed as follows:

1. Cut off the front cross-member and floor from the wheel house and control-arm bracket.
2. Cut off the floor from the rear engine bracket and at the joint by the dash panel.
3. Drill of the spot welds from the remaining strips of sheet metal and then chisel of these strips.
4. Grind clean at spot-weld joints and grind away tack welds at the control-arm bracket and rear engine bracket.

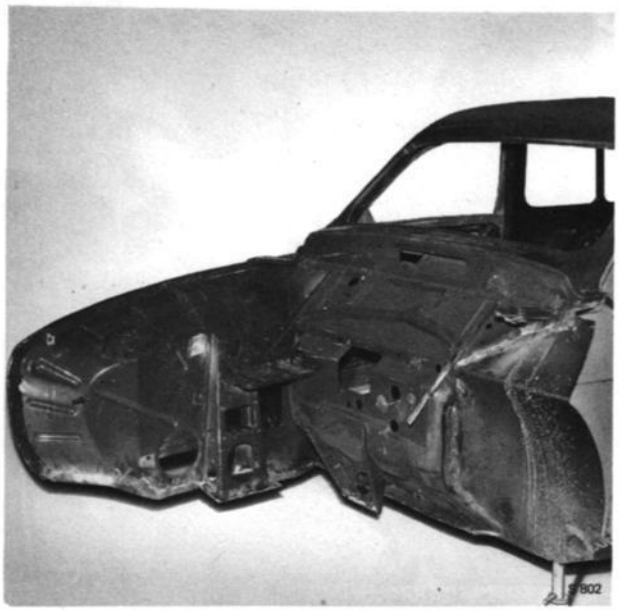

CUTTING THE FLOOR LOOSE FROM THE REAR ENGINE BRACKET AND AT THE DASH PANEL, WHEEL HOUSE AND CONTROL-ARM BRACKET

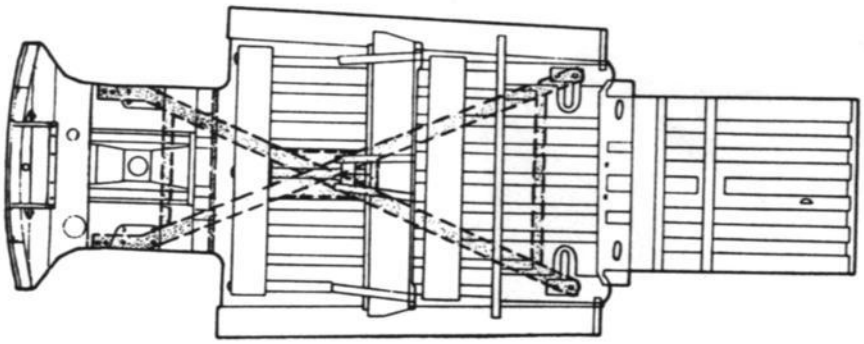

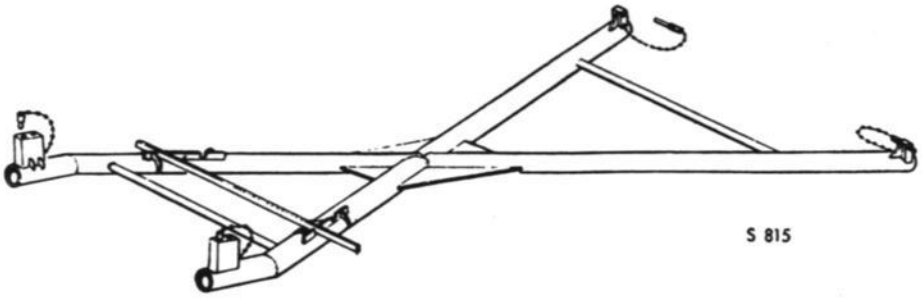

LOCATION OF TOOL No. 784077 FOR DIAGONAL ALIGNMENT OF BODY ASSEMBLY

REASSEMBLY

Floor panel

1. Straighten the rear engine bracket and dash panel if these parts have been distorted. Straighten and grind off weld remains at joints against the wheel house and dash panel.
2. Fit the new front floor panel, using tool No. 784077. Fit the tool under the body, in the brackets for the rear-axle side links. At the front, locate the guide studs of the tool in the rear hole of the cleat and the rear hole for the stabilizer-bar bearings in the floor panel. (For earlier models, use the corresponding front holes in the tool and the floor panel.)
3. Place a jack under the tool and lift the floor panel into position against the control-arm brackets.
4. Fit a new wheel house also, if this item is to be changed. See below.
5. Bolt the floor panel to the control-arm brackets on the wheel houses.

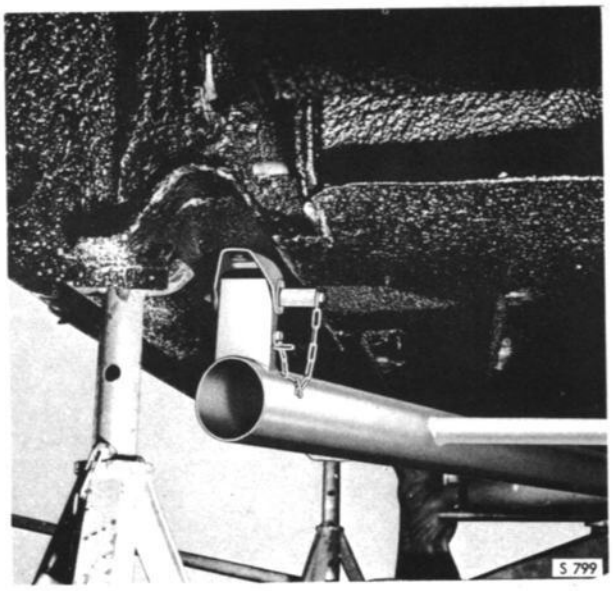

FITTING TOOL No. 784077 IN THE BRACKETS FOR THE REAR-AXLE SIDE LINKS

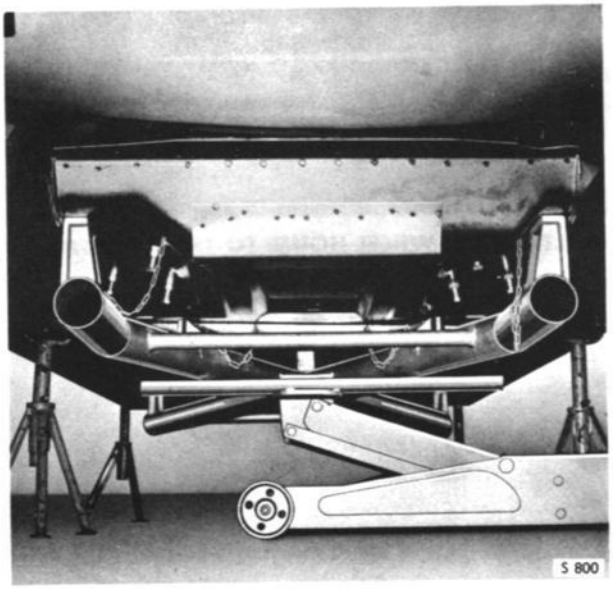

FITTING THE FLOOR PANEL WITH THE AID OF TOOL No. 784077 AND USING A JACK

6. Screw tool No. 784145 to the control-arm brackets on the wheel houses, whereupon the correct relative position is obtained between the wheel houses.

BOLTING THE WHEEL HOUSE TO THE FLOOR AND FITTING OF TOOL No. 784145.

7. Using the jack located under tool No. 784077, lift the floor panel to the correct height, according to the dimensions indicated in the dimensional sketch.
8. If the wheel house has also been replaced, fix it to the dash panel with electric welding.
9. Electrically weld the floor panel at the rear edge. Meanwhile, press the floor panel up into position against the center floor with the aid of a jack fitted under the loose steel straight edge on tool No. 784077.
10. Tack-weld the wheel-house brackets to the floor and hammer the weld before is has cooled. Use a support on the opposite side.
11. Spot-weld or plug-weld the floor panel to the wheel houses.

If the above-mentioned tools, No. 784077 and 784145, are not available, the floor panel can be fitted according to the dimensions indicated in the dimensional sketch.

Wheel house

1. Straighten and grind off weld remains at the joints against the dash panel and floor panel.
2. Fit the upper, rear corner of the wheel house by cutting with a hacksaw.
3. Tighten the wheel house to the floor panel with bolts through the holes in the control-arm bracket.
4. Screw tool No. 784145 to the control-arm brackets of the wheel houses to ensure the correct relative positions between the wheel houses.

5. Jack up the floor panel to the correct height, see dimensional sketch and check that the hood fits.
7. If necessary, fit a new side stay and weld it on.
8. Tack-weld the wheel-house brackets to the floor and, using a support on the opposite side, hammer the weld before it has cooled.
9. Spot-weld or plug-weld the floor panel to the wheel house.

Front cross-member and engine bracket

1. Locate the front cross-member with clamps and bolts through the holes for the front panel.
2. Fit tool No. 784143 to check that the distance between the engine brackets is correct.
3. Spot-weld or plug-weld at the wheel houses and tack-weld by electric welding on both sides at the floor panel and on the inside against the wheel houses.
4. If necessary, tack-weld the rear engine bracket to the floor panel.

Other operations

1. Finish-weld wheel houses and front cross-member joints at the floor panel and the rear floor-panel seam at the dash panel. Check that shock-absorber brackets, etc., are adequately welded.
2. Apply surface finishes and paint.
3. Refit the rear-axle side links, front suspension, power unit, etc.

As the various items are reassembled in accordance with the instructions in the chapters concerned, make sure that damaged parts are replaced by new ones before being fitted. Particular attention should be devoted to steering-gear parts, steering arms and control arms.

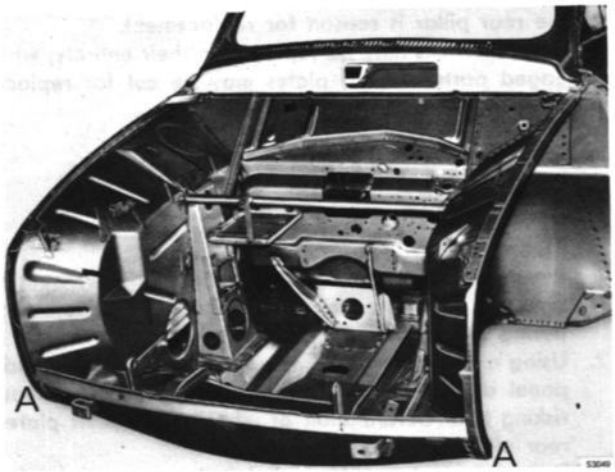

ALIGNMENT OF FRONT CROSS-MEMBER — SECURED WITH BOLTS AT "A".

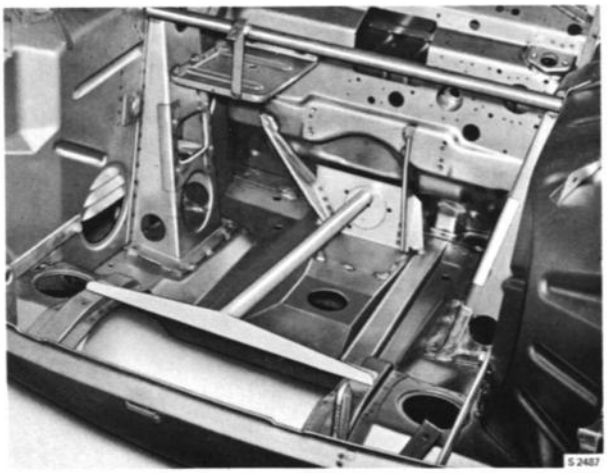

USE OF TOOL No. 786046 TO CHECK CORRECT DISTANCE BETWEEN ENGINE BRACKETS WHEN WELDING

REPAIR OF BODY SIDES

In a collision involving a blow from the side not only the door but also the external valances, rear pillar and scuff plates may be distorted. Any noticeable distortion of the rear pillar is reason for replacement.
External valances may be replaced in their entirety, while damaged parts of scuff plates may be cut for replacement.

DISASSEMBLY

Side panel assy

1. Remove door, rear fender, quarter window, quarter trim and any other trim items likely to be damaged during the following operations.
2. Using a gas cutting tool, remove damaged lower side panel as close to welded seam as possible, without risking heat deformation of wheelhouse, scuff plates, rear pillar or quarter panel.
3. Drill out spot welds and break away remaining sheet-metal strip, as shown.
4. Grind away remains of welds.

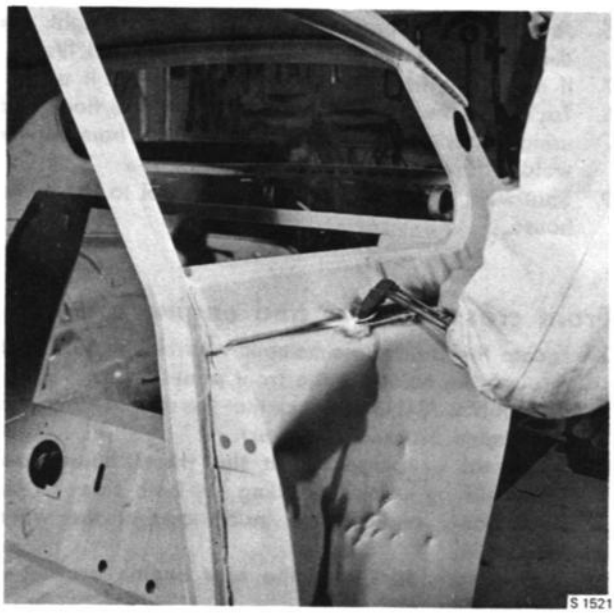

REMOVAL OF EXTERNAL VALANCES LOWER

5. If damaged, the quarter panel may be removed in the same manner as the side panel. On the Saab 96 the quarter panel is joined to the quarter-window and rear-window reinforcement panels, roof panel, rear compartment surround and wheel house. There is a tinned seam at the lower side of the rear window, see fig.

Rear pillar

1. Saw through pillar at roof.
2. Chisel away welded joint between pillar and scuff plate, and pull away pillar.
3. Grind off weld remains at water channel and scuff plate.

Scuff plate

Partial damage to the scuff plate may be repaired by sawing out the affected part and welding in a new piece.

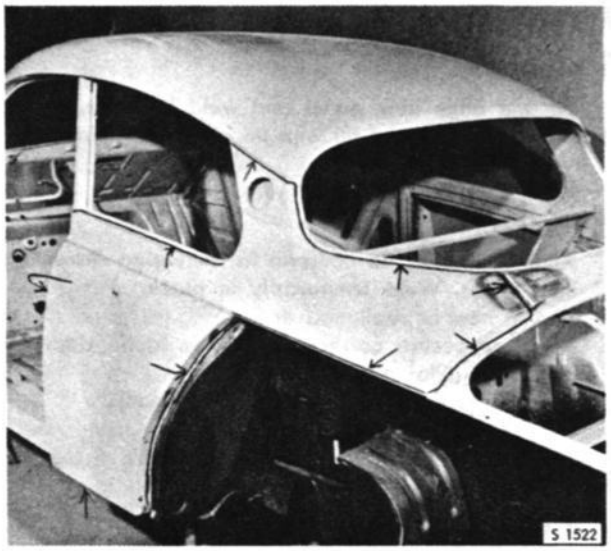

REMOVAL OF EXTERNAL VALANCES

REASSEMBLY

Scuff plate

1. Fit and align new panel and weld in place.
2. Tidy up welds and fill with tin at visible points.

Rear pillar

1. Align rear pillar to conform to dimension shown on illustrations. Weld temporarily in place.
2. Test fit new or realigned door.
3. Adjust to secure correct clearances round door by correcting pillar alignment.
4. Remove door and weld rear pillar finally.

Side panel assy

1. If only lower external valance has been removed, drill holes for plug welding in upper flange of new panel. See fig.
2. If no spot-welding equipment is available, also drill holes for plug welding in flanges adjoining rear pillar, scuff plate and wheelhouse.
3. Fit external valance and align with the aid of clamps.
4. Plug weld top flange to quarter panel and spot or plug weld other joints.
5. If entire external valance assy has been removed, it may be replaced as a single part, in the case of the Saab 96 and Saab Sport. Weld the assembly to rear pillar, reinforcement panels and wheelhouse, using plug or spot welding as described in (4), above. At roof and below rear window use acetylene welding, and smooth the weld below the rear window by tin filling.

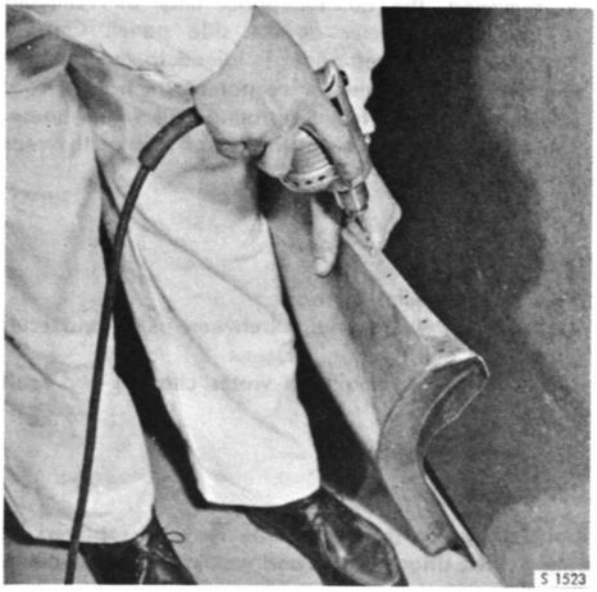

DRILLING HOLES FOR PLUG WELDING

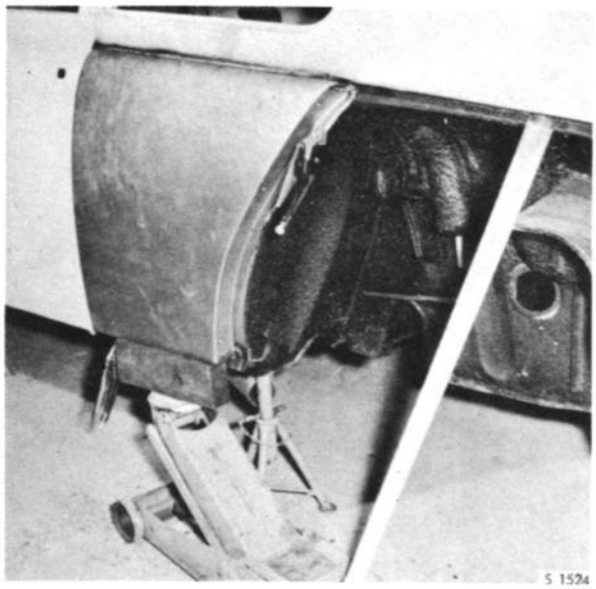

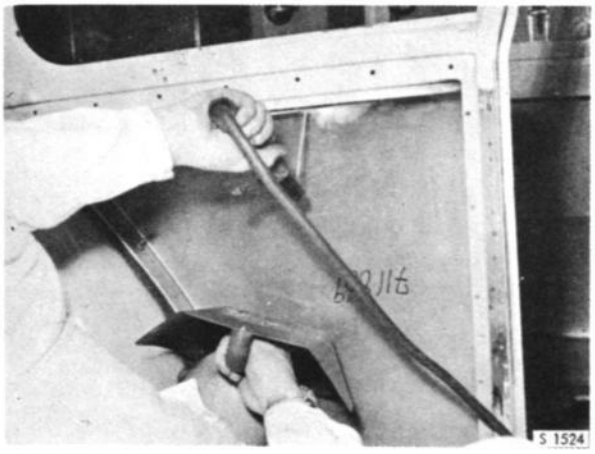

WELDING OF EXTERNAL VALANCE

REPAIR OF ROOF ASSY

If the roof is so badly damaged that bumping is not economically feasible, the entire roof sheet including water channels and drip moldings, may be replaced.

Disassembly

1. Jack up car and support on blocks under scuff plates and wheelhouses, on a level floor, to ensure that body will not change shape when roof is removed.
2. Remove doors, trim and wiring, and protect instrument panel and steering wheel against damage.
3. Burn away damaged roof parallel with water channels, windshield and rear window as shown in illustration, leaving a narrow strip of metal at welded joints. Then drill out spot welds and break away remaining strip.
4. After removing electrical wiring in windshield pillars, saw through pillars immediately below curve of upper corner. Allow windshield reinforcement panel to remain undisturbed if not damaged.

> WARNING
>
> Do not cut pillars too low down, as this will result in loss of roof support provided by tubular steel reinforcements.

5. Saw away any damaged sections of water channels, drip moldings, window reinforcements, and glass channels.
6. Grind off weld remains.

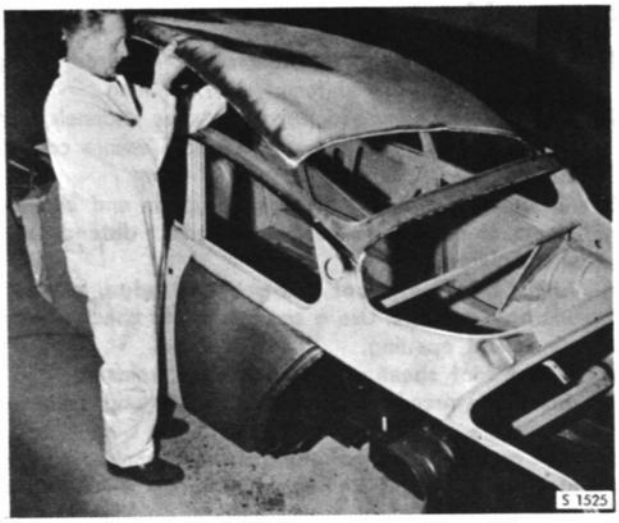

CUTTING AWAY ROOF PANEL

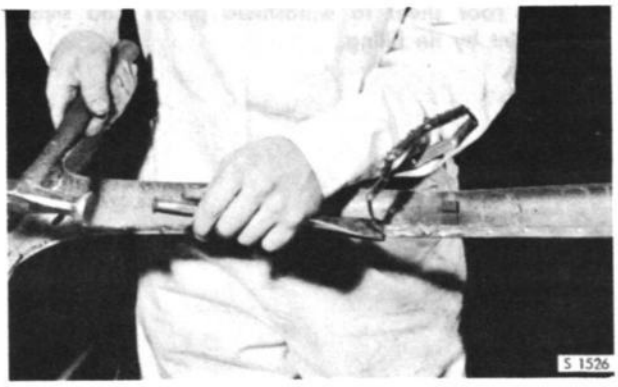

REMOVING WELD REMAINS. NOTE POINT AT WHICH PILLARS ARE CUT.

Reassembly

1. Fit new windshield reinforcement if required, using a windshield glass as templet for opening.
2. Replace any damaged parts of water channels and mouldings. Doors must be try-fitted to ensure correct clearance.
3. Measure diagonally location of upper end of rear pillars, to ensure symmetry and correct distance between pillars.
4. Adjust fit of new roof sheet at front edge, between windshield pillars. Use a spare glass to check size of windshield opening.
5. Attach roof sheet with a few tack welds at windshield reinforcement. Simultaneously clamp sheet at rear edge.
6. Spot or plug weld roof along water channels, starting at front end and working alternately on left and right sides.
7. Complete welding by spot or plug methods at windshield and rear window.
8. Weld roof sheet to windshield pillars and smooth off joint by tin filling.

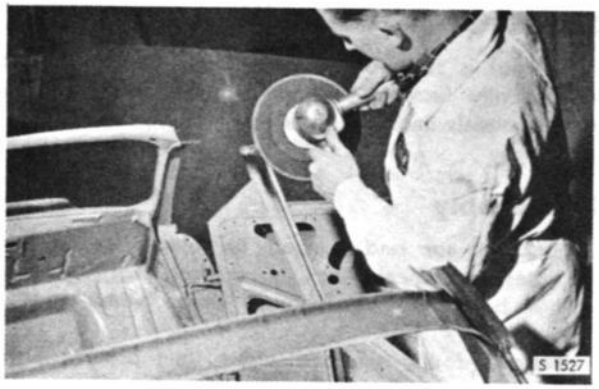

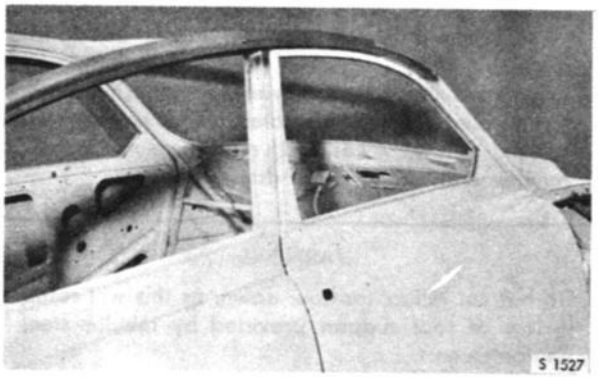

FITTING NEW ROOF RAIL AND MOULDING

DIAGONAL MEASUREMENT OF CENTER PILLAR

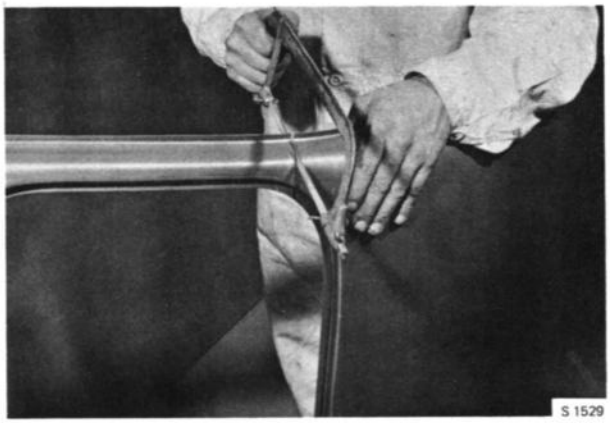

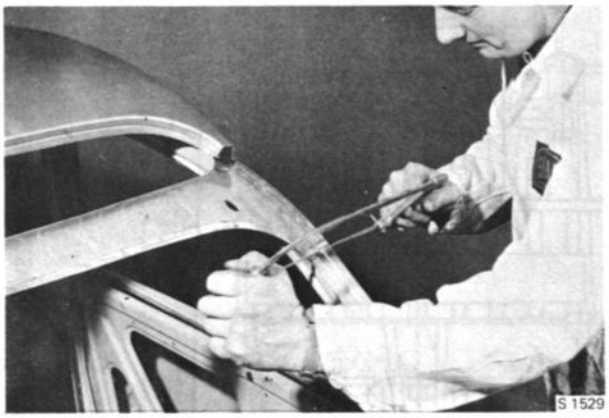

FITTING AND WELDING OF ROOF SHEET

REPAIRS AT REAR END OF BODY ASSY

If a rear wheel has been struck in a collision the wheels and rear axle should be checked. If the rear axle bearings are misaligned remove the axle and correct the center bearing bracket. Also remove lower suspension arms at front end and release stabilizer bar from body attachments to permit fitting of tool No. 784077 for checking of rear axle side-link attachments. See fig. Check furthermore that the center bearing bracket is located exactly midway between side-link brackets on underside of floor panel.

The rear compartment floor pan, rear body panels and rear wheelhouses are available as service parts and may be replaced if damaged, this being resorted to if warranted by shortage of time or expence of realignment of existing panels.

A rear end which has been compressed abreast the rear axle tunnel may be restored to shape by removing the rear fenders and bolting a strong beam between the rear bumper brackets.

With a jack fitted on each side between this beam and the scuff ends the body may then be pressed out to correct shape.

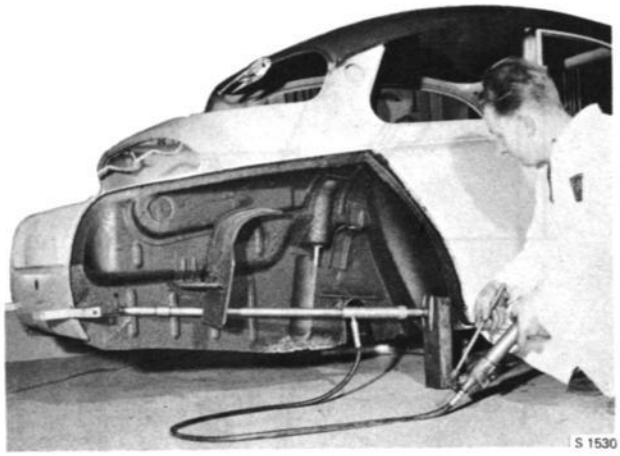

REALIGNMENT OF REAR WHEELHOUSES

CHECKING BODY DIMENSIONS

After the replacement of body panels or realignment jobs it is important that checks be made of door openings, and fixtures for suspension and power assembly. Check also body diagonal measurements to ensure that the body assembly is symmetrical and correctly aligned.

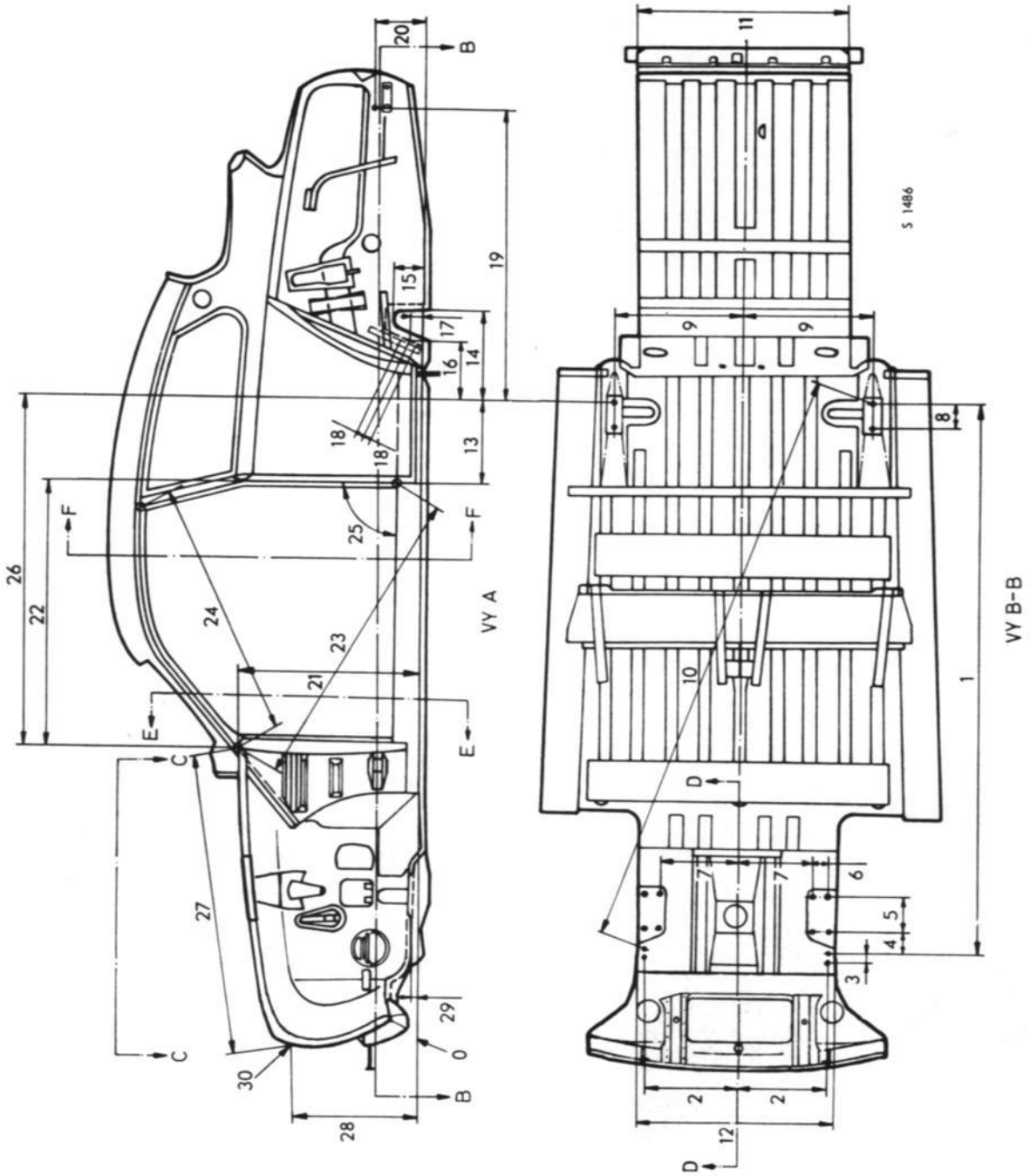

BASIC BODY MEASUREMENTS, SAAB 96

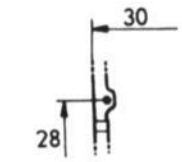

VY G-G

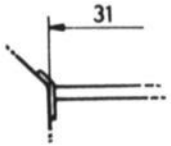

VY H-H

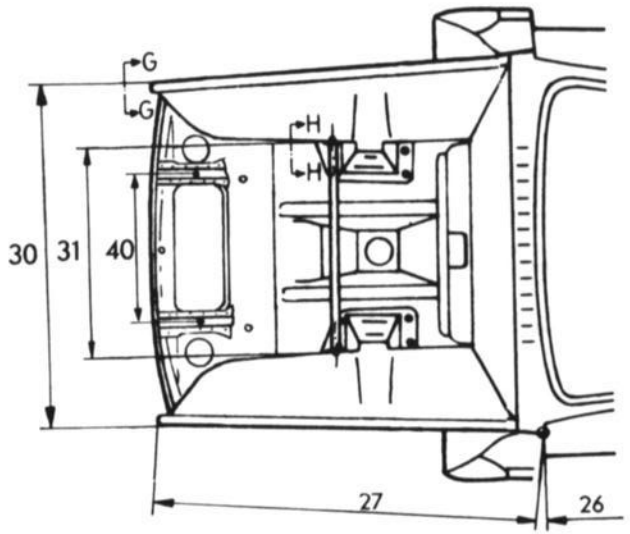

VY C-C

S 1485

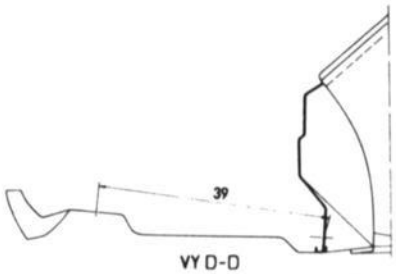

VY D-D

S 1484

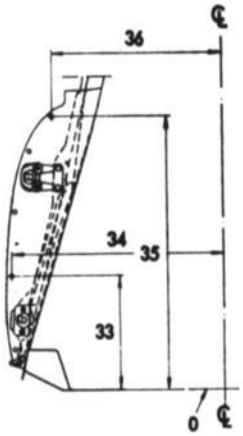

VY E-E

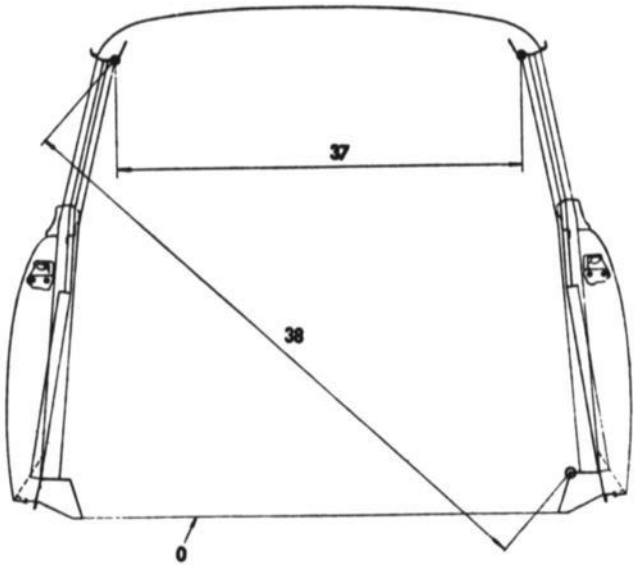

VY F-F

S 811

Body measurements SAAB 96 The same table with English measures on page 810—22.

Item	mm.	Remarks	Item	mm.	Remarks
0	—	Underside of sill	22	1050±3	To leading edge of pillar reinforcement tube
1	**2138±2**		23	1207±4	
2	**347±1**		24	1023±4	
3	**38±0,5**		25	90°	
4	**84,5±1,5**		26	1377±5	Tongue of cowl plate view A and C-C
5	**210±1**				
6	**99±0,5**		27	**1256±3**	Measured parallel to wheelhouse. See C-C
7	**249,5±1,5**				
8	**100±0,5**		28	**420±2**	
9	**485±1,5**		29	**25±2**	
10	**2294±3**		30	**1084±2**	See view A, view C-C and view G-G
11	784±3				
12	730±2		31	**730±2**	See view C-C and view H-H
13	327±3	To leading edge of pillar reinforcement tube			
14	365±3		33	271±3	
15	139±3		34	760±2	
16	**237±1**	To middle of center bearing	35	643±3	
			36	663±2	
17	**53±3**	To middle of center bearing	37	1006±3	To upper edge of pillar
			38	1504±4	
18	30±0,5		39	**666.5±2**	Holes for engine suspension pads
19	1161±4				
20	203±4		40	**450±1**	
21	706±3				

Note! The most important measurements are indicated in bold type.

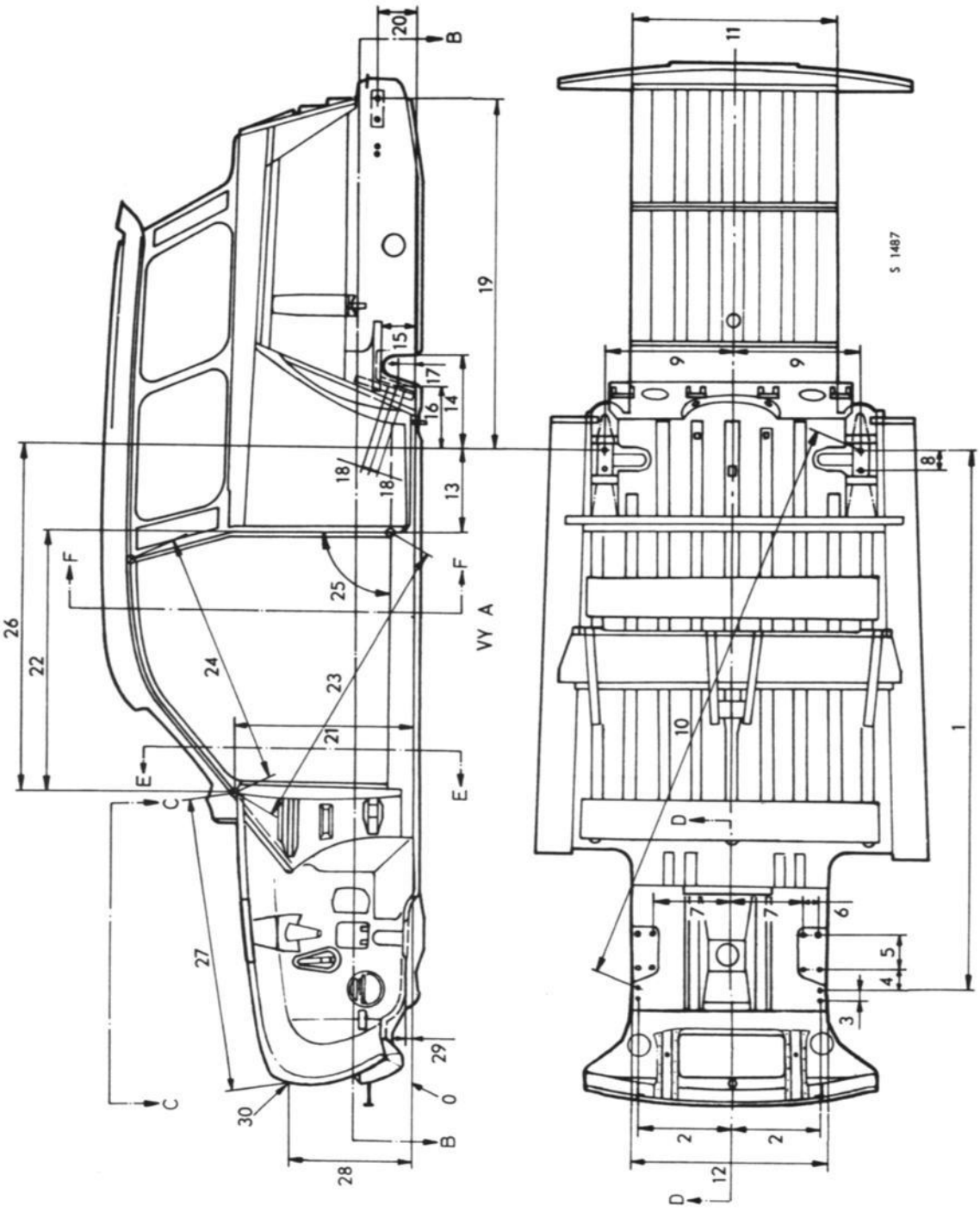

BASIC BODY MEASUREMENTS, SAAB 95

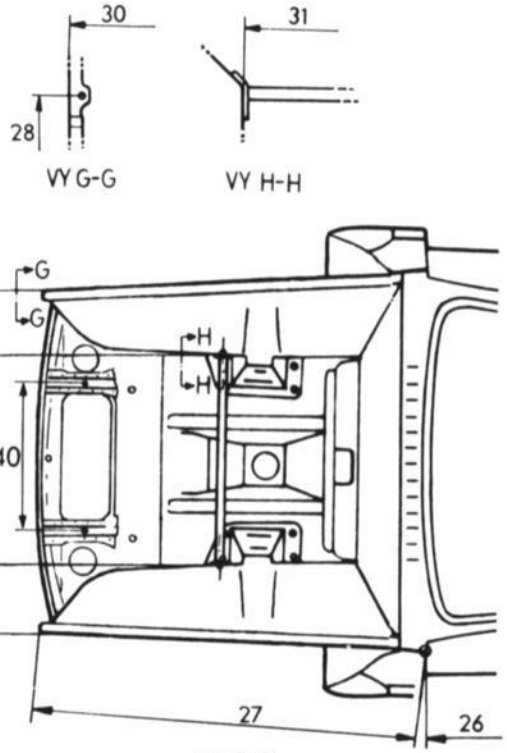

VY C-C

S 1485

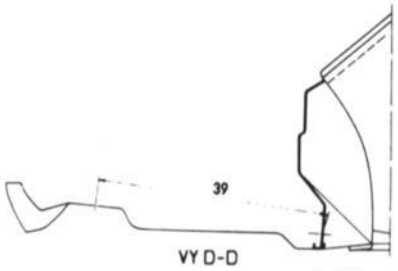

VY D-D

S 1484

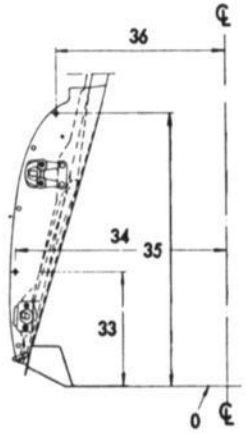

VY E-E

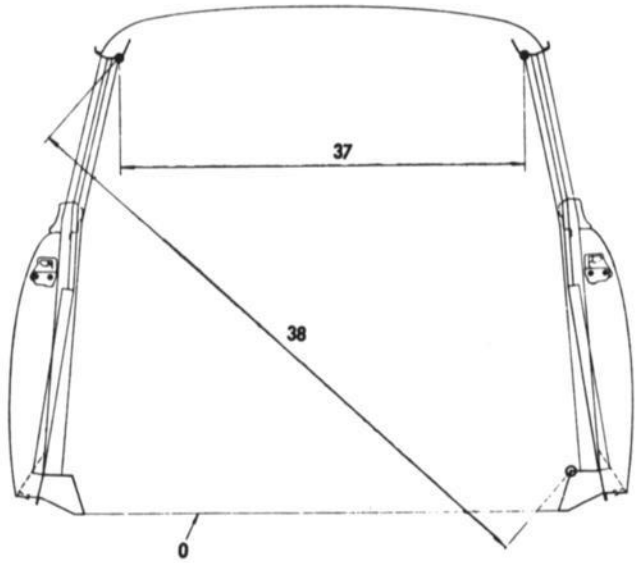

VY F-F

S 811

Body measurements, Saab 95 The same table with English measures on page 810–22.

Item	mm.	Remarks	Item	mm.	Remarks
0	—	Underside of sill	22	1050 ± 3	To leading edge of pillar reinforcement tube
1	**2138 ± 2**				
2	**347 ± 1**		23	1207±4	
3	38 ± 0,5		24	1023 ± 4	
4	**84,5 ± 1,5**		25	90°	
5	**210 ± 1**		26	1377 ± 5	Tongue of dash panel, elev. A and plan C-C
6	**99 ± 0,5**				
7	**249,5 ± 1,5**		**27**	**1256 ± 3**	Measured parallel to wheelhouse — see C-C
8	**100 ± 0,5**		**28**	**420 ± 2**	
9	**485 ± 1,5**		**29**	**25 ± 2**	
10	**2294 ± 3**		**30**	**1084 ± 2**	See elev. A and plan C-C and plan G-G
11	784 ± 3				
12	730 ± 2		**31**	**730 ± 2**	See plan C-C and H-H
13	327 ± 3	To leading edge of pillar reinforcement tube	33	271 ± 3	
14	365 ± 3		34	760 ± 2	
15	139 ± 3		35	643 ± 3	
16	**237 ± 1**	To middle of center brg.	36	663 ± 2	
17	**53 ± 3**	— ,, —	37	1006 ± 3	To upper edge of pillar
18	30 ± 0,5		38	1504 ± 4	
19	1345 ± 4		**39**	**666,5±2**	Holes for engine suspension pads
20	161 ± 4				
21	706 ± 3		40	450±1	

N.B. The most important measurements are indicated in bold type.

Body measurements, Saab 96 The same table with metrical measures on page 810–19.

Item	ft.	in.	Remarks	Item	ft.	in.	Remarks
0		—	Underside of sill	22	3	5,34 ±0.12	To leading edge of pillar reinforcement tube
1	7	**0,17 ±0.08**					
2	1	**1,66 ±0.04**		23	3	11,52 ±0.16	
3		1,50 ±0.02		24	3	4,28 ±0.16	
4		**3,33 ±0.06**		25		90°	
5		**8,27 ±0.04**		26	4	6,21 ±0.20	Tongue of dash panel, elev. A and plan C-C
6		**3,90 ±0.02**					
7		**9,82 ±0.06**		**27**	**4**	**1,45 ±0.12**	Measured parallel to wheelhouse — see C-C
8		**3,94 ±0.02**					
9	1	**7,09 ±0.06**		**28**	1	**4,54 ±0.08**	
10	7	**6,31 ±0.12**		29		0,98 ±0.08	From underside of floor to underside of sill
11	2	6,87 ±0.12					
12	2	4,74 ±0.08		**30**	**3**	**6,60 ±0.08**	See view A, view C-C and G-G
13	1	0,87 ±0.12	To leading edge of pillar reinforcement tube	**31**	**2**	**4,74 ±0.08**	See view C-C and view H-H
14	1	2,37 ±0.12					
15		5,47 ±0.12					
16		**9,33 ±0.04**	To middle of center brg.	33		10,67 ±0.12	
17		**2,09 ±0.12**	— ,, —	34	2	5,92 ±0.08	
18		1,18 ±0.02		35	2	1,31 ±0.12	
19	3	9,71 ±0.16		36	2	2,10 ±0.08	
20		7,99 ±0.16		37	3	3,61 ±0.12	To upper edge of pillar
21	2	3,80 ±0.12		38	4	11,21 ±0.16	
				39	2	**2,24±0.08**	Holes for engine suspension pads
				40	1	**5,71±0.04**	

N.B. The most important measurements are indicated in bold type.

Body measurements, Saab 95 The same table with metrical measures on page 810–21.

Item	ft.	in.	Remarks	Item	ft.	in.	Remarks
0		—	Underside of sill	22	3	5,34 ±0.12	To leading edge of pillar reinforcement tube
1	7	**0,17 ±0.08**					
2	1	**1,66 ±0.04**		23	3	11,63 ±0.16	
3		1,50 ±0.02		24	3	4,28 ±0.16	
4		**3,33 ±0.06**		25		90°	
5		**8,27 ±0.04**		26	4	6,21 ±0.20	Tongue of dash panel, elev. A and plan C-C
6		**3,90 ±0.02**					
7		**9,82 ±0.06**		**27**	**4**	**1,45 ±0.12**	Measured parallel to wheelhouse — see C-C
8		**3,94 ±0.02**					
9	1	**7,09 ±0.06**		**28**	1	**4,54 ±0.08**	
10	7	**6,31 ±0.12**		29		0,98 ±0.08	From underside of floor to underside of scuff
11	2	6,87 ±0.12		**30**	**3**	**6,60 ±0.08**	
12	2	4,74 ±0.08		**31**	**2**	**4,74 ±0.08**	
13	1	0,87 ±0.12	To leading edge of pillar reinforcement tube	33		10,67 ±0.12	
14	1	2,37 ±0.12		34	2	5,92 ±0.08	
15		5,47 ±0.12		35	2	1,31 ±0.12	
16		**9,33 ±0.04**	To middle of center brg.	36	2	2,10 ±0.08	To upper edge of pillar
17		**2,09 ±0.12**	— ,, —	37	3	3,61 ±0.12	
18		1,18 ±0.02		38	4	11,21 ±0.16	Holes for engine suspension pads
19	4	5,00 ±0.16		39	2	**2,24±0.08**	
20		6,34 ±0.16					
21	2	3,80 ±0.12		40	1	**5,71±0.04**	

N.B. The most important measurements are indicated in bold type.

HOOD

Removal of hood

1. Open the hood with the control mechanism under the instrument panel. The hood then opens half-way. To open the hood wide, move the latch at its rear edge forwards and lift the hood forwards.
2. Remove the locking needles of the pivot pins, then press one of the hinge stays slightly inwards to free the pin. The assistant holding the hood on the other side helps to lift it off.

HOOD CATCH S 877

Installation of hood

1. Place the hood in the open position by the front panel.
2. Press the hinge stays inwards and slide the pins into the bearings.
3. Fit locking needles, if the pins already had such ones.
4. Close the hood.

Hood lock

The hood is fitted with a locking pin, longitudinally adjustable by means of two nuts. This adjustment can be used to obtain the wanted amount of tension on the hood in the locked position. The lock can be centered in relation to the pin in the hood by slackening the two retaining screws in the front panel.
If the hood control should be damaged so that the hood cannot be opened from inside the car, proceed as follows. Pass a screwdriver through the grille immediately under the lock and press the control arm to the right. The hood can now be opened.

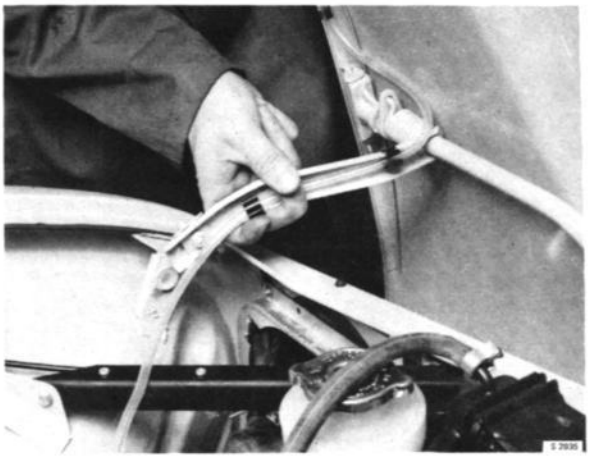

REMOVAL OF HOOD

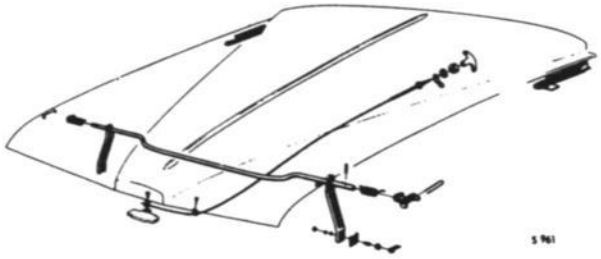

HOOD WITH ATACHMENT COMPONENTS

FRONT PLATE UP TO AND INCL. MODEL 1968

To remove the front panel, back off and remove the two screws on either side and the screws for the radiator supports and wheel-house brackets.
Disconnect the hood control and the cable connections for the headlamps and flashers — and for the parking lights.

Headlamps shells

The headlamp shells are incorporated in the front panel which is pressed in a special fashion in order to accommodate them. When replacing the front panel or shells, the parts must be drilled and riveted to each other.

Grille

The grille is attached to the front panel by means of six bolts which are screwed directly into the grille panel and are accessible from inside the front panel.

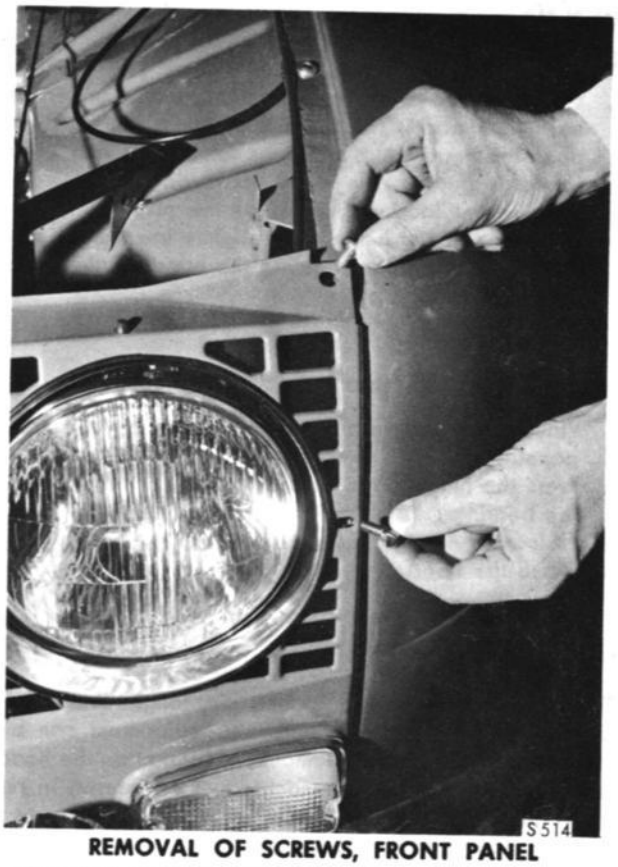

REMOVAL OF SCREWS, FRONT PANEL

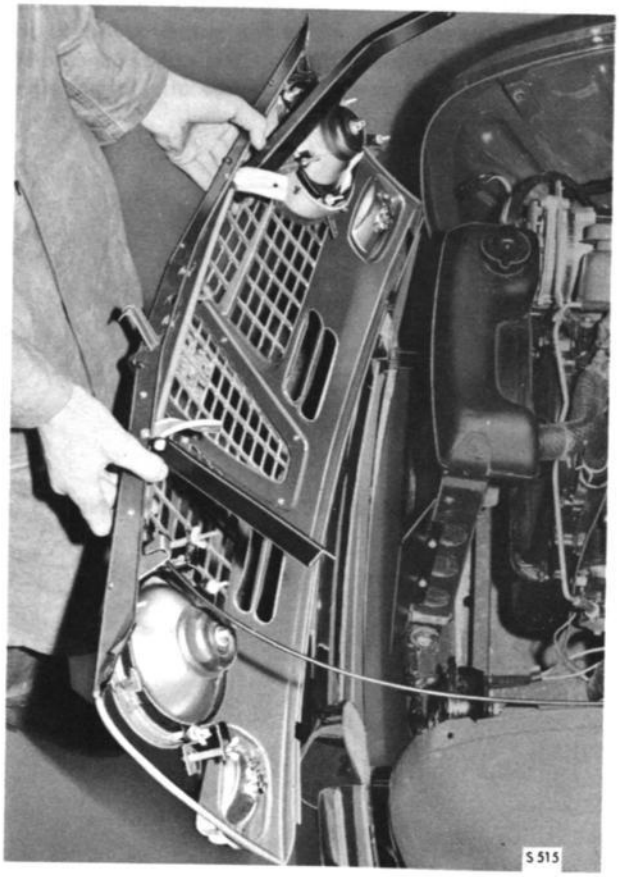

REMOVAL OF FRONT PANEL

FRONT PLATE MODEL 1969–1970

Decor frames, headlights

The decor frame is attached to the front plate as follows: two pins in the lateral part of the decor frame are pressed into the rubber bushings in the outer ends of the front plate, and a selftapping screw is inserted through the opposite side of the decor frame.
At removal, loosen the selftapping screw, then pull the frame out.

Front plate

The front plate has, at its lower part, three pins which are attached to brackets on the front member. Between pins and brackets, there are rubber spacers. Inside each decor frame, there is a screw and a clamp, which retain the front plate to the wheel housing.
At its upper edge, the front plate is attached to each fender and wheel housing stay with a screw. At removal, first loosen the decor frames, and the screws retaining the front plate. Then loosen the hood lock control from the dash panel and the wheel housing stay. Loosen the connectors from the headlights. Move the front plate forward, and lift it out of the brackets.
Installation is made in the corresponding way.

Grill

The grill consists of three parts, attached to the front plate with selftapping screws. All the parts are within easy reach from the front.

REMOVAL OF SCREWS, FRONT PANEL

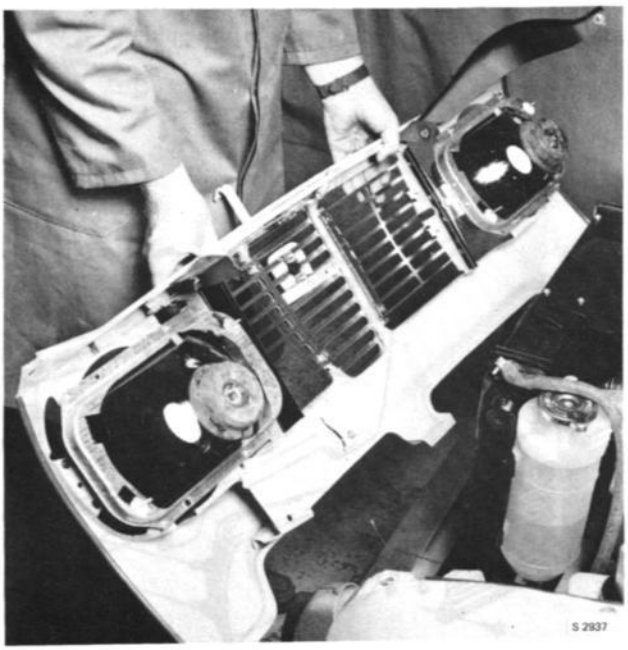

REMOVAL OF FRONT PANEL

FRONT PLATE WITH HEADLAMP WIPERS AS FROM MODEL 1971

Disassembly

1. To remove the front plate first loosen the decor frames. Loose the headlamp washer hoses from the jets and the cable connections from the headlamps. Unscrew the front plate retaining screws. Loosen the radiator stays from the body, the radiator suspension straps and the hood lock control wire.
2. Unscrew the lower screw for the expansion tank bracket a few turns and fold the bracket rearwards so that the wiper motor goes free. Remove the cables from the wiper motor. Note the respective cables connection.
3. Move the front plate forwards and lift it out of the brackets.

Installation is made in the reverse order. See to it that the rubber strips in the ends of the front plate are fitted and that the plate is correctly positioned in the guides.

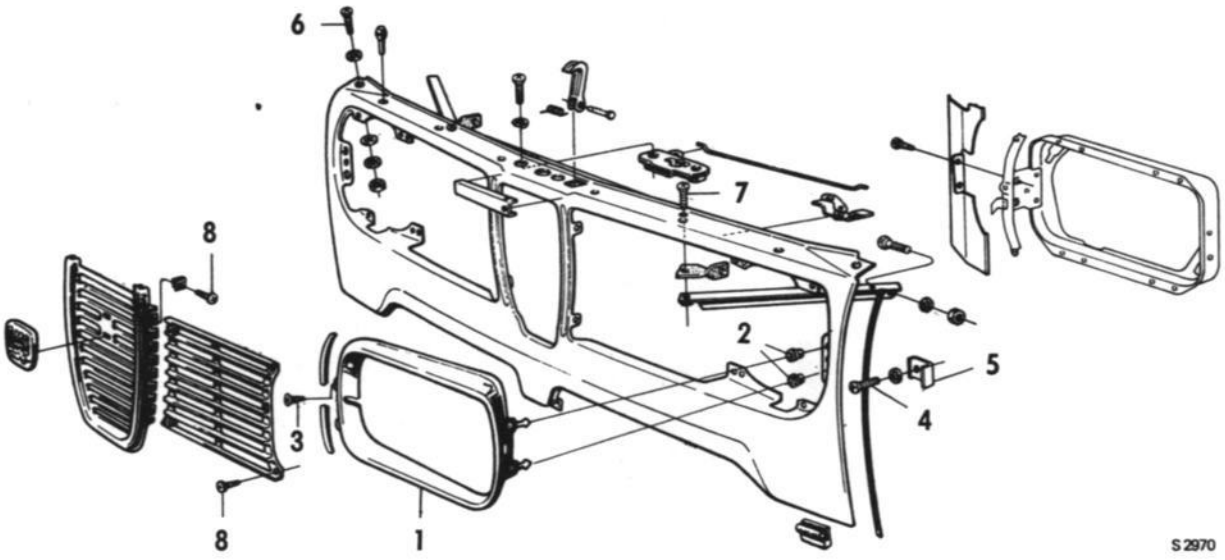

FRONT PLATE WITH GRILL

1. Decor frame
2. Rubber bushings
3. Selftapping screw, decor frame
4. Fixing screw for front plate
5. Clamp
6. Fixing screw, fender
7. Fixing screw, wheel housing stay
8. Selftapping screw for grill plate

FENDERS

After considerable mileage, especially on gravel roads, the underseal composition may be worn away at exposed points, and should therefore be examined at regular intervals and touched up as required. The rear fenders are particularly exposed to the effects of flying gravel and stones.

Removal

When removing the rear left fender, plug the fuel filler pipe with a piece of clean linen rag to prevent dirt from entering the fuel tank during the course of the work, when the cap is removed.

1. Take off the wheel.
2. Back off and remove the fender retaining screws, starting at C and D. See fig.
3. Disconnect the electrical cables as necessary, and then back off and remove the screws at B.
4. Release and remove the fender, collecting the tadpole sealing bead.

Installation

After having treated the fender with underseal composition and refitted the moldings, lights and possible rubber grommet (left rear fender), reinstall as follows:

1. Locate the fender and tandpole sealing bead in position and insert screws B and C.
2. Align corner A and tighten screws B and C enough to retain the fender firmly while permitting further alignment if necessary.
3. Insert the remaining screws.
4. Check the fender alignment and tighten all the screws finally, but not so hard as to buckle the fender panel at the tadpole sealing bead.
5. Reconnect cables, as applicable, and refit the cable sleeves. Pass the filler pipe through the rubber grommet and screw on the filler cap after removing the linen rag or similar plugging material. Tighten the clamps, if previously slackened.
6. Cut off surplus tadpole sealing bead below the fender and refit the wheel.

The clearance between the front fender and the door can be adjusted by removing the fender and hammering the vertical panel to which the fender is attached forwards or rearwards as necessary.

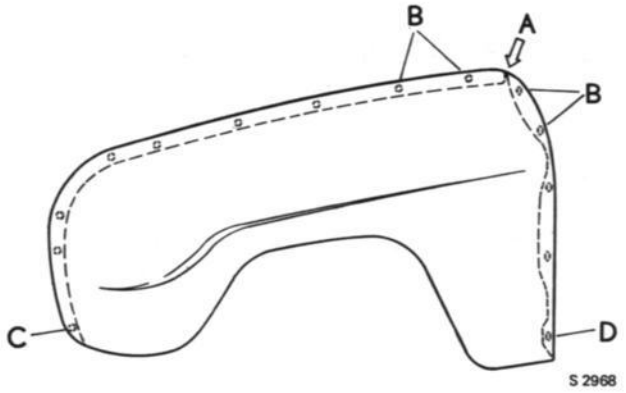

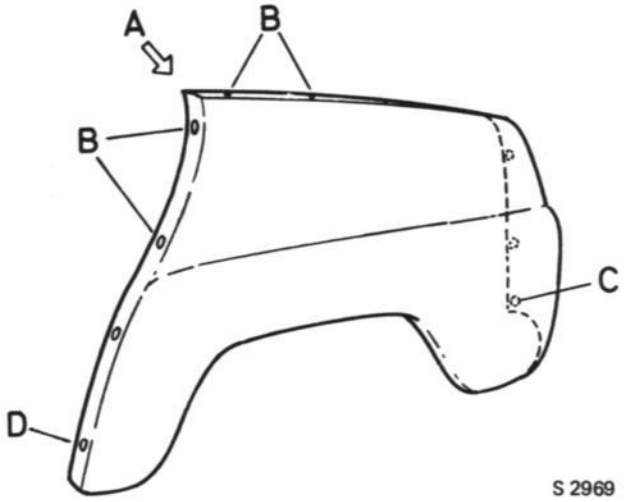

DISASSEMBLY AND REASSEMBLY OF FENDERS, SAAB 96

NEW TYPE OF LEFT REAR FENDER

In 1970 and later models the fuel filler tube opening in the left rear fender is located lower down than in earlier models. Only the new type of rear fender is available for replacements. A new filler tube has therefore been produced for SAAB 95 cars up to and incl. chassis No. 95.010.115, while for other cars with chassis numbers in the ranges quoted above an adapter set has been made up containing parts for the new filler tube that are neded to be able to fit fenders of the new type to older cars. Where replacements for the old type of fender are needed, you should order the new fender plus the appropriate adapter set. For SAAB 95 up to and incl. chassis No. 95.010.115 order only the new filler tube.

Directions for fitting new left rear fender and filler tube adapter set to cars up to and incl. model 1969

1. Remove the old fender. Clean the wheel housing to prevent dirt from entering the fuel tank.
2. Remove the filler tube and connecting hose. Leave the vent tube connecting hose in place on the vent tube of the tank.
3. Fit a plastic plug into the small vent tube of the new filler tube. Connect the filler hose between the fuel tank and filler tube, using the existing hose clamps. Fit the vent tube and connecting tube.
4. Mount the fender. Spread a string of sealant between the filler tube flange and the fender, and tighten the flange and holder with the four self-tapping screws. Fit the filler cap.
   NOTE! Use only the old type of filler cap (with ventilation). See sketch.

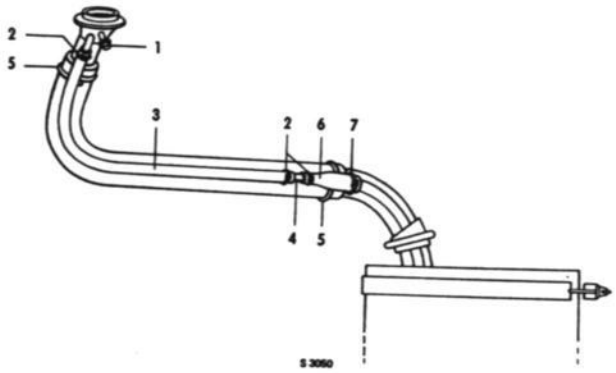

CONNECTING FILLER TUBE TO FUEL TANK

1. Plastic plug
2. Hose clamp
3. Vent hose
4. Connecting tube
5. Hose clamp
6. Connecting hose
7. Hose clamp

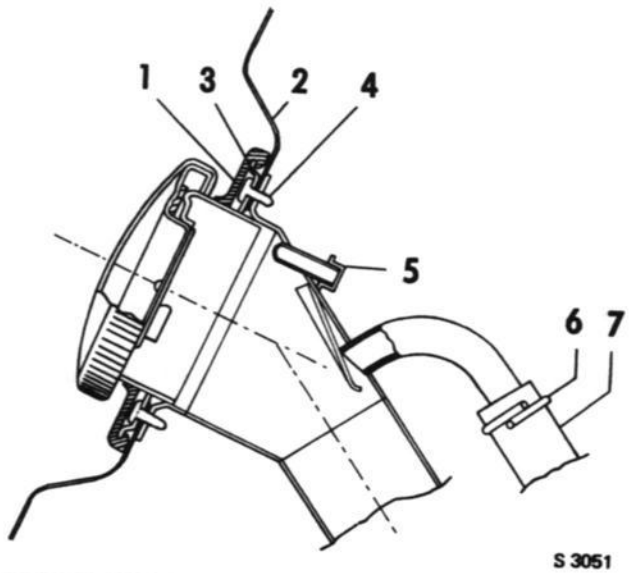

CONNECTING FILLER TUBE TO REAR FENDER

1. Sealing collar
2. Fender
3. Holder
4. Philips screw
5. Plastic plug
6. Hose clamp
7. Vent hose

DOORS

Removal of door

1. Remove the interior door trim.
2. Release the door stop by driving out the pin at the upper hinge.
3. Let the door rest on a suitable support or suspend it in a suitable way in order to relieve the hinges of its weight.
4. Bend back the locking tabs for the externally sited nuts.
5. Back off the two nuts, accessible from inside the door, and remove the door.

> NOTE
>
> Be careful not to damage the outside of the door with the tools used to release the nuts.

6. Remove the hinges from the body.

Installation and adjustment of door

1. Refit the hinges to the body, if previously removed. Also fit the inner locking nuts on the hinge pivot pins.
2. Block up or suspend the door in the correct position and pass it onto the hinge pivot pins.
3. Refit the washers and hinge nuts inside the door.
4. Check carefully to see if the door fits properly into the opening.

> NOTE
>
> Be careful not to damage the front fender when opening the door without the door stop being fitted.

5. Adjust the door in the longitudinal direction of the car by advancing or backing off the nuts a little at a time. To adjust the vertical position of the door, move it up or down in the elongated holes after loosening the nuts slightly.
6. When the door is correctly positioned and fits snugly against the weather strips, tighten the nuts and secure with the locking tabs.
7. Refit the door-stop pin and the interior trim.

INSTALLING A DOOR

Removal and installation of window regulator

1. Removel the inside door handle, window regulator crank and door trim.
2. Back off the four screws accessible through the holes in the toothed segment of the window regulator, holding the window pane in position meanwhile.
3. Release the control-arm pin from the retainer groove and remove the window regulator.

To reinstall the window regulator, proceed in the reverse order to that given above.

Replacement of door lock

1. Close the door window.
2. Remove the interior door trim.
3. Unscrew the inside lock retainer.
4. Back off and remove the six door-lock retaining screws, four on the back of the door and three on the inside, and unscrew the button used to lock the door.
5. Release and remove the lock.
6. If necessary, the outside door handle can be removed by backing off and removing the two retaining screws, one inside and one on the back of the door.

To reinstall the door handle and door lock, proceed in the reverse order to that given above. Before refitting, check that the moving parts of the lock, and the lock springs, are well lubricated with SAAB Special Chassis Grease.

Check that a clearance of 0.004—0.02 in. (0.1—0.5 mm) is maintained when the button in the outside door handle is depressed. To adjust this clearance, lightly file the arm on the handle button.

After refitting the door, adjust the striker plate so that the door opens and closes easily. Check also that the teeth mesh satisfactorily in all positions.

Adjustment of door striker plate

The striker plate is adjustable and can be moved if the screws are slackened. Adjust the striker plate so that the door opens and closes easily without being forced up or down by the location of the plate. Make sure that the teeth mesh satisfactorily in all positions. Tighten the striker-plate screws firmly to prevent them from working loose.

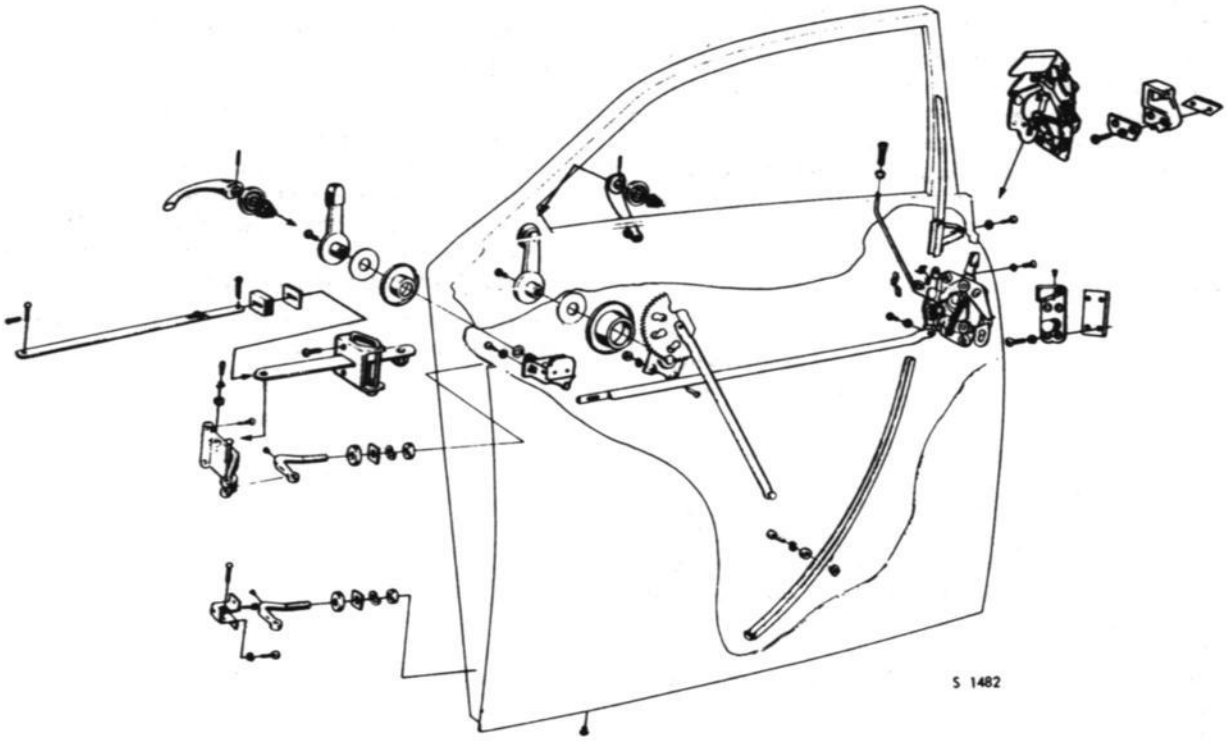

DOOR WITH LOCK, HINGES AND WINDOW REGULATOR

Parts fixed to or located next to the door refer to model 1968.

Replacement of door lock cylinder

After removing the interior door trim, take off the outside door handle by removing the two retaining screws, one inside and one on the front of the door. Then disassemble and reassemble the door handle as described in the following.

Disassembly

1. Depress the pushbutton 7 and drive out the pin 2 with a driver (max. 0.12 in. or 3 mm). Remove the arm and the washers 3 and 4.
2. Remove the pushbutton and the spring 5.
3. Press the pushbutton out of the sleeve 6.
4. Insert the key and turn it 35° to the right.
5. Press the catch pin 8 in with a driver (max. 0.12 in. or 3 mm).
6. Pull the lock cylinder 9 out of the pushbutton.
   If the key has been lost, the catch pin can be driven into the lock cylinder by force, using a driver or pin (with a diameter of max. 0.12 in. or 3 mm), thus enabling the cylinder to be removed from the pushbutton. This treatment ruins the lock cylinder and a new one must therefore be fitted.

Reassembly

1. Drive in the catch pin and press the lock cylinder into the pushbutton.
2. Ease the sleeve onto the pushbutton and then fit the pushbutton, together with the spring, in the handle.
3. Insert the arm and the washers and drive in the pin. Note that the two washers have different sizes of holes.

Spare parts

If a lock cylinder for a door, luggage-compartment or ignition lock is damaged, a new lock cylinder can be ordered, in which case the key number and spare-part number must be quoted (see Spare Parts List). The system whereby only one key is used for all the car locks can thus be retained without any necessity of replacing a complete lock kit.

Lubrication

If the lock cylinder is lubricated with oil or grease, the lock pins may get caught in the cylinder. The reason for this is that dirt adheres to the key and thus gets into the lock cylinder. Because of this, the lock cylinder itself should never be lubricated.
If the key moves stiffly in the lock, so that lubrication is called for, a little glycerine may be applied to the back of the key. NOTE! Never lubricate the indented side of the key. After lubricating in this way, turn the key back and forth a few times.

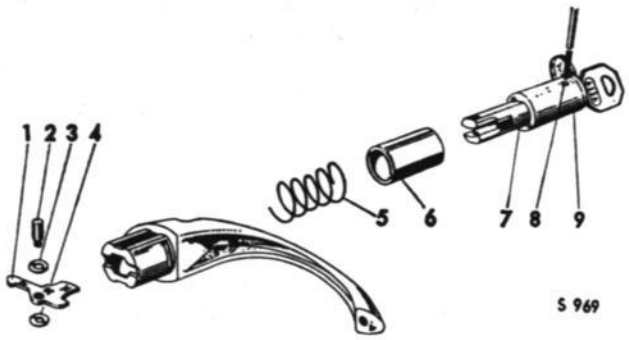

DOOR HANDLE AS FROM MODEL 1967

1. Arm
2. Pin
3. Washer
4. Washer
5. Spring
6. Sleeve
7. Pushbutton
8. Catch pin
9. Lock cylinder

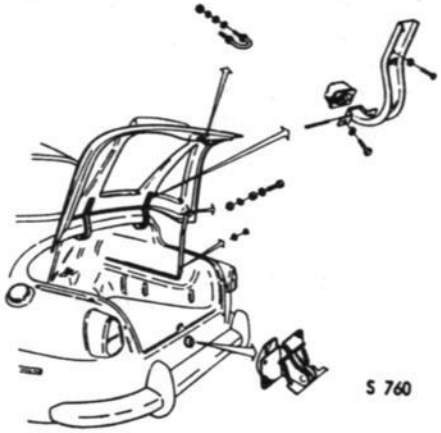

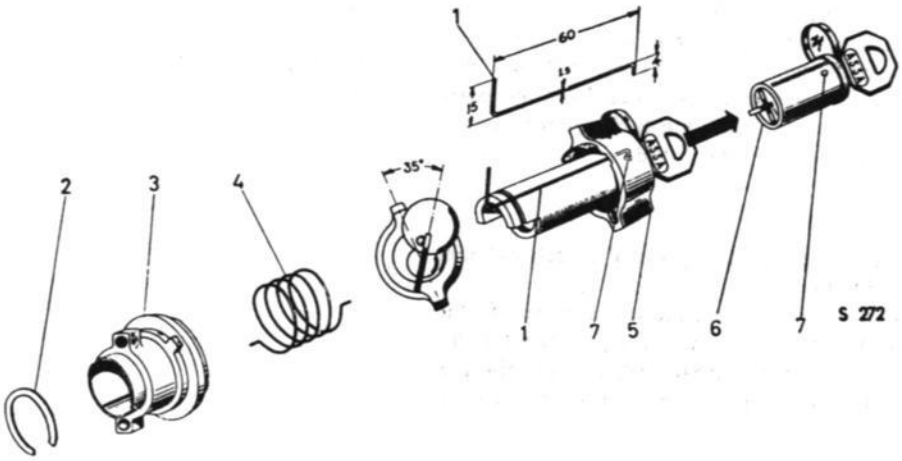

REAR COMPARTMENT LID WITH ASSEMBLY DETAILS AND LOCK

1. Wire picklock
2. Retaining ring
3. Housing
4. Spring
5. Sleeve
6. Lock cylinder
7. Catch pin

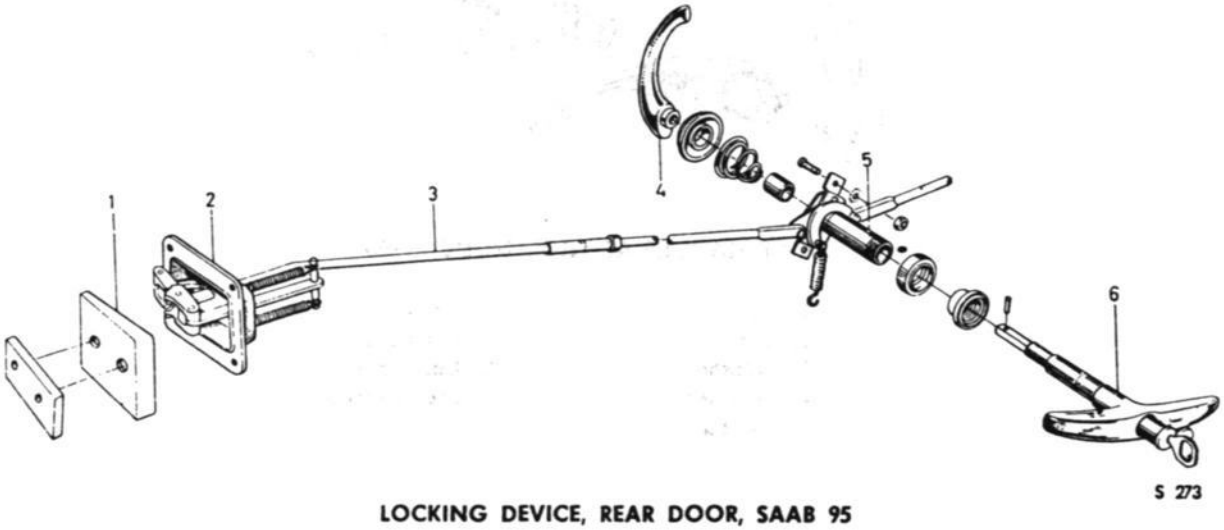

LOCKING DEVICE, REAR DOOR, SAAB 95

1. Locking plate
2. Door lock
3. Switch rod, adjustable
4. Inner handle
5. Latch
6. Outside handle

LUGGAGE COMPARTMENT AND REAR DOOR

Replacement of luggage-compartment lock Saab 96

Disassembly

1. Remove the lock from the car.
2. Make a wire picklock 1 to the dimensions shown in the fig.
3. Remove the retaining ring 2.
4. Remove the housing 3 and the torsion spring 4.
5. Turn the key 35° to the right.
6. Pass the picklock in towards the locking pin 7, turning to force the latter in towards the cylinder.
7. Withdraw the cylinder 6 from the lock.

Reassembly

1. Press the locking pin 7 into the lock cylinder 6 and insert the cylinder in the sleeve 5. Note: this can be done only when the key has been turned 35° to the right.
2. Refit the torsion spring 4 and the housing 3, making sure that the spring is inserted in the smallest of the notches in the sleeve and in the hole in the housing.
3. Refit the retaining ring 2.
4. Refit the lock on the car.

Rear-door lock Saab 95

Removal of the door trim provides access to the lock mechanism and to the outside handle with lock cylinder for removal. The striker plate should be adjusted in the same way as those for the front doors.
Note that the rear door must always be closed carefully without "banging", with the handle in the closing position, i.e. twisted slightly to the right. When the lock levers have engaged with the lock plates and pressed the door in against the weather strips, turn the handle back to the horizontal position.

Removal and replacement of luggage-compartment lid Saab 96 and Monte Carlo

1. Raise the luggage-compartment lid and detach the stay.
2. Disconned the wires to the number plate lights and trunk lamp.
3. Back off and remove the hinge retaining screws on the lid and lift off the lid.

> NOTE
>
> Take care to avoid damaging the body paintwork when removing and replacing the luggage-compartment lid.

4. Replace the lid, proceeding in the reverse order.

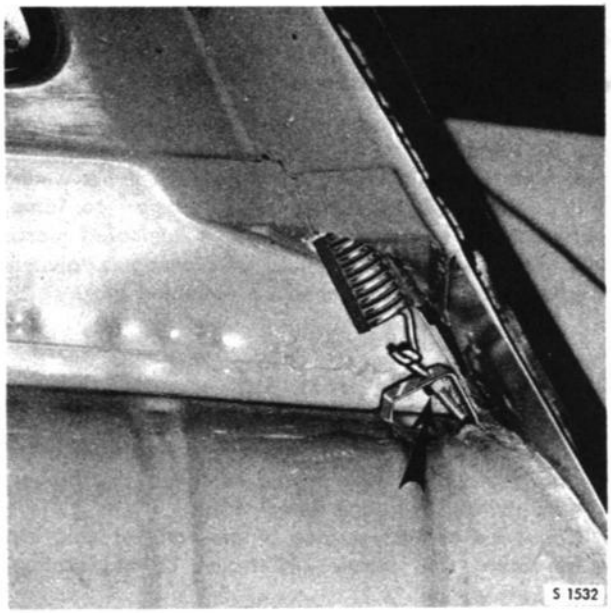

ADJUSTMENT NUT FOR TENSION OF TAILGATE BALANCE SPRINGS, SAAB 95

Rear door, Saab 95

Adjustment of balance spring tension

The rear door on the Saab 95 is fitted with two balance springs, the tension of which can be adjusted with a nut — see fig. The spring, which is accessible after removal of the trim between the rear door and the quarter window, should be tightened hard enough for the door to stop in any position after opening.

Removal and installation of tailgate Saab 95

1. Open the tailgate.
2. Remove the sealing strip between tailgate and body by loosening and removing the self- tapping screws in the upper edge of the tailgate.
3. Remove the retaining screw in each hinge which are accesible when the tailgate is open.
4. Remove the lever of the door lift from the gate by removing the nuts. Be careful when removing the lever as is spring loaded.
5. Close the tailgate.
6. Remove the attachment screws of the remaining hinges.
7. Remove the tailgate.
8. Installation is made in the opposite way.

GLASS

Window-glass, general

All windows are made of toughened glass, a safety zone being provided in front of the driver, thus enabling him to see clearly in the driving direction even if the windshield is shattered. Cars intended for export to some countries, however, have windshield of laminated glass. When installing new windshield and windows, alvays use safety glass, i.e. toughened or laminated glass.

Replacement of windshield

1. Remove the windshield-wiper arms.
2. Press the windshield outwards with the hand from inside the car, after having removed the rubber weather strip from the bodywork.
3. Clean the contact surface of the weather strip on the body, and remove all traces of old sealing compound.
4. Fit a new weather strip to the windshield. Be sure to locate the weather-strip joint (possibly marked with a yellow dot) in the middle of the lower edge of the windshield.
5. Press the trim molding deep into its groove, using the thumb, and fit the two joint clips.
6. Insert a leather thong in the slit in the rubber weather strip. The ends of the thong are to be centered on the upper edge of the windshield.
7. Coat the body opening and the weather strip with soapy water and put the windshield in position, holding it there by, or the aid of an assistant.
8. From inside the car, pull the leather thong so that the edge of the weather strip is drawn over the edge of the panelling. Pull left and right sides alternately, while an assistant presses the glass from outside and successively, with great care, pounds the rubber weather strip with a rubber mallet.
9. Check that the inside flange of the weather strip is inside the edge of the bodywork all round the windshield. Strike molding gently with a rubber mallet so that its flange homes properly. Slide the joint clips into place.
10. Inject sealing compound both between the weather strip and the body and between the weather strip and the glass. See fig.
11. Remove excess sealing compound from the body and glass, using kerosene or a similar solvent, and rinse thoroughly with water afterwards.

REMOVAL OF WINDSHIELD

FITTING WINDSHIELD STRIP WITH LEATHER THONG

Replacement of rear window

The rear window is replaced in the same manner as the windshield, although the shelf over the luggage compartment must be removed first.

Opening side windows (quarter windows)

Opening side windows are fitted on some types. The only spare part available is the window glass complete with frame.

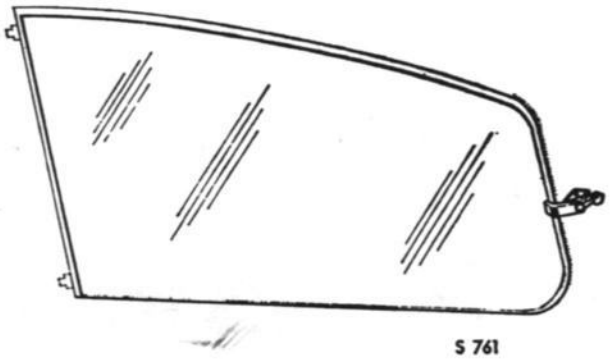

S 761

OPENING SIDE WINDOW, SAAB SPORT AND MONTE CARLO

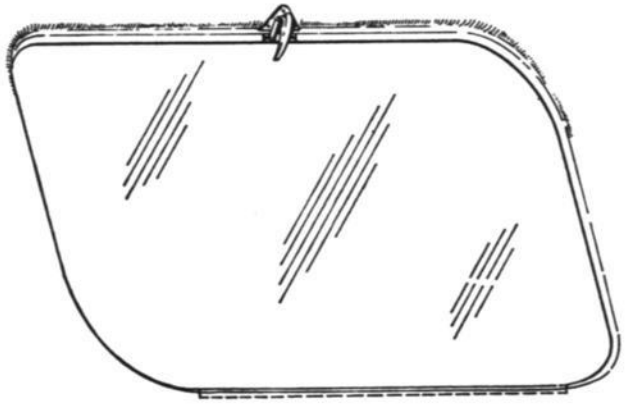

S 762

OPENING SIDE WINDOW, SAAB 95

Replacement of door window

The bottom of the door window glass is pressed into a retainer channel with a slot for the window-regulator winder arm. A hinge is fitted to the front end of the retainer channel and secured to the door frame by means of two screws. A run channel guides the rear edge of the window glass.

Removal

1. Wind down the window until its rear edge is just below the weather seal.
2. Back off the two screws at the hinge.
3. Twist the glass to bring its rear edge upwards and in towards the car.
4. Pull up the glass as shown in the fig.
5. Release the glass from the retainer channel, if necessary.

Installation

Installation, as well as removal, can be done without removing the interior door trim, but is nevertheless facilitated if the trim is taken off.

1. Fit the rubber inserts in the glass retainer channel and press the glass firmly into the channel. Make sure that the retainer holds the glass firmly.
2. Lower the glass at an angle from inside the door and with the hinge at the bottom. At the same time, guide the window-regulator pin into the slot.
3. Now twist the glass to bring the hinge up into position, moving the glass rearwards at the same time so that it enters the run channel.
4. Insert the two hinge screws and wind up the window.
5. Adjust the window at the hinge so that it fits snugly in the run channel without smooth operation being impeded. Having done this, tighten the two hinge screws up finally.

Replacement of quarter windows

1. Press the glass outwards from the inside, meanwhile turning up the inside flange of the rubber weather strip. Begin at the rear edge of the window.
2. Fit a new pane of glass of the prescribed quality in the weather strip. Insert a leather thong in the slit in the weather strip, with the ends at the rear part.
3. Pull the glass and weather strip into position with the aid of the leather thong in the same way as described for the windshield. Start at the rear edge of the glass.

REMOVAL AND INSTALLATION OF DOOR GLASS

TRIMS AND INTERIOR FITMENTS

Door and side trims

The door trims and side trims are stretched over sheets of porous wallboard. They are attached to the doors and body, as applicable, by means of spring clips of conventional type. These trims are readily removable for replacement or for such purposes as inspection of the inside of the door.

Door pillar trim

The door pillars in the SAAB 96 and Monte Carlo are fitted with trim. The trim is fastened with tape carrying adhesive on both sides. See figure.

INSTALLATION OF DOOR PILLAR TRIM FROM THE 1967 MODEL

Cowl plate trim

The cardboard cowl plate trim is secured to the cowl plate with sheet-metal screws and spring clips. Insulation against sound and heat is afforded by a thick quilt of glass fiber between the cowl plate and the trim.

Mats

The rubber mats at the front sides are glued to the wheel houses, while the front and rear mats are loose.
Insulating sheets of wallboard covered with waffle-pattern cardboard are fitted under the floor mats.

HEADLING SAAB 96

The headlining is stretched on piano-wire bows, and retained in the following way: the cloth is wrapped round the upper edges of the frames for the windshield-, side- and rear window strips, using tape with adhesive on both sides when fastening.

Fitting and removal

First fit tape carrying adhesive on both sides, round the upper edges of all the window frames and to the upper edge of the door frames. Hang the headlining on to the bows.

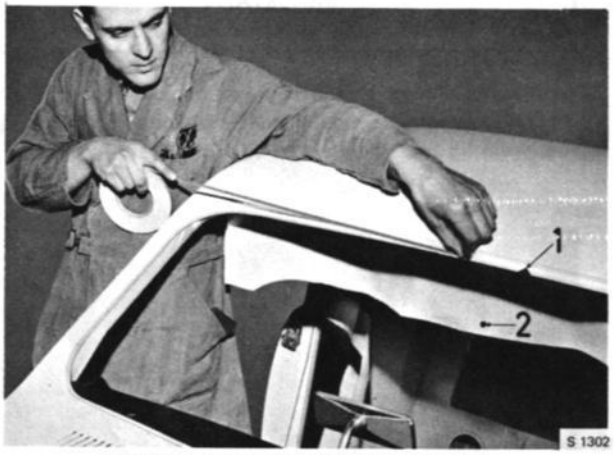

FITTING DOUBBLE ADHESIVE TAPE

1. Middle mark in the roof
2. Middle mark in the headlining

Start with the rear bow, and hang this on to the rear door pillar, with the free ends of the bow pointing forward. Then proceed forward, hanging the other bows on in the same way and making sure that the first bow comes as near as possible to the windshield frame.
Fit the headlining to the windshield frame, starting at the centre mark, see figure, and proceeding towards the side. Stretch the headlining a little. The outer edge of the headlining shall end approx. at the score in the windshield pillar trim. Pull the headlining backwards in the following way: with one hand grip the last bow and pull backwards, and at the same time, with the other hand, stretch bow by bow backwards. Make sure that the headlining stretches evenly. This is done by comparing the distance between the seam at the rear border of the headlining and the welding seam between roof and side sheet. If necessary, the headlining can be stretched with the last bow.

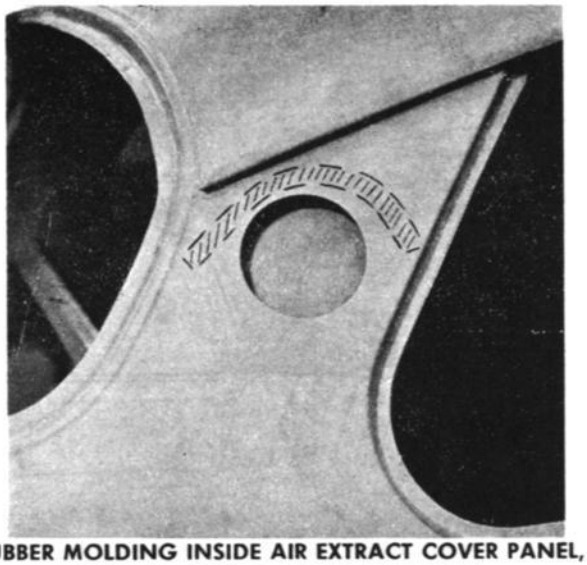

RUBBER MOLDING INSIDE AIR EXTRACT COVER PANEL, SAAB 96 (COVER PANEL REMOVED)

IMPORTANT
Do not stretch from the headlining's border.

Fit the headlining to the rear windshield frame, starting at the seam on the side, thereby placing the seam upon the welding seam between roof and side sheet. Then

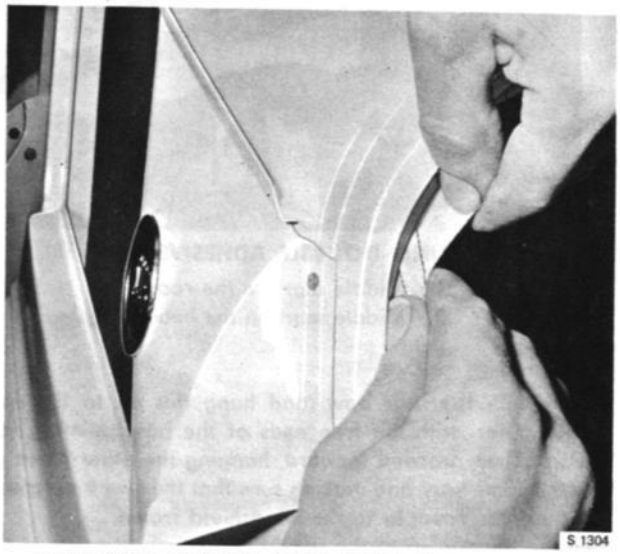

LOCATION OF SIDE SEAM OVER THE WELDING SEAM BETWEEN ROOF AND SIDE VALANCE

fasten the headlining on towards the middle, and check at the centre mark that the headlining is correctly positioned. Go into the car, and check that the headlining is centred on each bow, before you raise same.
Raise all the bows, and insert the dome lamp cables through the hole in the headlining.
Fit the headlining to the side, starting at the last bow. Place the seam for the last bow in the side window frame's rear corner, and fit as far as the door pillar.
Make sure that the recess for the door pillar be correctly positioned. Proceed fitting the headlining as far as to the windshield pillar. Make sure that there are no wrinkles at the windshield pillar.
Now, stretch the headlining round the lower edge of the rear indow in such a way that there are no wrinkles.
Then fasten with tape, as described before.
Fit the headlining at the rear gross bar, and make sure that the holes in the headlining and those in the sheet are centred on each other.

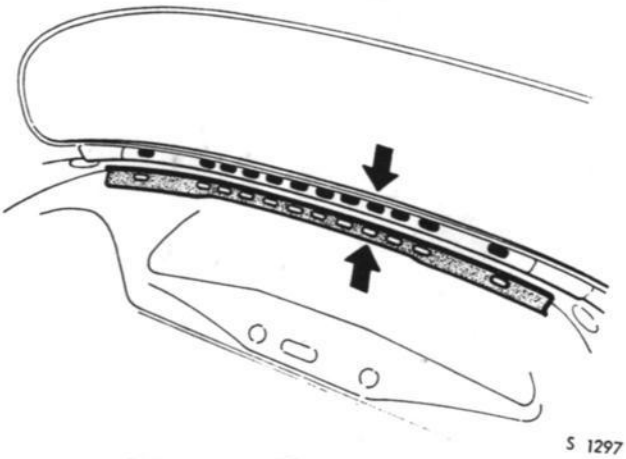

INSTALLATION OF MOULDING AT THE REAR CROSS BAR

Fit the rear shelf, windows, sun visors, dome lamp, curve loop brackets, side trims, and rear seat cushion with back rest.
The removal is made in the reverse order.

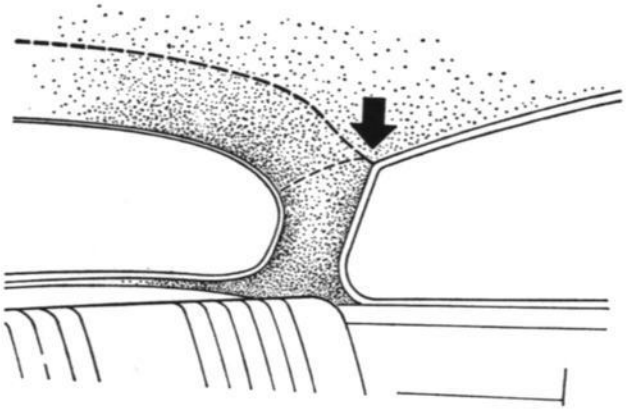

PLACEMENT OF SEAM AT REAR BOW

HEADLINING, SAAB 95

Removal and installation

To install, first attach the headlining to the three hooks in the upper part of the windshield frame. Then stretch the lining rearwards while putting on the bows. Using tool No. 784096, fit the rear edge of the headlining over the three hooks. Finally, stretch the longitudinal wire spirals. These are divided in the middle and fitted with hooks. Using two double-folded steel wires, get hold of these hooks and hook them into one another. See fig. Disassemble in the reverse order.

As from model 1971 there is a crash pad in the form of a plastic strip fitted on the inner edge around the roof.

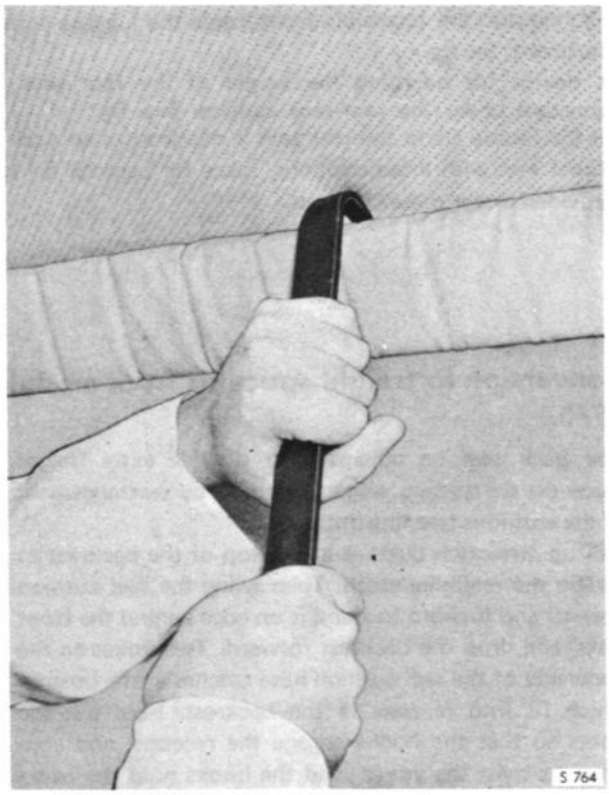

INSTALLATION OF HEADLINING, SAAB 95

STRETCHING THE WIRE SPIRALS, SAAB 95

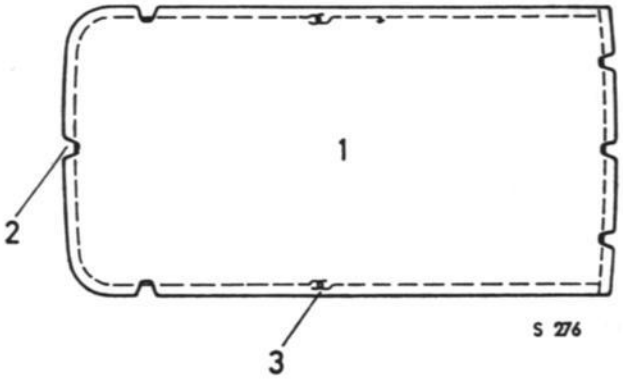

HEADLINING, SAAB 95

1. Headlining
2. Retainer
3. Wire spiral with hooks

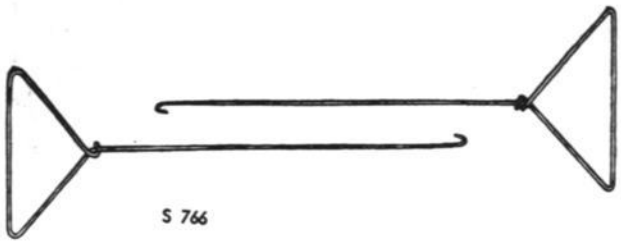

ASSEMBLY HOOKS FOR STRETCHING OF SPIRALS

SEATS

Front seats

The front seats are made of resilient steel tubing with foam-rubber cushions and covers fitted on transverse coil springs. The front seats are adjustable for legroom, and are secured in the desired position by means of a readily accessible, spring-loaded latch. The slope of the seat back can be altered with a lever located between the seat and the door. Wedge-shaped wooden blocks are fitted under the seats, thus affording a higher sitting position for the driver. To prevent the back of the right-hand seat from being jack-knifed in response to sudden application of the brakes, a special safety catch is fitted at the rear left side of this seat. As from model 1969, a new type of safety catch is introduced. The front seats are also equipped with sockets for fitting of headrests. Headrests and cushions to fit them are available as optional extras. The Monte Carlo is fitted with more comfortable seats, the backs of which may be dropped fully to the rear. The passenger seat is also equipped with a headrest.

Removal of front seats

1. Lift up or take out the rear-seat cushion.
2. Depress the seat-adjustment catch and slide the seat back until the seat rails are clear of the floor rails, after which the seat can be removed.

The seat floor rails should be inspected at regular intervals, to make sure that the retaining bolts are tight and that the rails are not laterally displaced. If the seats move stiffly, grease the upper rails.

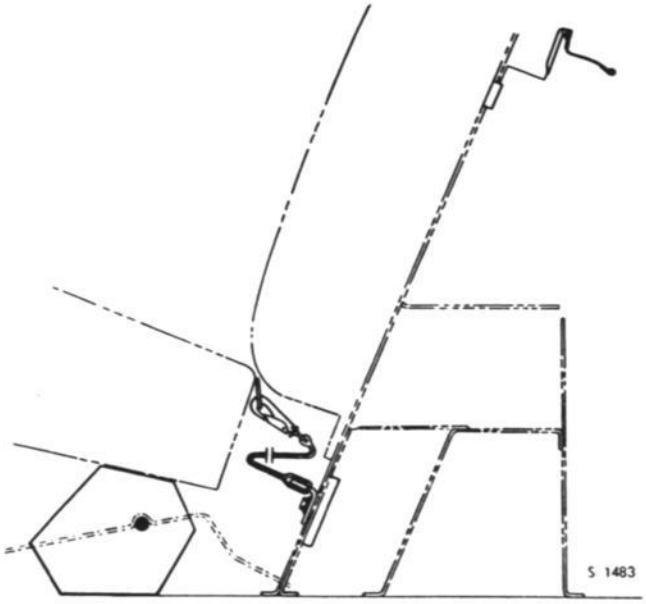

LOCKING DEVICE FOR CUSHIONS, REAR SEAT, SAAB 96

Rear seat Saab 96 up to and incl. model 1969

In the Saab 96, the rear-seat cushion and back consist of a spring-filled frame with padding and upholstery. Both cushions have a sheet of plywood as the base. Up to and incl. the 1967 model, the seat cushion is loose, being held in position by the transverse floor member at its front edge. The base of the back cushion rests on two brackets secured to the inclined rear panel. This cushion is also secured at the top, to prevent objects in the luggage compartment from rushing forwards when the brakes are applied hastily.

From model 1968 on, the seat cushion in the Saab 96 is secured to the floor with a strap. The back cushion is secured with two pins on the back of the cushion. The locking pins are accessible from inside the luggage compartment, see fig.

A device for adjusting the height of the rear seat is provided under the rear-seat cushion. See fig.

In the Monte Carlo the rear seat is designed as an occacional seat with loose cushions, space for baggage being provided under these cushions.

Conversion to freight space as from model 1970.

The back seat be collapsed to provide extra freight space on the station wagon principle by rearrangement of the cushions (see illustration).

Pull up the catch buttons at the top of the backrest to release the retaining catch. Then swing the seat cushion upward and forward to stand it on edge behind the front seats, and drop the backrest forward. Two yokes on the underside of the seat cushion have catches at the bottom which fit into recesses in the backrest. Fold out the yokes so that the hooks engage the recesses, and continue to twist the yokes until the hooks hold the backrest securely.

CONVERSION TO FREIGHT SPACE

Rear seat and auxiliary jump seat Saab 95

In the Saab 95, the two rear seats are made of foam rubber on a base which serves as a luggage deck when the seats are folded down. The rear seat cushion has a safety catch in the front edge, see fig. The backrest cushion is

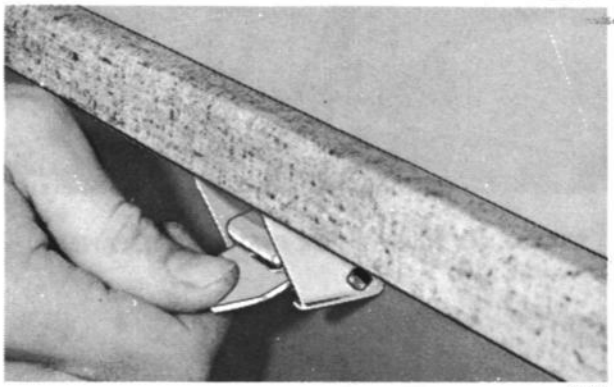

S 1414

LOCKING DEVICE FOR CUSHION REAR SEAT, SAAB 95

locked by means of a lock mechanism in each end. The lock mechanisms are released by pulling up the buttons in the upper edge of the seat rest.

The auxiliary jump seat backrest is kept upright by two rubber straps fitted to the upper edge of the rear seat backrest.
As from model 1971 is it possible to use the auxiliary jump seat even when the rear seat is folded down and used as luggage space. This is obtained by two catches in the lower edge of the back rest.
In folded-up position the catch holds a locking pin. The catch is released by pressing down the knob of the lever.

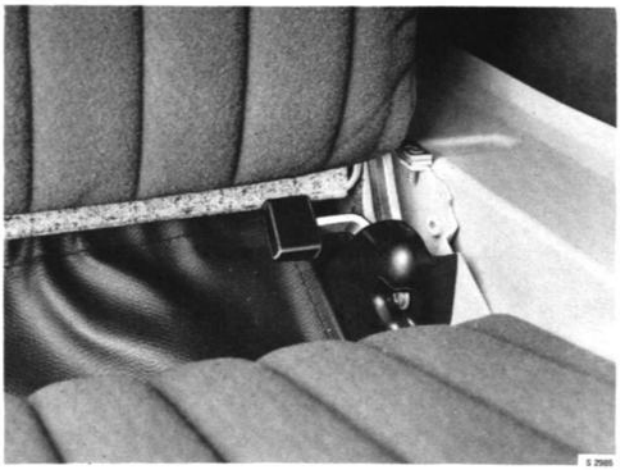

CATCH, AUXILIARY JUMP SEAT, SAAB 95

Cleaning upholstery

When attempting to remove stains from fabrics of any kind it is recommended that the area adjacent to the stain first be moistened with the solvent before working on the stain itself. Otherwise, a soil ring may be left around the cleaned spot.

Specific stains

Grease, oil and lipstick can be removed with carbon tetrachloride. Large stains are best dealt with by moistening in the normal manner and then pouring solvent over the entire stain and soaking it up with blotting paper.
Chocolate, ice-cream, fruit and vomit stains should be treated initially with lukewarm water, possibly with the addition of a little soap solution. After drying, any residual stains may be removed with carbon tetrachloride.
Battery acid should be treated instantly with large quantities of cold water, as otherwise the acid may burn holes in the upholstery. If possible, add a few drops of ammonia to the first water.
Blood stains should never be allowed to dry, but should be removed immediately with cold water.

Unidentified stains

Try the following solvents in the order named:

Cold or lukewarm water
Lukewarm soap solution

Before making further attempts, remove the soap solution with lukewarm water and allow the material to dry, since the following solvents are not miscible with water.

Continue with

Carbon tetrachloride
Trichloroethylene
Pure gasoline

Rub the spot while the solvent evaporates, first hard and gradually more gently as evaporation continues.
Do not forget the initial moistening round the stain. The bigger the stain, the bigger the area to be moistened.
Lighter fluid can be used instead of carbon tetrachloride.

Cleaning plasticized fabrics

Plasticized fabrics are impermeable to dirt, being completely dust-tight and proof against oil and gasoline. A dirty plastic surface can easily be cleaned by washing with water and a synthetic detergent. Large oil stains, etc., can be treated with white spirit, trichloroethylene and similar solvents. Such organic solvents, however, should not be used too frequently, as they tend to cause stiffness in the plastic.

INSTRUMENT PANEL

Removal and installation

1. Remove the end fairings by backing-off the sheet-metal screws and releasing the clips.
2. Release from the point of attachment to the body the brace located in the center of the instrument panel.
3. Back off and remove the two screws on either side, collect the rubber spacers and washers, and pull out the instrument panel. See fig.
4. Disconnect cable terminals, speedometer wire and hoses for the defroster and windshield washer.
5. Reinstall in the reverse order.

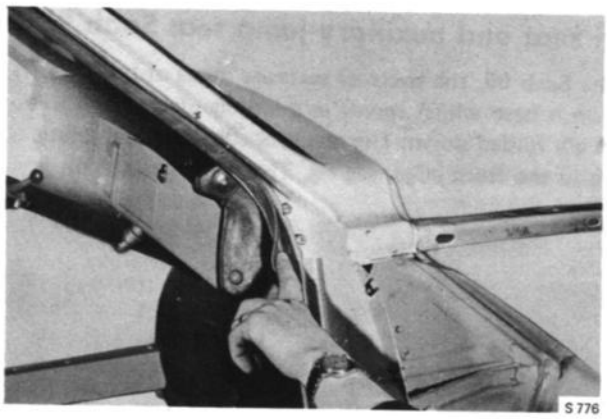

RETAINING SCREWS FOR INSTRUMENT PANEL

Replacement of instrument panel overlay

1. Remove the instrument panel and take off the instruments and glove compartment.
2. Release the lower molding by removing the clips at the rear.
3. Release the clips at the upper edge, which possibly also retain the defroster duct, and remove the overlay from the panel.
4. When refitting, apply glue only to the projecting part of the instrument panel and the corresponding part of the overlay. Then press the overlay in position. See fig.
5. Refit the molding and clips, cutting off the part of the overlay that projects beyond the molding. Do not, however, cut away the part over the opening for the instrument cluster.
6. Refit the instruments and glove compartment.

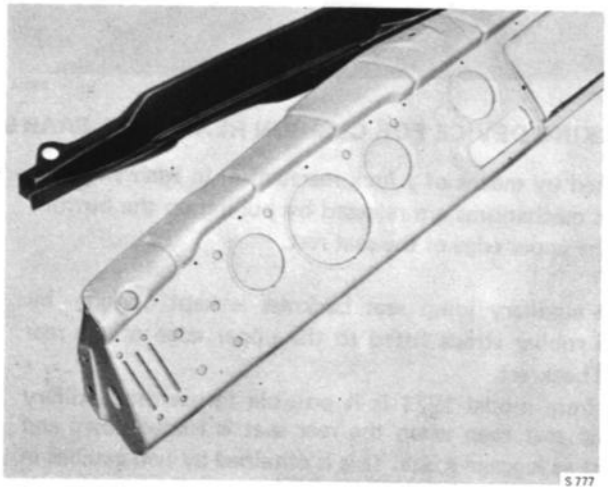

GLUEING ON THE OVERLAY

BUMPERS

Each bumper comprises a middle bar and two outer bars, two overriders and two brackets. In addition, there are two braces for the front bumper and two cork pads to prevent flying stones from attacking the body through the rear overriders.

The component parts of the bumpers are bolted together at the overlap joints between the middle and the outer bars.

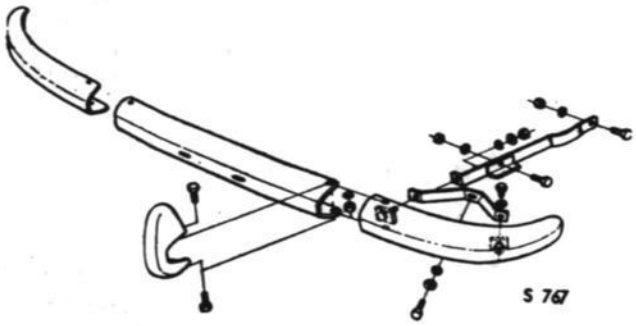

BUMPER, FRONT SAAB 95 AND 96

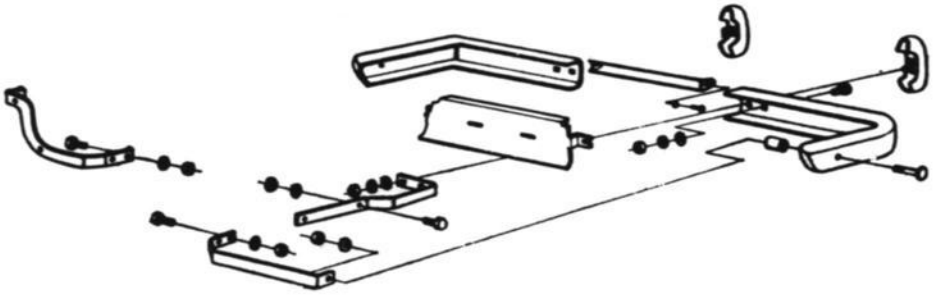

BUMPER, REAR SAAB 95

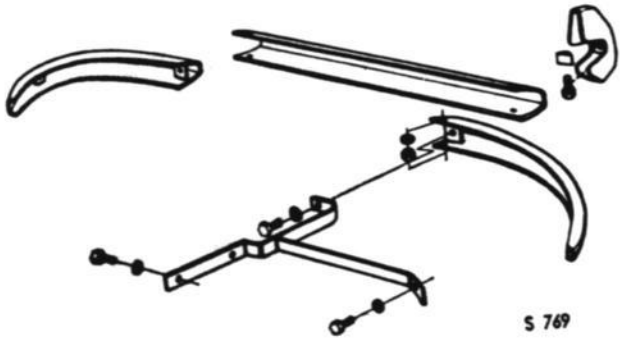

BUMPER, REAR SAAB 96

BODY FINISHING, as from 1971 model.

FROM ASSEMBLY LINE

MANUAL CLEANING
Major accumulations of grease and dirt are removed with a solvent.

→

AUTOMATIC SURFACE TREATMENT IN 6 ZONES

1.	2.	3.	4.	5.	6.
Degreasing with alkaline degreasing agents.	Washing with water.	Washing with water.	ZINC-PHOSPHATIZING Treatment to provide a good adhesion surface for the enamel, which is particularly necessary for body parts liable to be hit by flying stones. Skin thickness approx. 2 μ (1 μ = 0.001 mm).	Washing with water.	Washing with water.

→

WASHING RAMP
Washing with desalted water.

→

DRYING
10 min. at +347° F (175° C).

COOLING ZONE
approx. +105° F (40° C).

PRIMING BY ELECTRO-IMMERSION

Removal of electrodes.	Blowing zone	Washing with desalted water in three stages.	Immersion zone	Electrode insertion
	Blowing with compressed air, automatically and manually.		The body is submerged in a bath containing 12—16 % paint particles and 84—88 % water. The paint is negatively charged so that negatively charged particles migrate and adhere to the positively charged body. The body is thus coated with a layer of paint approx. 25 μ in thickness.	Positive electrodes are applied to the body and auxiliary electrodes to cavities, e.g. sills.

CURING
20 min. at +347° F (175°).

COOLING ZONE
approx. +105° F (40° C).

DRY FLATTING
Checking of the paint layer and adjustment of any flaws.

SEALING
of all body joints with PVC sealing compound.

CLEANING
by blowing air and tack-ragging. Tack-ragging = wiping with gauze.

→

INTERMEDIATE COATING
Automatically and manually. Skin thickness approx. 25 μ.

→

CURING
20 min. at +320—338° F (160—170° C)

COOLING ZONE
approx. +150° F (40° C)

→

UNDERBODY SEALING
Manually and automatically. Cavities are treated with a rust inhibitor containing aluminium pigment.

→

CLEANING
Manually with rags moistened with white spirit.

→

FLATTING
Manual checking and adjustment. Mechanical rubbing with wet grinding paper P600 and P800.

→

WASHING
Manually with water-swept brushes.

→

DRYING
in hot air zone and manually.

→

Body surfaces from which the coat has been rubbed off are treated with vinyl phosphating agent.

→

DRYING
10 min. at +266° F (130° C)

→

CHECKING
Manual checking and adjustment. Blowing clean with compressad air.

→

WASHING
with spirit and tack-ragging.

→

TOP COATING
Manual hot spraying. Skin thickness 35—40 μ

→

CURING
20 min. at 320—338° F (160—170° C)

COOLING ZONE
approx. +105° F (40° C)

→

INSPECTION
Any faults are corrected by adjustment or repainting.

→

INSPECTION
Checking that faults have been corrected.

→

To final assembly line

Technical data, factory paints

PRIMER	
Mode of application	Electro-immersion
Hardening	20 min. at +347° F (175° C)
Manufacturer	AB Wilhelm Beckers Dr Kurt Herberts
Skin thickness after stoving	25 μ
INTERMEDIATE COAT	
Spraying viscosity	35—45 sec. (SIS beaker at 58° F or 20° C)
Mode of application	Hot spraying. Paint temperature approx. 122° F (50° C)
Curing	20 min. at +302° F (150° C)
Supplier	AB Wilhelms Beckers
Skin thickness	30 μ
TOP COAT	
Spraying viscosity	35—40 sec. (SIS beaker at 68° F or 20° C)
Mode of application	Hot spraying at approx. 122° F (50° C)
Curing	20 min. at 302° F (150° C)
Supplier	AB Wilhelm Beckers Dr Kurt Herberts
Skin thickness after stoving (primer + top coat)	70—100 μ (0.07—0.1 mm)

TOUCH UP ENAMEL (FACTORY PAINT WITH ADDED HARDENER AND ENAMEL)

Spraying viscosity	18—22 se. (SIS beaker at 68° F or 20° C)
Mode of application	Cold spraying
Curing	60 min. at +212° F (100° C)
Supplier	AB Wilhelm Beckers Dr Kurt Herberts

TOUCH-UP AND REFINISH INSTRUCTIONS

General

For all touch-up or refinish jobs, use synthetic stoving or airdrying enamel of the same quality type as that for the original paintwork.

For perfect results, it is essential that the premises in which hte work is to be done, i.e. the paintshop, be kept absolutely free of dust. It should also be free of drafts and must naturally not be used as a means of access to other departments. The floor should be kept thoroughly damp while spraying. A paint job ruined by dust cannot be restored by polishing — flatting and respraying will be necessary.

Body finishing

Before undertaking any partial refinishing, always spray a test area to check that the shade used is indentical with the color of the parts that are not to be refinished. Any deviations must be corrected by toning the paint. The painting job involves the following operations:

Removal of rust and old paint
Rubbing down
Cleaning with a solvent
Priming of bare metal surfaces, for instance with wash primer
Filling — if necessary
Flatting
Application of intermediate coat, for instance Surfacer or Non Sanding, if necessary
Flatting, if necessary
Finishing
Air-drying, stoving with infra-red radiant heat or in a drying oven, depending on the type of enamel used.

Cleaning

If the old paintwork shows defects such as cracking, pitting due to the impact of flying stones, etc., apply a paint remover or flatten down to the bare metal. After removal of the old paintwork by one or the other of these methods, degrease the metal with spirit, thinner or some other suitable solvent. In principle, the same procedure should be used even if the old paintwork has merely been rubbed down instead of being removed. Realign any distorted panels and grind, for instance with a disc grinder, if necessary, before flattening with wet abrasive paper P 400. Finally, reclean the parts with spirit or cellulose thinner. Thoroughness in this respect is vital to good adhesion.

Priming

Coat all bared metal surfaces with primer. The drying time and temperature for oven-drying or air-drying should be as prescribed by the paint suppliers. In infra-red radiation lamp may also be used for drying, but care must be taken to keep it at a distance of not less than 16 in. (40 cm) from the metal. After drying, fill as necessary, applying the putty in thin layers and allowing the stipulated drying time for each layer before the next application.

Rubbing down

Rub down the primed and filled surface with wet abrasive paper P 400 and then with grade P 600. After removing all water, rewash the surfaces with spirit or cellulose and wipe with a piece of gauze drenched in slow-drying varnish (tack-ragging).

MEASURING VISCOSITY WITH AN SIS BEAKER

USE OF RADIATION LAMP TO DRY REFINISHED PART

Equipment and procedure for refinishing

A. STOVING TOUCH-UP ENAMEL

OVEN:

A cenvection oven with an air temperature of 194—212° F (90—100° C) is needed. A radiation oven can be used, and in this case the metal temperature should be about 176° F (80° C). It is important for the air temperature to be even throughout the oven and for the temperature to be continuously checked. For this purpose, it is appropriate to use, for example, a calibrated max. and min. thermometer or a thermo-element with a compensator. Only this latter measuring method can be used to check the plafe temperature.

ENAMEL:

Hardener must be added to the touch-up paint used in the amount stipulated by the paint supplier. The enamel can be sprayed either hot or cold, and the viscosity should be adjusted accordingly with the thinner recommended by the paint supplier to the following:
Hot spraying — viscosity approx. 35 sec.
Cold spraying — viscosity approx. 21 sec.
Measure the viscosity with a beaker according to the method described in the Swedish standard SIS 16 00 11 at a temperature of approx. +68° F (20° C).

PROCEDURE:

First of all, clean the body and chassis of the car thorouhly, thus ensuring that dust will not spread in the spraying booth or drying oven. The glasses for the tail lights, brake lights and back-up light, as well as the control relay for the Eberspächer BL2 ZW parking heater, must be removed to prevent them from being damaged by the heat.
The air inlets and air outlets from the passenger compartment must be masked.

Cover the insides of all glass windows with sheefs of board or the like to prevent the temperature from becoming too high.
Disconnect the battery cable and either lift the battery out or cover it with a sheet of board or the like.
Empty the fuel tank and remove the filler cap.
If the luggage-compartment lid, the hood, or an of the doors has to remain open, the opening must be masked ot prevent the air temperature inside the car from rising above +167° F (75° C).
When the car is being pretreated and painted it should be at normal room temperature. When the car is placed in the oven, the latter should have reached the prescribed temperature of 194—212° F (90—100° C).
Leave the car there for one hour.

B. AIR-DRYING TOUCH-UP ENAMEL (68—176°F or 20—80° C)

When air-drying enamel is used, no special arrangements are necessary other than a well heated, dustless booth. The drying time can, however, be speeded up considerably by stoving the enamel with an infrared radiation lamp or in an oven with an air temperature of not more than +176° F (80° C).
The enamel can be sprayed either hot or cold, and the viscosity should be adjusted accordingly with the thinner recommended by the paint supplier to the following:
Hot sprying — viscosity approx. 35 sec.
Cold spraying — viscosity approx. 21 sec.
Measure the viscosity with a beaker according to the method described in the Swedish standard SIS 16 00 11 at a temperature of approx. +68° F (20° C).
The metal must have adopted normal room temperature prior to pretreatment and painting.

NOTE

Under the chassis sign is a sign indicating by means of a code the original body color. Always quote this code when placing orders for touch-up enamel. This is particularly important as enamel conforming to the same color specification may be supplied by several different manufacturers.

General maintenance work

Proper care and maintenance of the care is necessary to retain the gloss and durability of the enamel finish and the protective properties of the underbody sealing. Recommendations in these respects are given in Chapter 1.

CONTENTS

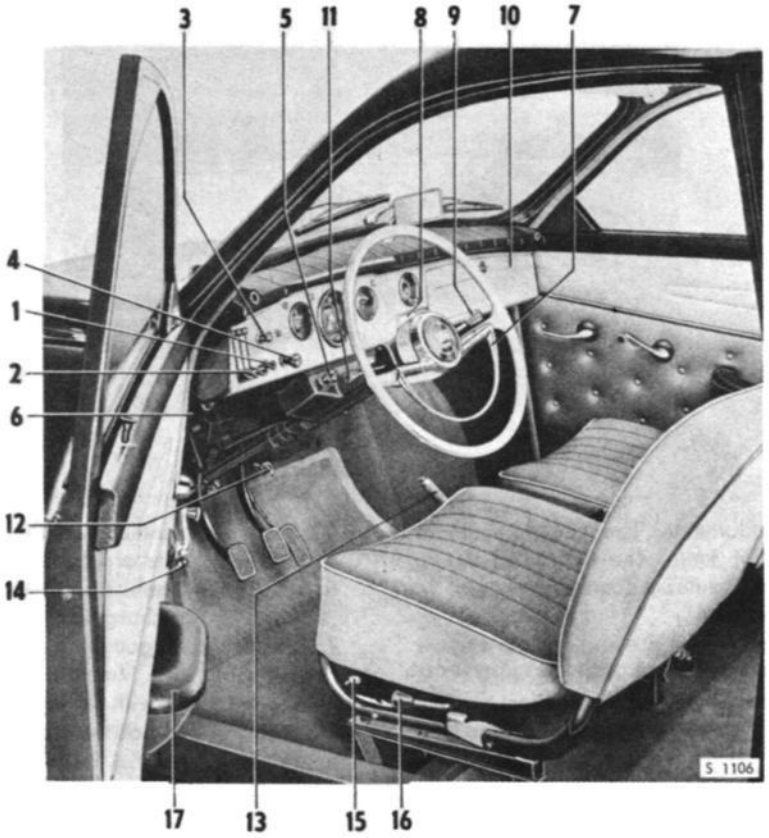

CONTROLS MODEL 1967

1. Switch for extra equipment. (USA, warning flasher switch).
2. Heating and ventilation controls.
3. Ventilator fan switch.
4. Switch for windshield wipers, 2 speeds, and windshield washer pump. To start the wipers, turn the knob clockwise. The first position is for low speed, and the second position for high speed. To wash the windshield, first pull the knob out, than let it go.
5. Switch for headlights and instrument panel lights. When the knob is pulled out to the first stop, the side and rear lights as well as the number plate light are lighted. Pulling the knob all the way out lights the headlights as well. When the knob is pulled in either position, the intensity of the instrument panel lights may be adjusted by turning the knob.
6. Hood lock.
   The hood hinges upwards and forwards towards the front of the car and is released in the following manner:
   a) Pull out the knob situated under the instrument panel. This opens the hood to the half-locked position.
   b) Push aside the lock mechanism which is situated at the main lock under the front part of the hood.
   c) Lift up the hood.
7. Horn button.
8. Ashtray. Also provided in rear passenger compartment.
9. Gear lever.
10. Lockable glove compartment. The door is provided with a detachable plate for the installation of a radio if desired.
11. Direction indicator switch and except USA versions headlight flasher.
12. Free wheel control. To lock out the free wheel action, pull the handle right out. See page 19.
13. Handbrake.
14. Dimmer switch.
15. Seat adjustment. When the catch is pressed down, the seat is released and can be moved forward or backward as desired.
16. Control for adjusting angle of seat backrest.
17. Armrest. This can be adjusted to three different positions by means of the fastening screws.

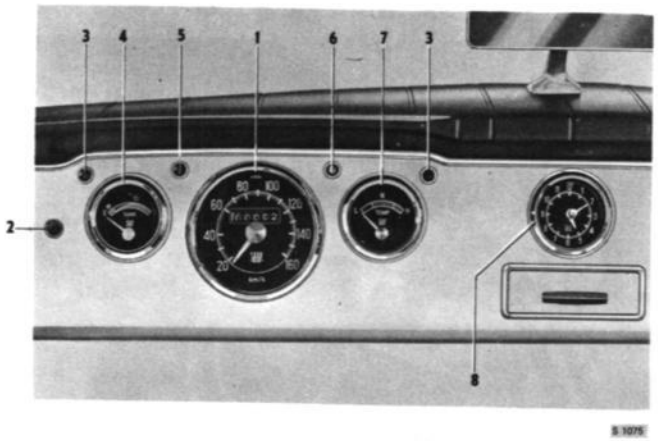

INSTRUMENTS MODEL 1967

1. Speedometer with odometer. The speedometer is graduated in m.p.h. or km/h. The odometer shows the distance covered in miles (kilometers).
2. Indicator light, oil pressure.
   The lamp glows when the oil pressure of the engine is too low. Never race the engine until the lamp is out. gone out. If the lamp begins to glow when driving the engine should be stopped immediately and the cause be traced.
3. Direction indicator repeating lights. Flash green in time with the indicators.
4. Fuel gauge. The amount of fuel ii the tank is shown when the ignition is switched on. An indicator light glows red when there is less than 1.5 Imp. gals. (7 lit.) left.
5. High beam indicator light; shows a blue light when the headlights are on with the beam undimmed.
6. Charge indicator light; glows orange when the alternator is not charging.
7. Temperature gauge. The green zone indicates normal operating temperature.
8. Electric clock with setting screw. The regulating screw is at the back of the clock.

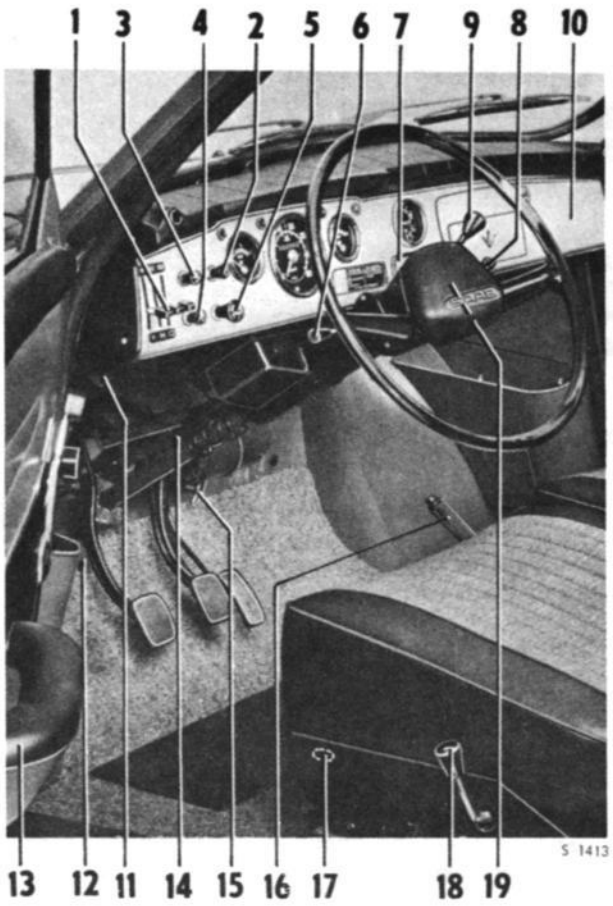

CONTROLS MODEL 1968

1. Heating and ventilation controls.
2. Switch for extra equipment.
3. Ventilator fan switch.
4. Rheostat for instrument illumination. The intensity of the instrument lights is adjusted by turning the knob clockwise, (functions only when the lights are on).
5. Switch for lighting units. In the first position, when pulling out the knob, the parking lights are on as well as the licence plate lights. In the second position, the knob pulled all the way out, also the headlights are switched on.
6. Direction indicator switch. Also functioning as switch for high beam headlight signal when the lever is moved towards the steering wheel.
7. Ashtray. Also provided in rear passenger compartment.
8. Switch for signal horn, windshield wipers/washer. Operation:
   a) The lever moved towards the steering wheel—signal horn activated. (Pos. 0—3.)
   b) Position 1. (See symbols)—windshield wipers, low speed.
   c) Position 2.—Windshield wipers, high speed.
   d) Position 3.—Windshield wipers, high speed and windshield washer.
9. Gear lever.
10. Lockable glove compartment. The lid is provided with a detachable plate for the installation of a radio if desired.
11. Hood lock.
    The hood hinges upwards and forwards towards the front of the car and is released in the following manner:
    a) Pull out the knob situated under the instrument panel. This opens the hood to the half-locked position.
    b) Push aside the lock mechanism which is situated at the main lock under the front part of the hood.
    c) Lift up the hood.
12. Dimmer switch.
13. Armrest. This can be adjusted to three different positions by means of the fastening screws.
14. Switch for brake warning light.
15. Free wheel control. To lock the free wheel action, pull the handle right out.
16. Handbrake.
17. Seat adjustment. When the catch is pressed down, the seat is released and can be moved forward or backward as desired.
18. Control for adjusting angle of seat backrest.
19. Fresh air ventilation lid. The lid may be opened by pushing the handle of the lid forward.

The interior rear-view mirror has two different positions of height. To adjust, turn the mirror half a turn.

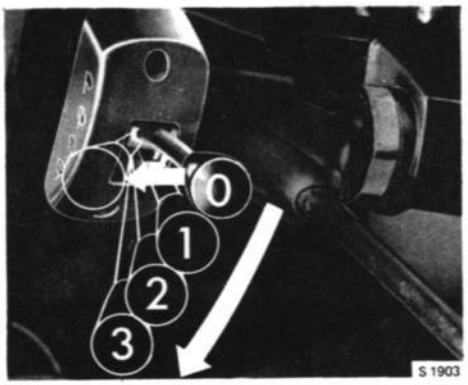

SWITCH FOR SIGNAL HORN AND WINDSHIELD WIPERS/WASHER

Signal horn: The lever to be moved towards the steering wheel. (Pos. 0—3)

0. Windshield wipers – neutral position
1. Windshield wipers – low speed
2. Windshield wipers – high speed
3. Windshield wipers – high speed and washer

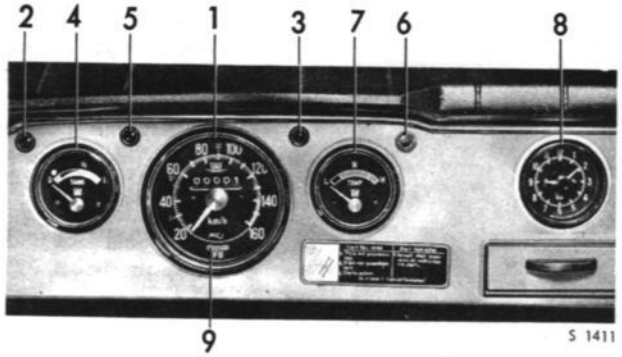

INSTRUMENTS MODEL 1968

1. Speedometer with odometer. The speedometer is graduated in m.p.h. or km/h. The odometer shows the distance covered in miles (kilometers).
2. Indicator light, oil pressure.
   The lamp glows when the oil pressure of the engine is too low. Never race the engine until the lamp is out. If the lamp begins to glow when driving the engine should be stopped immediately and the cause be traced.
3. Direction indicator repeating light. Flashes green in time with the indicators.
4. Fuel gauge. The amount of fuel in the tank is shown when the ignition is on. An indicator light glows red when there is less than 1.5 Imp. gals. (7 lit.) left.
5. High beam indicator light. Shows a blue light when the headlights are on with the beam undimmed.
6. Charge indicator light. Glows orange when the alternator is not charging.
7. Temperature gauge. The green zone indicates normal operating temperature.
8. Electric clock with setting screw. The regulating screw is at the back of the clock. (De Luxe version only.)
9. Brake warning light will glow red as soon as the brake pedal travel becomes too large due to any of the following faults:
   a) Leakage on one of the brake system circuits.
   b) Rear brakes need adjustment.
   If the warning light glows an authorized Saab Service garage should be consulted for investigation and necessary remedy.

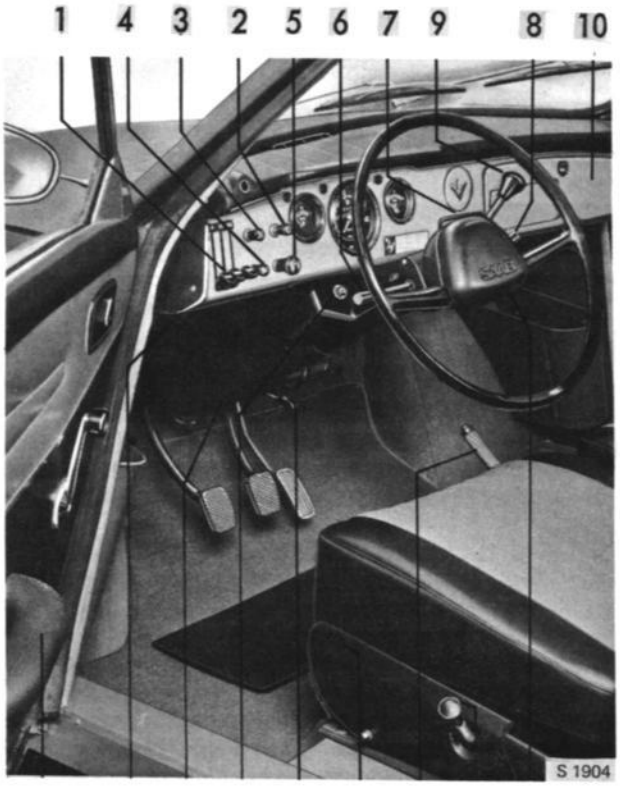

CONTROLS MODEL 1969

1. Heating and ventilation controls.
2. Switch for extra equipment.
3. Ventilator fan switch.
4. Rheostat for instrument illumination. The intensity of the instrument lights is adjusted by turning the knob clockwise, (functioning only when the lights are on).
5. Switch for lighting units. In the first position, when pulling out the knob, the parking lights are on as well as the licence plate lights. In the second position, the knob pulled all the way out, also the headlights are switched on.
6. Direction indicator switch. Also functioning as dimmer switch and switch for high beam headlight signal when the lever is moved towards the steering wheel.
7. Ashtray. Also provided in rear passenger compartment.
8. Switch for signal horn, windshield wipers/washer. Operation:
   a) The lever moved towards the steering wheel – signal horn activated.
   b) Position 1. (See symbols) – windshield wipers, low speed.
   c) Position 2. – Windshield wipers, high speed.
   d) Position 3. – Windshield wipers, high speed and windshield washer.
9. Gear lever. For position.
   The back-up light on the SAAB V4 station wagon is automatically lighted when the reverse gear is engaged.
10. Locking glove compartment. The lid is provided with a detachable plate for installation of a radio if desired.
11. Hood lock.
    The hood hinges upwards and forwards towards the front of the car and is released in the following manner:
    a) Pull out the knob situated under the instrument panel. This opens the hood to the halv-locked position.
    b) Push aside the safety latch which is situated at the main lock under the front part of the hood.
    c) Lift up the hood.
12. Warning flasher switch. When the knob is pulled out, all the direction indicator lights and connected indicator lights are flashing. The warning flasher must be used only in case of an accident, a breakdown or similar and provided the car stands on the road endangering or hindering the traffic.
13. Armrest. This can be adjusted to two different positions by means of the fastening screws.
14. Switch for brake warning light.
15. Free wheel control. To lock the free wheel action, pull the handle right out.
16. Handbrake.
17. Seat adjustment. When the catch is pressed down, the seat is released and can be moved forward or backward as desired.
18. Control for adjusting angle of seat backrest.
19. Fresh air ventilation lid. The lid may be opened by pushing the handle of the lid forward.

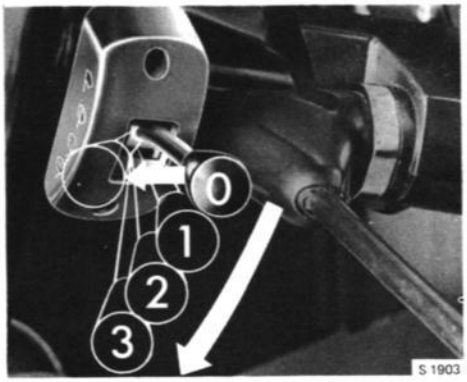

SWITCH FOR SIGNAL HORN AND WINDSHIELD WIPERS/WASHER

Signal horn: The lever to be moved towards the steering wheel. (Pos. 0–3)

0. Windshield wipers – neutral position
1. Windshield wipers – low speed
2. Windshield wipers – high speed
3. Windshield wipers – high speed and washer

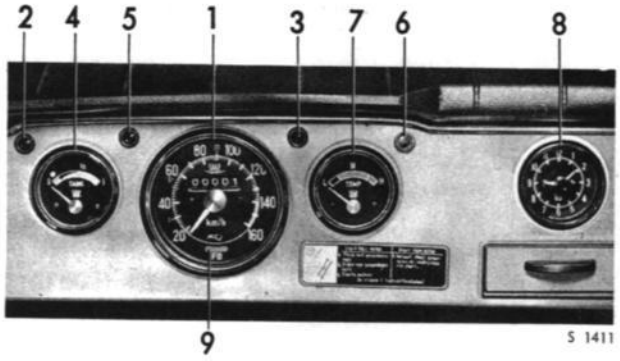

INSTRUMENTS MODEL 1969

1. Speedometer with odometer. The speedometer is graduated in m.p.h. or km/h. The odometer shows the distance covered in miles (km).
2. Indicator light, oil pressure.
   The lamp glows when the oil pressure of the engine is too low. Never race the engine until the lamp is out.
   If the lamp begins to glow when driving, the engine should be stopped immediately and the cause be traced.
3. Direction indicator repeating light. Flashes green in time with the indicators.
4. Fuel gauge. The amount of fuel in the tank is shown when the ignition is switched on. An indicator light glows red when there is less than 1.5 Imp. gals (7 lit.) left.
5. High beam indicator light. Shows a blue light when the headlights are on with the beam undimmed.
6. Charge indicator light. Glows orange when the alternator is not charging.
7. Temperature gauge. The green zone indicates normal operating temperature.
8. Electric clock with setting screw. The regulating screw is at the back of the clock. (De Luxe version only.)
9. Brake warning light will glow red as soon as the brake pedal travel becomes too large due to any of the following faults:
   a) Leakage in one of the two brake system circuits.
   b) Rear brakes need adjustment.
   If the warning light glows, the cause should be traced, and then the eventual fault remedied by an authorized service garage.

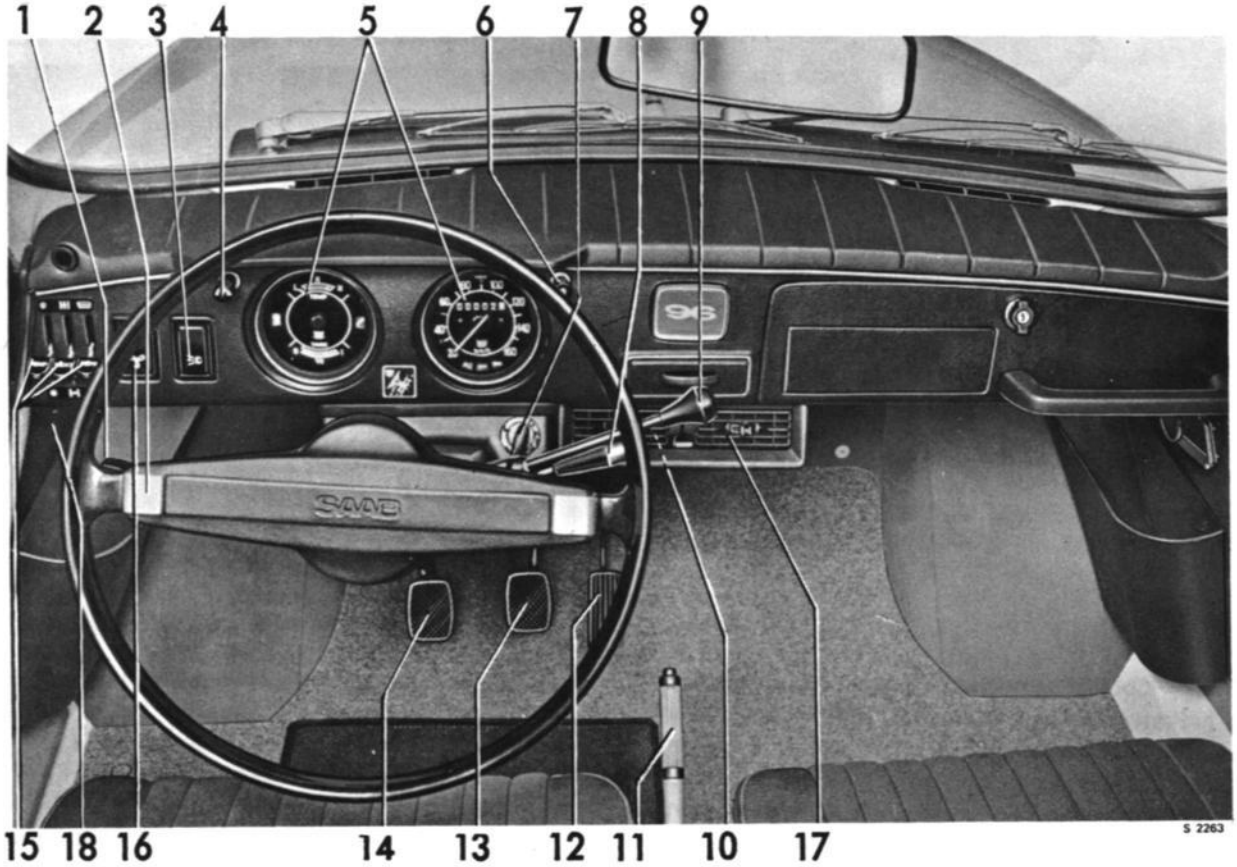

CONTROLS AS FROM MODEL 1970

1. Combined direction indicator lever and headlight dimmer and flasher switch.
2. Horn control.
3. Headlight and parking light switch. Flicking the switch to first position turns on the parking lights, irrespective of the ignition switch position. Flicking to second position turns on the headlights as well. As from model 1971, the switch is provided with a catch to prevent unintentional switching off.
4. Hazard warning signal switch. All direction indicator lights flash together when the button is pulled out. The hazard warning signal must only be used when the vehicle is stalled in the roadway, e.g. after an accident or breakdown, in a position where it is liable to endanger or obstruct traffic.
5. Instruments and indicator lights.
6. Instrument lighting rheostat. Turn the switch to control the intensity of illumination. This switch operates only when the parking lights or headlights are on.
7. Combined ignition switch and gear lever lock.
8. Windshield wiper and washer control.
   a) The lever to be moved towards the steering wheel: Windshield washer.
   b) Pos. 1 – windshield wipers, low speed
   c) Pos. 2 – windshield wipers, high speed
   d) Pos. 3 – windshield wipers, high speed and windshield washer.
   Headlight wiper and washer, see group 3, section 364.
9. Lever.
10. Free wheel drive control. To lock the free wheel pull the handle fully.
11. Handbrake.
12. Accelerator pedal.
13. Brake pedal.
14. Clutch pedal.
15. Heating and ventilation controls.
16. Ventilator fan switch.
17. Fresh-air vent with control.
18. Hood lock release handle. The handle is located on the left-hand side under the instrument panel. The hood opens forward.
    To open, proceed as follows:
    a) Pull the handle. The hood will then open to the semilocked position, retained by a safety catch at the leading edge.
    b) Press the front of the hood down slightly and push back the safety catch. The front can now spring up, and you can open the hood by lifting the rear end.

The interior rear-view mirror has two different positions of height. To adjust, turn the mirror half a turn.

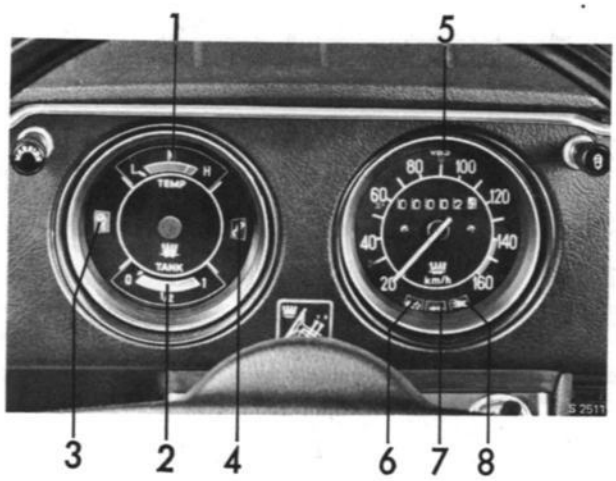

INSTRUMENTS AS FROM MODEL 1970

1. TEMP Coolant temperature gauge. The green zone indicates normal operating temperature.
2. TANK Fuel gauge. Indicates the amount of fuel in the tank when the ignition is switched on. A red warning light comes on when there are less than 1 3/4 US gallons (7 liters) left in the tank.
3. Charge indicator light. Glows orange when the alternator is not charging.
4. Oil pressure warning light. Glows when engine oil pressure is too low. When starting, never race the engine until the lamp is out. If it lights up when you are driving, switch off the engine immediately and investigate the cause.
5. Speedometer and odometer. The speedometer is graduated in MPH and the odometer shows the total mileage of the vehicle.
6. Brake warning light. Glows red to indicate excessive brake pedal stroke, which means:
   a) one of the two brake line circuits is leaking, or
   b) the back wheel brakes need adjusting.
   If this light comes on, investigate the cause of the trouble without delay and have the fault repaired by an authorized SAAB service shop.
7. Direction indicator repeater light. Flashes green in time with the direction indicators.
8. High beam warning light. Glows blue when the headlights are on high beam.

INSTRUMENTS

Speedometer and mileage recorder Removal and installation

Since the speedometer and mileage recorder form an independent unit, removal and installation can be carried out without interfering with any of the other instruments in the cluster.

1. Disconnect the cables to the earth terminal, withdraw the lampholders together with their connection wires, and disconnect the speedometer drive cable.
2. Saab 96 and Saab Sport: Back off the knurled center nut retaining the bezel. Saab 95: Back off the two knurled nuts retaining the bezel.
3. Remove the instrument from the panel.
4. Install in the reverse order, making sure that the stamped mark or line on the periphery of the housing coincides with the notch in the hole for the instrument in the panel.

Repairs and adjustments of the speedometer and mileage recorder should always be entrusted to a specialist firm.

Speedometer drive cable

When handling the speedometer drive cable, never coil it in rings with a diameter of less than about 12 inches (300 mm). Otherwise, there is a risk of damaging the flexible inner wire, which might lead to unwanted noise after installing.

When fitting the speedometer drive cable, note the following points:

1. Release the dash-panel trim at the hole where the cable enters through the dash panel.
2. Secure the upper nut to the speedometer drive cable with adhesive tape and then pass the cable up from the engine compartment and through the hole in the dash panel.
3. When fitting the cable, take care to arrange it smoothly, without any sharp bends.

As from model 1970 the speedometer cable is equipped with a bayonet fitting.

Fuel and temperature gauges, clock

General

These instruments are independent units and can be removed separately from the instrument panel by disconnecting the wires and removing the retaining clips.

Instrument lighting and indicator lights as from model 1970

All the bulbs in the instrument panel are mounted in bayonet fittings and are accessible from the back of the panel.

Repairs and adjustments of any of these instruments should always be entrusted to a specialist firm.

Revolution counter

General

The Monte Carlo is equipped with an electric revolution counter, connected to the ignition primary circuit. See the wiring diagram in Section 3. When installing a revolution counter in, for instance, a Saab 96, follow the wiring diagram below.

CAUTION

Do not confuse plus and minus leads, or the instrument may get ruined.

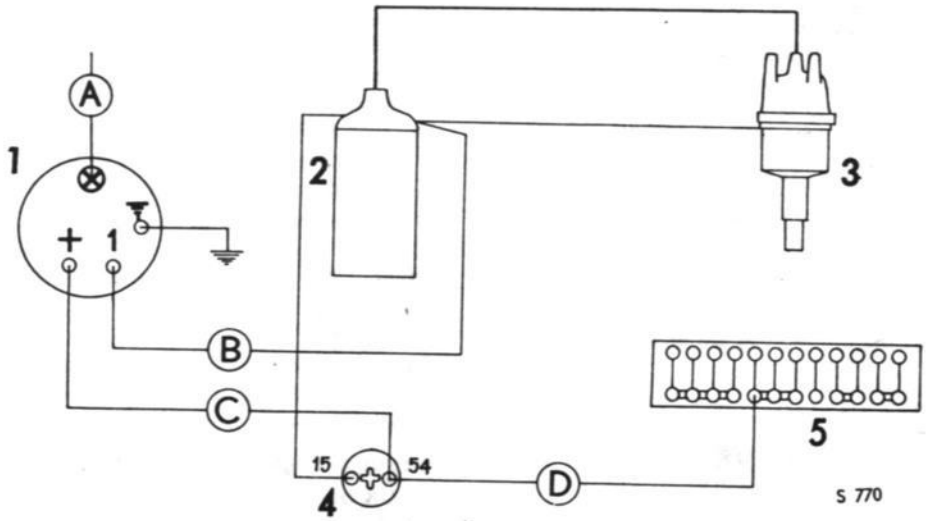

WIRING DIAGRAM FOR FITTING AN ELECTRIC REVOLUTION COUNTER

1. Rev. counter
2. Ignition coil
3. Distributor
4. Ignition switch
5. Fuse block

A. Instrument-lighting lead.
B. Lead between ig. coil and terminal 1 on counter.
C. Lead between terminal 54 on ig. switch and plus lead on rev. counter.
D. Outgoing lead from ig. switch to fuse block.

MECHANICAL ACCESSORIES

Seat belts

All cars are equipped with safety belts of the so colled three points type and as from model 1968 on, the belts are of the yoke type. When not used, the strap of the 3-point type is hung on a hook at the door pillar.

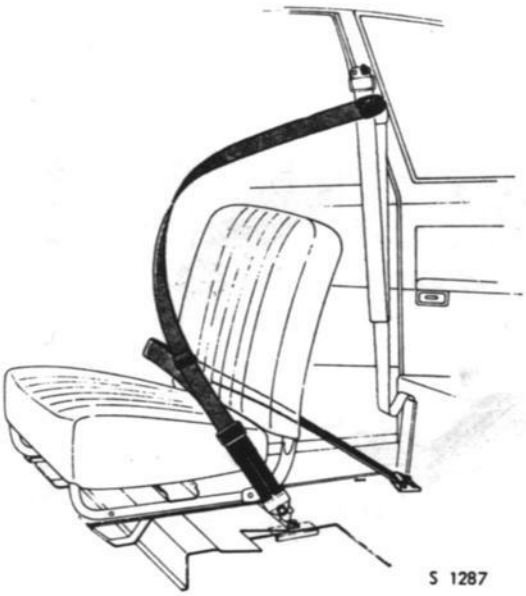

SAFETY BELT, 3-POINT TYPE UP TO AND INCLUD. THE 1967 MODEL

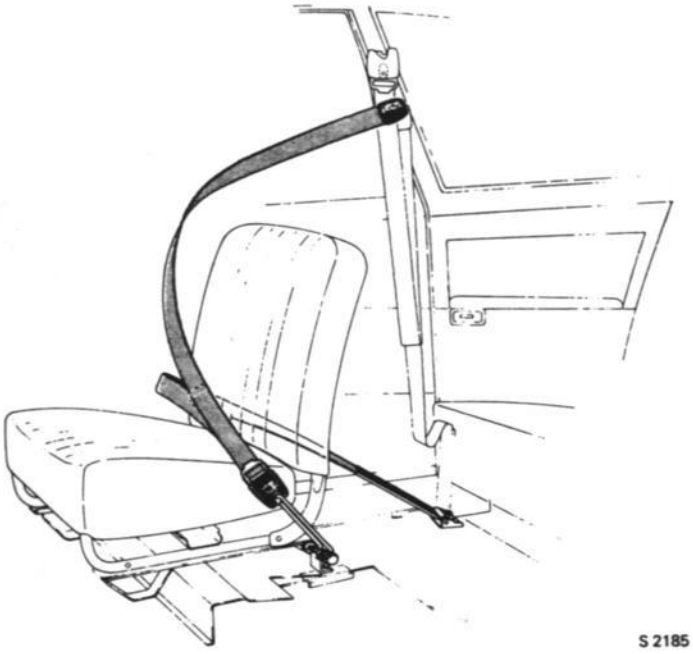

SAFETY BELT, 3-POINT TYPE, AS FROM THE 1968 MODEL

ELECTRICAL ACCESSORIES

Radio installation
Installation

The most convenient site in which to install the radio receiver is in the space provided in the glove compartment.

L.H.-Drive car

Remove the panel in the glove compartment door and place the receiver in the glove compartment on the lefthand side. It may be necessary to cut out a hole in the bottom, corresponding to the width of the receiver. See fig.

R.H.-Drive car

The receiver is placed on the lefthand side in the glove compartment and the upper part of the front panel of the receiver must be cut off. See fig. A hole is cut out in the bottom of the glove compartment, corresponding to the width of the receiver.
A rectangular hole is made in the door of the glove compartment for the dial and controls of the receiver. See fig.

Location of antenna

It is appropriate to locate the antenna on the left fender in order to come as far away as possible from the ignition coil.
When fitting a radio and antenna, the supplier's instructions should be followed.
Instructions concerning suppression measures are given in chapter 3.

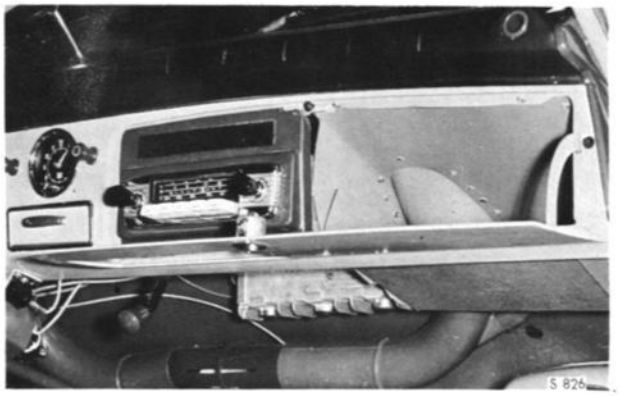

RADIO INSTALLATION L.H.D. CAR

Electrical accessories

General

The radio and any other electrical accessories, such as extra lights, etc., must be properly fused off and should therefore be connected to the ignition switch or to the fuse block on the dash panel, which is provided with spare fuse for this purpose.
The wiring for electrical accessories should be so dimensioned as to ensure the least possible voltage drop. As a general rule, the following applies:
Current consumption less than 8 A (96 W): use a wire with a sectional area of 0.002 sq.in. (1.5 sq.mm).
Current consumption more than 8 A (96 W): use a wire with a sectional area of 0.003 sq.in. (2.5 sq.mm).
For all connections and splices made when installing electrical accessories, use AMP crimped terminals. See further details in Chapter 3.

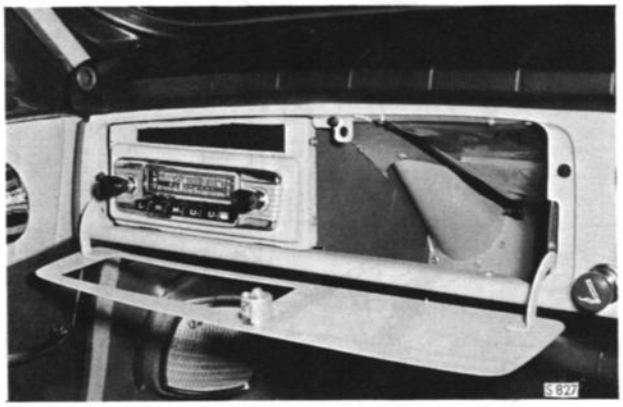

RADIO INSTALLATION R.H.D. CAR

LOCATION OF ANTENNA

FRESH-AIR HEATER

General

The heating system is separate and connected to the cooling system. Through the fresh air intake (17) in front of the windshield, air enters a "collector box (16). The air goes through a channel via the fan wheel (19) to the heat exchanger (11) from where it is led into the passenger compartment. The fan and heat exchanger has a common casing. The air is heated when passing the from the cooling liquid heated heat exchanger the temperature of which can be varied by the thermostat valve (22). The thermostat bulb is located in the current of air injected into the passenger compartment. The amount and distribution of air to the passanger compartment is controlled by air distributors (20) via controls. The current of air can either be led to the floor or through the defroster jets, or both ways at the same time.

As from model 1971 the cars are equiped with air channels to the floor space in the rear seat.

When the road speed exceeds 30 m.p.h. (50 km/h), the speed wind is generally sufficient to ensure satisfactory function of the heat exchanger. The best effect of the heating system is obtained with closed windows.

On hot summer days, driving comfort may be improved by using the fan to draw fresh air into the car. Needless to say, the control lever should then be set at cold.

The heat exchanger is fitted with a bleed nipple (12), with which the exchanger is to be bled whenever the cooling system is refilled.

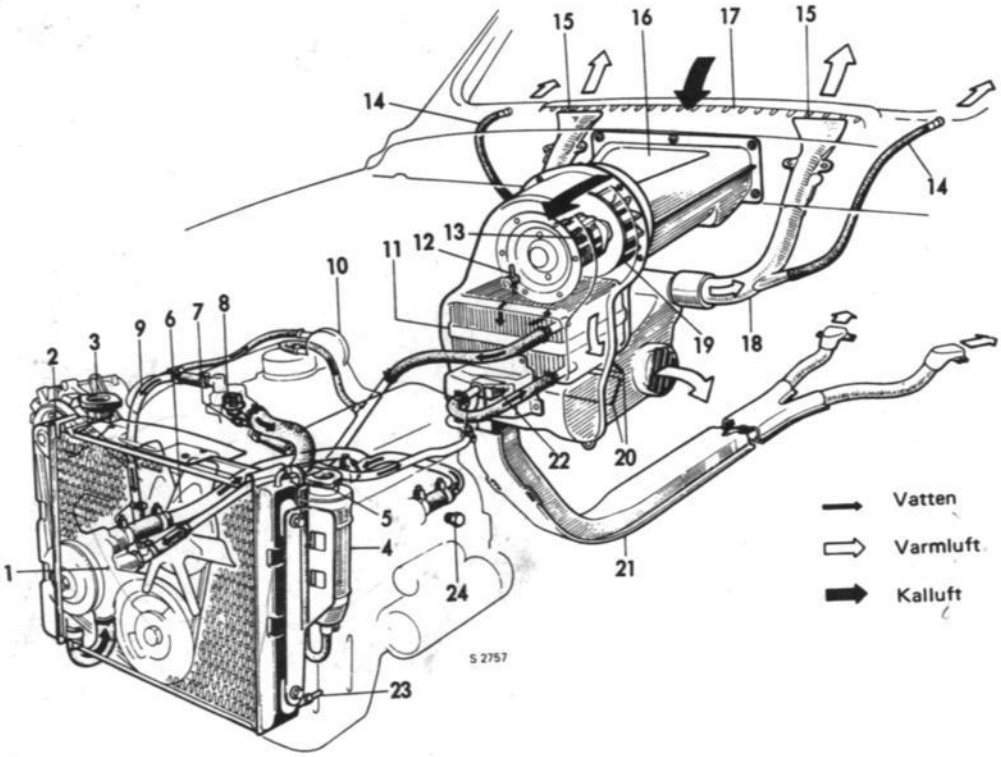

HEATING SYSTEM, PRINCIPLE

1. Water pump
2. Radiator
3. Radiator cap
4. Expansion tank
5. Pressure cap
6. Fan
7. Temperature transmitter
8. Thermostat
9. By-pass
10. Water jacket, automatic choke
11. Heat exchanger
12. Bleeding nipple
13. Fan motor
14. Side defroster hose
15. Defroster jet
16. Collector box
17. Fresh-air intake
18. Defroster pipe
19. Fan wheel
20. Air distributor
21. Air channel to rear floor (as from model 1971)
22. Thermostat valve
23. Drain valve
24. Drain plugs (one on each side)

Removal and installation of fan motor

1. Disconnect the three cables from the fan motor, noting their respective locations.
2. Back off and remove the six screws retaining the front cover of the fan housing.
3. Pull out the cover, together with the fan motor.
4. Remove the nuts holding the motor to the front cover. The fan motor and impeller are balanced together in order to ensure vibrationfree running. An exchange system is operative in respect of the complete fan unit Reinstall in the reverse order.

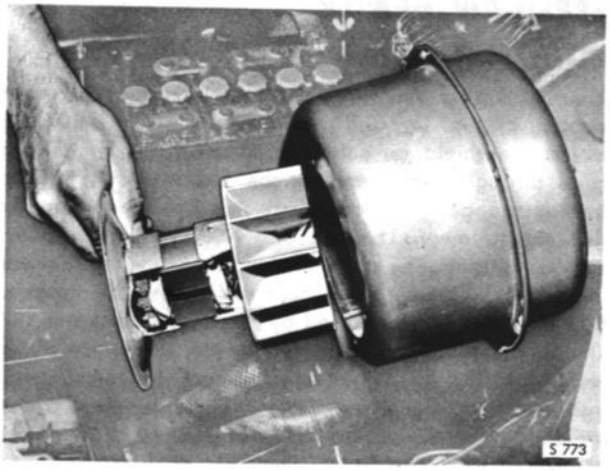

REMOVAL OF FAN MOTOR

Removal and installation of heat exchanger

1. Drain off the cooling water and disconnect the two hoses from the heat exchanger.
2. Disconnect the three cables from the fan motor, noting their respective locations.
   Back off and remove the six screws retaining the front cover of the fan housing. Lift out the fan motor.
3. Back off the screws holding together the fan-housing casings. Eight screws are accessible from the engine compartment and two nuts from inside the car. To provide access to these two nuts, fold back the rubber mat, unscrew the freewheel control handle and remove the two trim clips, whereupon the insulation can be turned back from the cowl plate and the nuts removed.
4. Pull the front part of the fan-housing casing out so far as to allow removal of the heat exchanger. See fig. Note: Proceed with care, to avoid damaging the thermostat bulb. Before refitting the heat exchanger. check that the sealing rings on the water pipe are in place. Install the heat exchanger in the reverse order. Then refill the cooling system with water and check the hose connections for leaks.

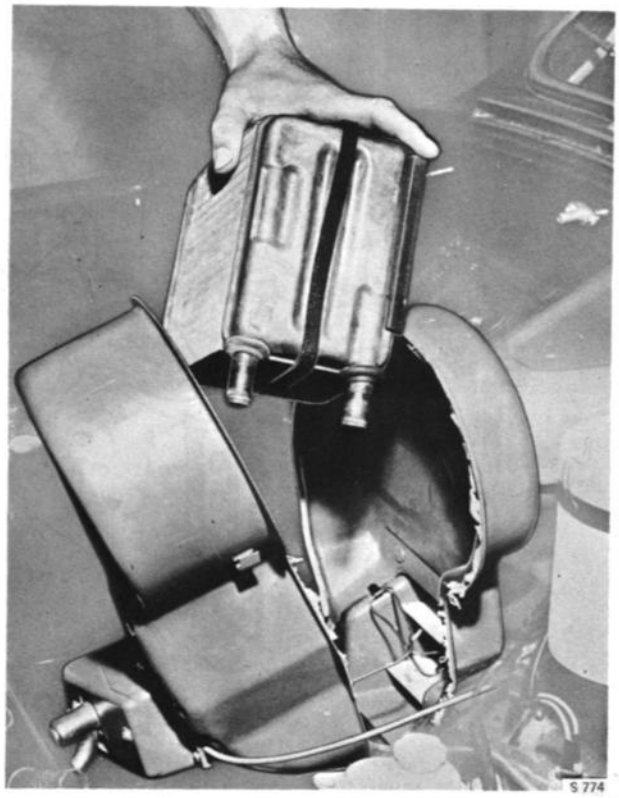

REMOVAL OF HEAT EXCHANGER

Removal and installation of heater thermostat valve

1. Drain off the cooling water and disconnect the hoses from the heat exchanger and thermostat valve.
2. Divide the throttle linkage at the rubber joint and pull the shaft out of the thermostat-valve casing.
3. Remove the four screws holding the thermostat-valve casing to the fan-housing casing.
4. Remove the three cables from the fan motor, noting their respective locations.
   Back off and remove the six screws retaining the front cover of the fan housing. Lift out the fan motor — see fig.
5. Back off and remove the screws holding together the fan-housing casings. Eight screws are accessible from the engine compartment and two nuts from inside the car. To provide access to these two nuts, turn back the rubber mat, unscrew the freewheel control handle and remove the two trim clips, whereupon the insulation can be turned back from the cowl plate and the nuts removed.
6. Pull out the front part of the fan-housing casing and lift out the heat exchanger. Disconnect the thermostat coil by bending up the sheet-metal tabs on the inside of the heater casing. See fig.
   Remove the control and protective casing (2 screws) from the thermostat valve. The valve can now be removed.
   Reinstall the thermostat valve in the reverse order. Then refill the cooling system with water and check the hose connections for leaks.

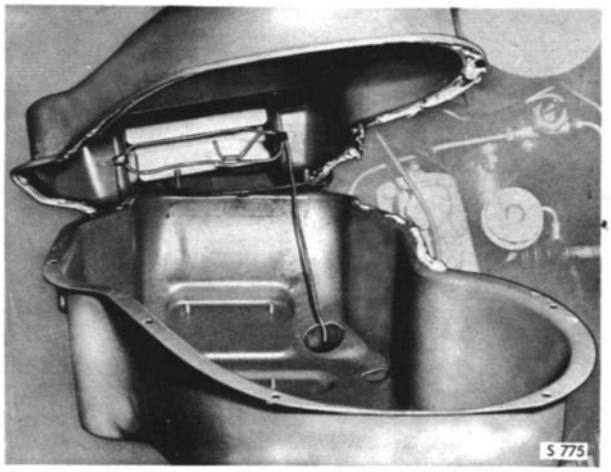

SEPARATING THE HEATER CASING

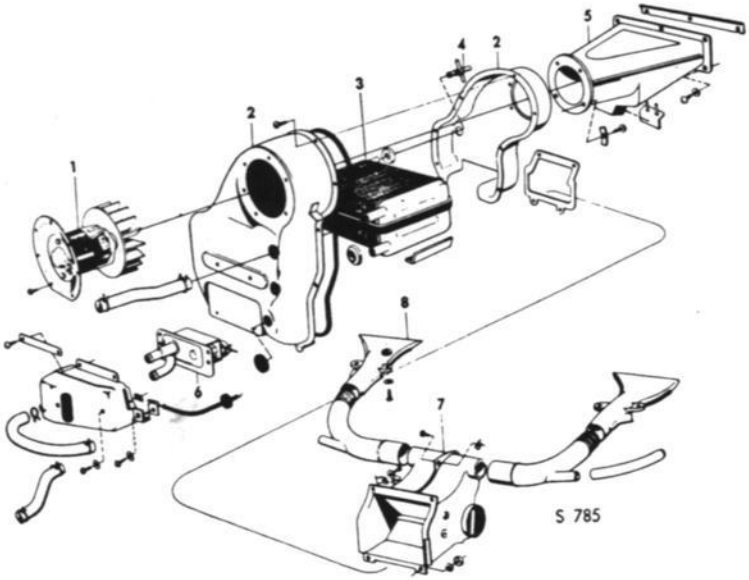

HEATER

1. Fan and motor
2. Casings
3. Heat exchanger
4. Bleeder screw
5. Fresh-air duct
6. Thermostat valve
7. Damper housing
8. Defroster jet

Notes